The Available Solution

PARAMAX® 9000

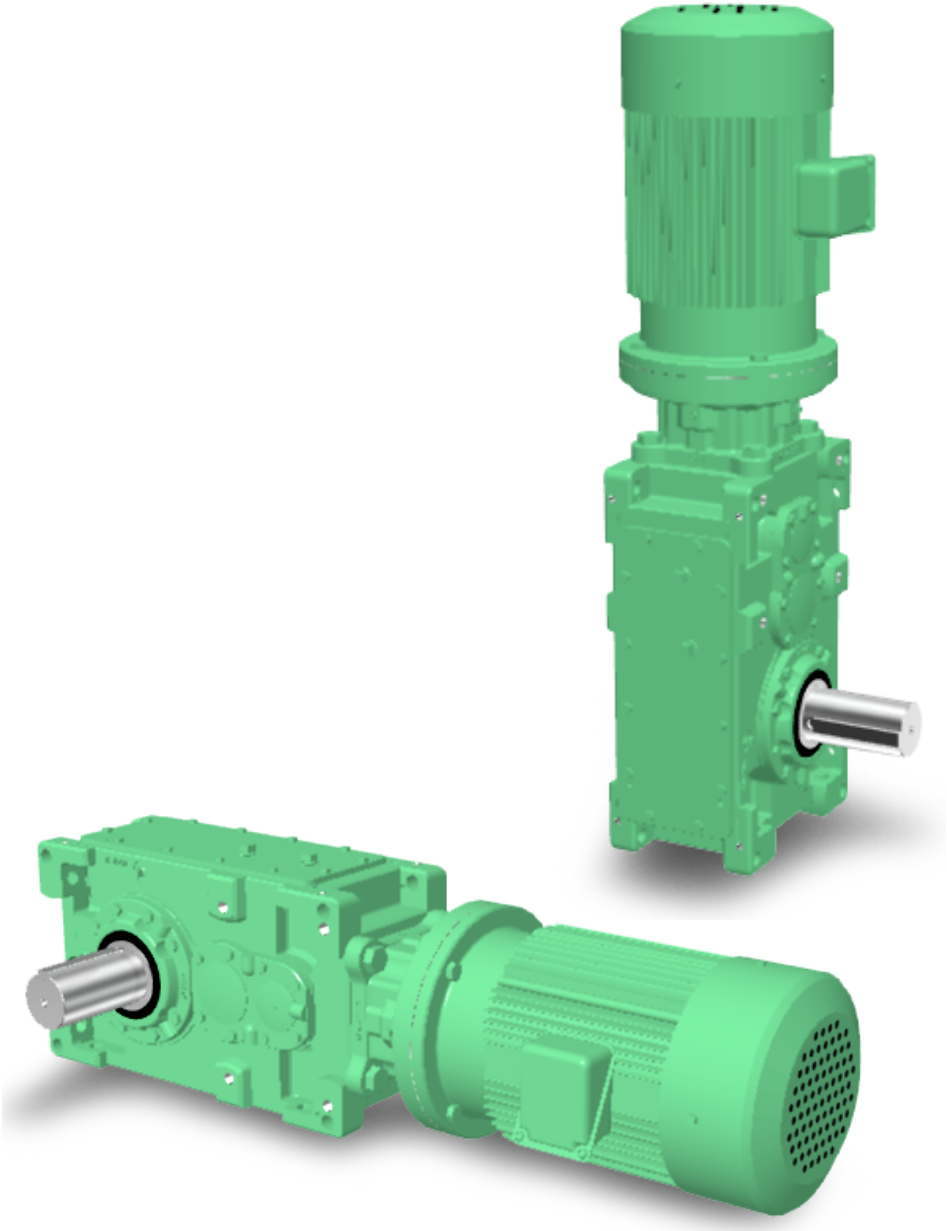

Sumitomo Heavy Industries, Ltd.

More Competitive

JUST FIT SIZE

24 sizes variation for most accurate economical selection.

Prepared full range 24 sizes variation.
Fitness size selection available for every requested torque.
Customer's wide design availability with most accurate economical selection.

Size	OutputTorque	Size	OutputTorque	Size	OutputTorque
9015	2.6	9070	38.2	9110	174
9025	4.2	9075	47.8	9115	207
9030	6.4	9080	58.5	9118	260
9035	8.5	9085	73.1	9121	301
9040	10.1	9090	85.9	9126	351
9050	15.3	9095	101	9128	420
9055	19.9	9100	122	9131	473
9060	24.4	9105	144	9136	552

【kNm】

NEW DESIGN CONCEPT

Direct motor mount for right angle type also standardized.

Direct motor mount design of right angle type is standardized.
It have a number of outstanding features.

1. No input coupling
2. No coupling alignment required
3. Compact drive assembly

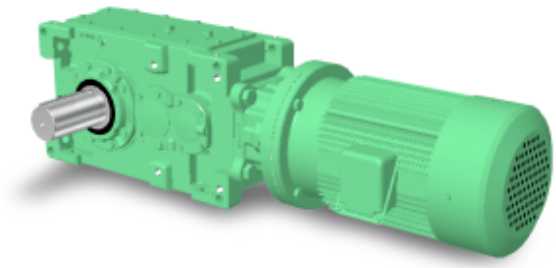

LARGERTHERMALCAPACITY

Advanced thermal capacity by new designed fan cooling system. (Option)

New designed fan and conduct air cowling gain larger thermal capacity.
This system benefit for severe situation like continuous operation, even if compact size.

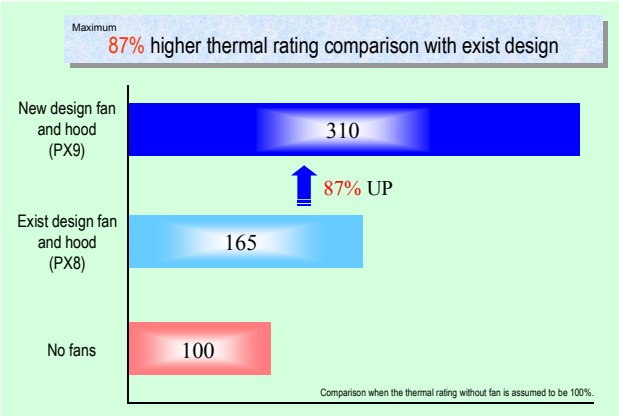

High Quality

LOW NOISE

Low noise resulting from optimized gear tooth profile modification and rigid housing design.

FEM analysis used to maximize housing strength and rigidity, so maintaining correct gear alignment and bearing loading.

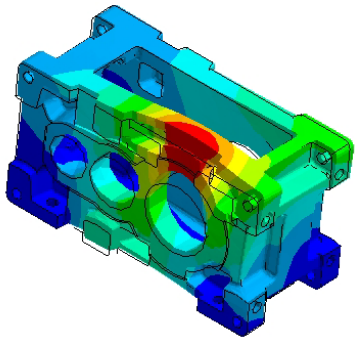

FEM Analysis

HIGH TOOTH STRENGTH

25 deg Pressure angle

In comparison with ordinary pressure angle (20 deg), 25 deg pressure angle permits a thooth from with thicker dedendum.
This translates into higher thooth strength rating, an essential feature for shock load applications.

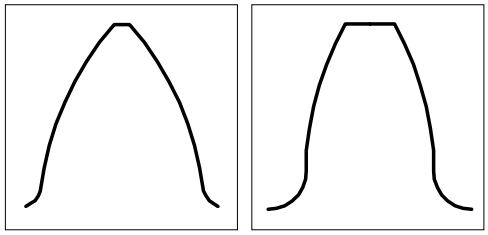

25 deg Pressure Angle 20 deg Pressure Angle

UNIVERSAL HOUSING

Horizontal, vertical or upright mounting - All use the same housing.

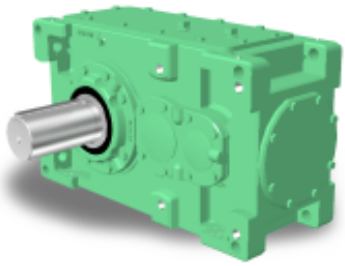

Horizontal mounting

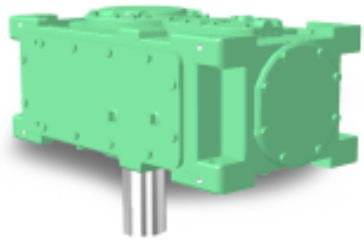

Vertical mounting

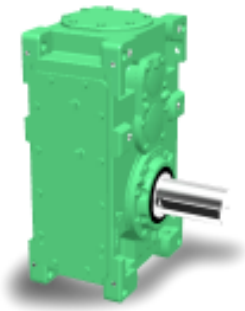

Upright mounting

AVAILABLE COMBINATION

Drive Unit : Right Angle

Ratio		6.3	7.1	8	9	10	11.2	12.5	14	16	18	20	22.4	25	28	31.5	35.5	40	45	50	56	63	71
0/P speed r/min	60Hz	286	254	225	200	180	161	144	129	113	100	90	80	72	64	57	51	45	40	36	32	29	25
	50Hz	238	211	188	167	150	134	120	107	94	83	75	67	60	54	48	42	38	33	30	27	24	21
Motor (kW x P)	5.5×4															○	○	○	○	○	○	○	○
	7.5×4														○	○	○	○	○	○	○	○	○
	11×4									○	○	○	○	○	○	○	○	○	○	○	○	○	○
	15×4							○	○	○	○	○	○	○	○	○	○	○	○	○	○	○	○
	18.5×4					○	○	○	○	○	○	○	○	○	○	○	○	○	○	○	○	○	○
	22×4	○	○	○	○	○	○	○	○	○	○	○	○	○	○	○	○	○	○	○	○	○	○
	30×4	○	○	○	○	○	○	○	○	○	○	○	○	○	○	○	○	○	○	○	○	○	○
	37×4	○	○	○	○	○	○	○	○	○	○	○	○	○	○	○	○	○	○	○	○	○	○
	45×4	○	○	○	○	○	○	○	○	○	○	○	○	○	○	○	○	○	○	○	○	○	○
	55×4	○	○	○	○	○	○	○	○	○		○	○	○	○	○	○	○	○	○	○	○	○

Drive Unit : Parallel

Ratio		6.3	7.1	8	9	10	11.2	12.5	14	16	18	20	22.4	25	28	31.5	35.5	40	45	50	56	63	71
0/P speed r/min	60Hz	286	254	225	200	180	161	144	129	113	100	90	80	72	64	57	51	45	40	36	32	29	25
	50Hz	238	211	188	167	150	134	120	107	94	83	75	67	60	54	48	42	38	33	30	27	24	21
Motor (kW x P)	5.5×4								○	○	○	○	○	○	○	○	○	○	○	○	○	○	○
	7.5×4						○	○	○	○	○	○	○	○	○	○	○	○	○	○	○	○	○
	11×4		○	○	○	○	○	○	○	○	○	○	○	○	○	○	○	○	○	○	○	○	○
	15×4	○	○	○	○	○	○	○	○	○	○	○	○	○	○	○	○	○	○	○	○	○	○
	18.5×4	○	○	○	○	○	○	○	○	○	○	○	○	○	○	○	○	○	○	○	○	○	○
	22×4	○	○	○	○	○	○	○	○	○	○	○	○	○	○	○	○	○	○	○	○	○	○
	30×4	○	○	○	○	○	○	○	○	○	○	○	○	○	○	○	○	○	○	○	○	○	○
	37×4	○	○	○	○	○	○	○	○	○	○	○	○	○	○	○	○	○	○	○	○	○	○
	45×4	○	○	○	○	○	○	○	○	○	○	○	○	○	○	○	○	○	○	○	○	○	○
	55×4	○	○	○	○	○	○	○	○	○	○	○	○	○	○	○	○	○	○	○	○	○	○
	75×4	○	○	○	○	○	○	○	○	○	○	○	○	○	○	○	○	○	○	○	○	○	○
	90×4			○	○	○	○	○	○	○	○	○	○	○	○	○	○	○	○	○	○	○	○
	110×4						○	○	○	○	○	○	○	○	○	○	○	○	○	○	○	○	○

Reducer

Ratio		6.3	7.1	8	9	10	11.2	12.5	14	16	18	20	22.4	25	28	31.5	35.5	40	45	50	56	63	71
SIZE	9015	○	○	○	○	○	○	○	○	○	○	○	○	○	○	○	○	○	○				
	9025	○	○	○	○	○	○	○	○	○	○	○	○	○	○	○	○	○	○				
	9030	○	○	○	○	○	○	○	○	○	○	○	○	○	○	○	○	○	○	○	○	○	○
	9035			○	○	○	○	○	○	○	○	○	○	○	○	○	○	○	○	○	○	○	○
	9040	○	○	○	○	○	○	○	○	○	○	○	○	○	○	○	○	○	○	○	○	○	○
	9050	○	○	○	○	○	○	○	○	○	○	○	○	○	○	○	○	○	○	○	○	○	○
	9055			○	○	○	○	○	○	○	○	○	○	○	○	○	○	○	○	○	○	○	○
	9060	○	○	○	○	○	○	○	○	○	○	○	○	○	○	○	○	○	○	○	○	○	○
	9070	○	○	○	○	○	○	○	○	○	○	○	○	○	○	○	○	○	○	○	○	○	○
	9075			○	○	○	○	○	○	○	○	○	○	○	○	○	○	○	○	○	○	○	○
	9080	○	○	○	○	○	○	○	○	○	○	○	○	○	○	○	○	○	○	○	○	○	○
	9085			○	○	○	○	○	○	○	○	○	○	○	○	○	○	○	○	○	○	○	○
	9090	○	○	○	○	○	○	○	○	○	○	○	○	○	○	○	○	○	○	○	○	○	○
	9095		○	○	○	○	○	○	○	○	○	○	○	○	○	○	○	○	○	○	○	○	○
	9100	○	○	○	○	○	○	○	○	○	○	○	○	○	○	○	○	○	○	○	○	○	○
	9105		○	○	○	○	○	○	○	○	○	○	○	○	○	○	○	○	○	○	○	○	○
	9110	○	○	○	○	○	○	○	○	○	○	○	○	○	○	○	○	○	○	○	○	○	○
	9115		○	○	○	○	○	○	○	○	○	○	○	○	○	○	○	○	○	○	○	○	○
	9118													○		○	○	○	○	○	○	○	○
	9121														○	○	○	○	○	○	○	○	○
	9126														○	○	○	○	○	○	○	○	○
	9128														○	○	○	○	○	○	○	○	○
	9131												○	○	○	○	○	○	○	○	○	○	○
	9136												○	○	○	○	○	○	○	○	○	○	○

80	90	100	112	125	140	160	180	200	224	250	280	315	355	400	450	500	Ratio	
23	20	18	16	14	13	11	10	9.0	8.0	7.2	6.4	5.7	5.1	4.5	4.0	3.6	60Hz	0/P speed r/min
19	17	15	13	12	11	9.4	8.3	7.5	6.7	6.0	5.4	4.8	4.2	3.8	3.3	3.0	50Hz	
○	○	○	○	○	○	○	○	○	○	○	○	○	○	○	○	○	5.5×4	Motor (kW x P)
○	○	○	○	○	○	○	○	○	○	○	○	○	○	○	○	○	7.5×4	
○	○	○	○	○	○	○	○	○	○	○	○	○	○	○	○	○	11×4	
○	○	○	○	○	○	○	○	○	○	○	○	○	○	○	○	○	15×4	
○	○	○	○	○	○	○	○	○	○	○	○	○	○	○	○	○	18.5×4	
○	○	○	○	○	○	○	○	○	○	○	○	○	○	○	○	○	22×4	
○	○	○	○	○	○	○	○	○	○	○	○	○	○	○	○	○	30×4	
○	○	○	○	○	○	○	○	○	○	○	○	○	○				37×4	
○	○	○	○	○	○	○	○	○	○	○	○	○					45×4	
○	○	○	○	○	○	○	○	○	○	○							55×4	

80	90
23	20
19	17
○	○
○	○
○	○
○	○
○	○
○	○
○	○
○	○
○	○
○	○
○	○
○	○
○	○

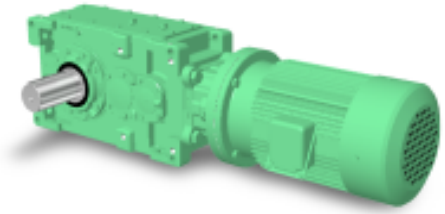

Drive Unit : Right Angle

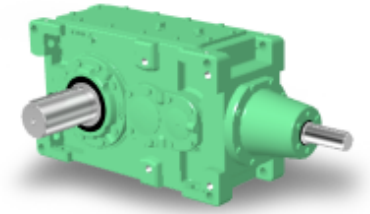

Reducer : Right Angle

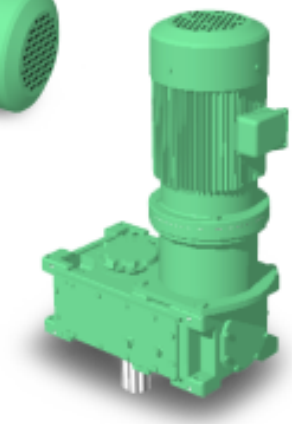

Drive Unit : Parallel

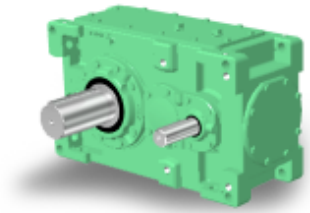

Reducer : Parallel

80	90	100	112	125	140	160	180	200	224	250	280	315	355	400	450	500	Ratio	
																	9015	SIZE
																	9025	
○	○	○	○	○	○	○	○	○	○								9030	
○	○	○	○	○	○	○	○	○	○	○	○						9035	
○	○	○	○	○	○	○	○	○	○								9040	
○	○	○	○	○	○	○	○	○	○	○	○	○	○	○			9050	
○	○	○	○	○	○	○	○	○	○	○	○	○	○	○	○	○	9055	
○	○	○	○	○	○	○	○	○	○	○	○	○	○	○			9060	
○	○	○	○	○	○	○	○	○	○	○	○	○	○	○			9070	
○	○	○	○	○	○	○	○	○	○	○	○	○	○	○	○	○	9075	
○	○	○	○	○	○	○	○	○	○	○	○	○	○	○			9080	
○	○	○	○	○	○	○	○	○	○	○	○	○	○	○	○	○	9085	
○	○	○	○	○	○	○	○	○	○	○	○	○	○	○			9090	
○	○	○	○	○	○	○	○	○	○	○	○	○	○	○	○		9095	
○	○	○	○	○	○	○	○	○	○	○	○	○	○	○			9100	
○	○	○	○	○	○	○	○	○	○	○	○	○	○	○	○		9105	
○	○	○	○	○	○	○	○	○	○	○	○	○	○	○			9110	
○	○	○	○	○	○	○	○	○	○	○	○	○	○	○	○		9115	
○	○	○	○	○	○	○	○	○	○	○	○	○	○	○	○		9118	
○	○	○	○	○	○	○	○	○	○	○	○	○	○	○			9121	
○	○	○	○	○	○	○	○	○	○	○	○	○	○	○			9126	
○	○	○	○	○	○	○	○	○	○	○	○	○	○	○			9128	
○	○	○	○	○	○	○	○	○	○	○	○	○					9131	
○	○	○	○	○	○	○	○	○	○	○	○	○					9136	

AVAILABLE COMBINATION

Basic Motor

Table 1. 3-Phase Induction Motors (4 Pole).

◎ : Standard Insulation
○ : Manufacutured Models

Capacity kW	Specifications							
	Indoor Type	Outdoor Type	Corrosion-proof Class2	Inslation Class			Inverter Motors (Constant Torque)	
				B	F	H	Indoor Type	Outdoor Type
5.5	○	○	○	◎	○	○	○	○
7.5	○	○	○	◎	○	○	○	○
11	○	○	○	◎	○	○	○	○
15	○	○	○	◎	○	○	○	○
18.5	○	○	○	◎	○	○	○	○
22	○	○	○	◎	○	○	○	○
30	○	○	○		◎	○	○	○
37	○	○	○		◎	○	○	○
45	○	○	○		◎	○	○	○
55	○	○	○		◎	○	○	○
Remarks	Continuous Rating, 55kW and under, Applicable Voltage : 200V 50/60Hz(400V 50/60Hz,440V 60Hz,440V 60Hz) Provided that the base frequency for driving an inverter is 60 Hz.							

Table 2. 3-Phase Induction Motors with Built-in Brakes (4 Pole).

◎ : Standard Insulation
○ : Manufacutured Models

Capacity kW	Specifications							
	Indoor Type	Outdoor Type	Corrosion-proof Class2	Inslation Class			Inverter Motors (Constant Torque)	
				B	F	H	Indoor Type	Outdoor Type
5.5	○	○	○	◎	○	○	○	○
7.5	○	○	○	◎	○	○	○	○
11	○	○	○	◎	○	○	○	○
15	○	○	○	◎	○	○	○	○
18.5	○	○	○	◎	○	○	○	○
22	○	○	○	◎	○	○	○	○
30	○	○	○		◎	○	○	○
37	○	○	○		◎	○		
Remarks	Continuous Rating, Applicable Voltage : 200V 50/60Hz , 220V 50/60Hz (400V 50/60Hz , 440V 60Hz) Provided that the base frequency for driving an inverter is 60 Hz. Brake Insulation : B type							

Notes : 1. Motors with output kW specifications other than as listed in Tables 1-4 are also manufactured. Consult factory.
Examples : Special voltage, dust-proof, humidy-proof, tropical treatment, high temperature, ship use,
dual shaft (round & square shaft), CSA standard, NEMA standard, etc.
2. When using an inverter drive, advice us of ambient temperature, input r/min,mounting method,
load characteristics and other conditions of use.

Table 3. Safety Increased Explosion-proof (eG3) 3-Phase Induction Motor (4 Pole).

◎: Standard Insulation
○: Manufacutured Models

Capacity kW	Specifications				
	Indoor Type	Outdoor Type	Corrosion-proof Class2	Inslation Class	
				B	F
5.5	○	○	○	◎	○
7.5	○	○	○	◎	○
11	○	○	○	◎	○
15	○	○	○	◎	
18.5	○	○	○	◎	
22	○	○	○	◎	
30	○	○	○	◎	○
37	○	○	○		◎
45	○	○	○		◎
55	○	○	○		◎
Remarks	Continuous Rating Applicable Voltage : 200V , 220V , 350V , 380V , 400V , 440V 50/60Hz				

Table 4. Pressure-tight Explosion-proof (d2G4) 3-Phase Motor (4 Pole).

◎ : Standard Insulation
○ : Manufacutured Models

Capacity kW	Specifications				
	Indoor Type	Outdoor Type	Corrosion-proof Class2	Inslation Class	Inverter Motors (Constant Torque)
				B	Indoor Type
5.5	○	○	○	◎	○
7.5	○	○	○	◎	○
11	○	○	○	◎	○
15	○	○	○	◎	○
18.5	○	○	○	◎	○
22	○	○	○	◎	○
30	○	○	○	◎	○
37	○	○	○		○
Remarks	Continuous Rating Applicable Voltage : 200V , 220V , 350V , 380V , 400V , 440V 50/60Hz (Inverter Motors) : 200V 60Hz , 220V 60Hz , 400V 60Hz , 440V 60Hz Applicable Inverter :Applicable only to Sumitomo Inverters.(Refer to Inverter catalogue.)				

INTRODUCTION OF APPLICATION

With Motor

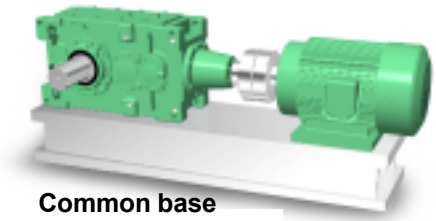

Common base

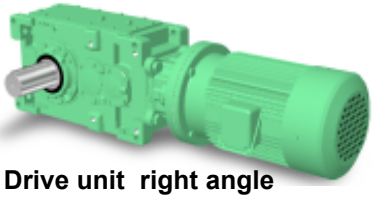

Drive unit right angle

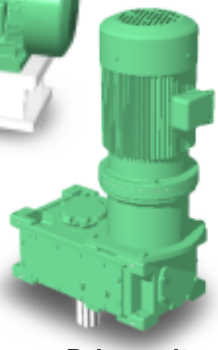

Drive unit parallel

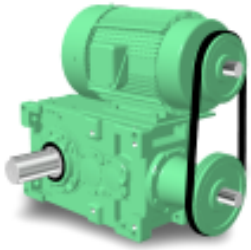

Top mount

Double Stack

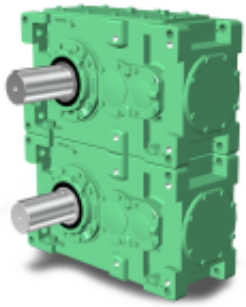

Single stage

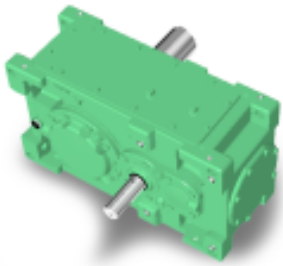

Reducer

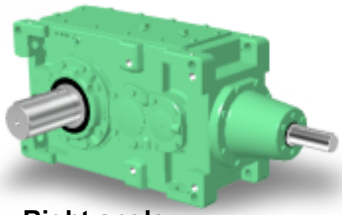

Right angle

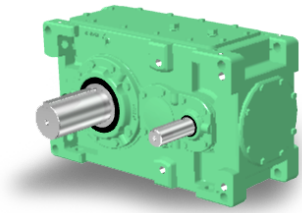

Parallel

Steel housing

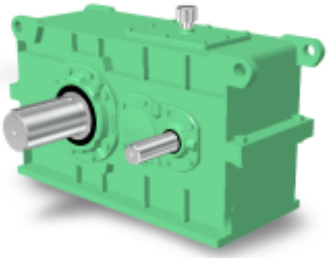

Mounting

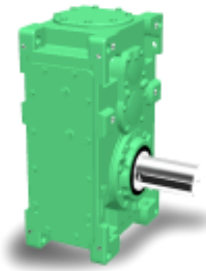

Upright mount

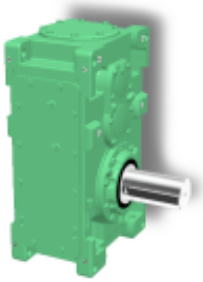

Upright wall mount

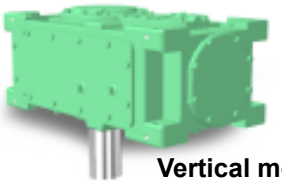

Vertical mount

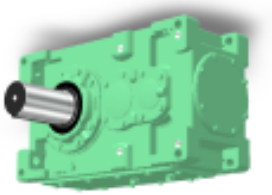

Ceiling mount

Specialslowspeedshaft

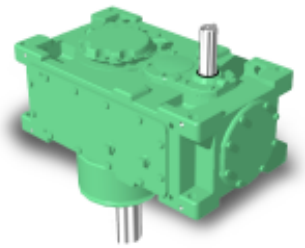

Drop bearing housing

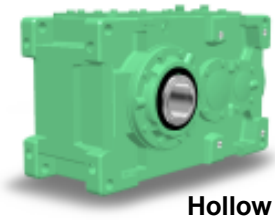

Hollow shaft

INDEX

A

Features
Available Combination
Drive Units and Reducers
Basic Motor
Introduction of Application

B Drive Unit

Standard Specifications ... B- 2
Construction Drawing ... B- 3
Nomenclature ... B- 4
Selection ... B- 6
Service Factor SF ... B- 8
Selection Tables and Dimension Tables
Right Angle Shaft ... B- 11
Parallel Shaft ... B- 73

C Reducer

Standard Specifications ... C- 2
Construction Drawing ... C- 3
Nomenclature ... C- 4
Selection ... C- 6
Service Factor SF ... C- 8
Selection Tables and Dimension Tables
Right Angle Shaft ... C- 11
Parallel Shaft ... C-105

D Technical Data

Lubricant and Installation ... D- 2
Painting Specifications and Rust Proof Standard ... D- 3
Moment of Inertia ... D- 4
Supplementary Dimension Drawing ... D- 12
Supplementary Matters to Hollow Shaft ... D- 17
Hollow Shaft Related Dimensions ... D- 18
Cooling Fan Dimension ... D- 20
Option Dimension ... D- 24
Motor Terminal Box ... D- 32
Motor Flange Dimension ... D- 34

memo

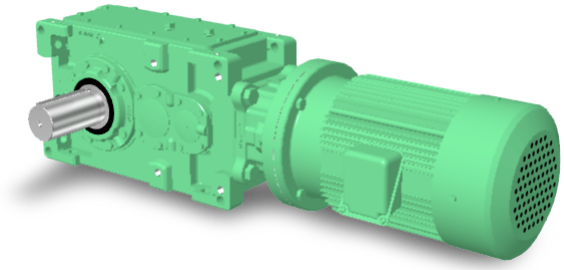

〈 Drive Unit Right Angle Shaft 〉

B

Drive Unit

Standard Specifications	B- 2
Construction Drawing	B- 3
Nomenclature	B- 4
Selection	B- 6
Service Factor SF	B- 8
Right Angle Shaft	B- 11
Parallel Shaft	B- 73
Exact Reduction Ratio	B- 110

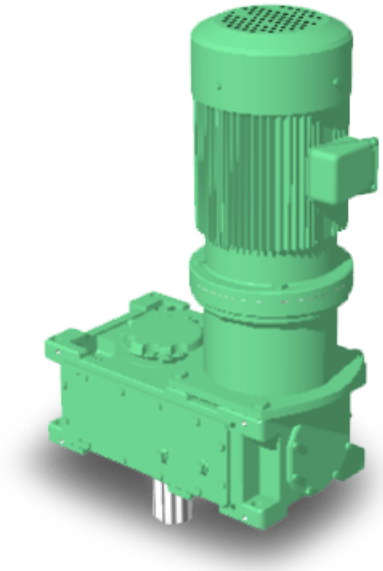

< Drive Unit Parallel Shaft >

Standard Specifications

Item		Standard Specification		Standard Specification with Built-in Brake	
Motor	Capacity Range	5.5kWX4P～55kWX4P		5.5kWX4P～11kWX4P･FB Brake（Non Asbestos） 15kWX4P CMB Brake 18.5kWX4P～37kWX4P ESB Brake	
	Enclosure	Totally enclosed fan cooled type		Totally enclosed fan cooled type	
	Power Source	55kW and smaller 200V 50/60Hz、 220V 60Hz		55kW and smaller 200V 50/60Hz、 220V 60Hz	
	Insulation	Insulation \ P	4P	Insulation \ P	4P
		Class B	5.5～22kW	Class B	5.5～15kW
		Class F	30～55kW		
	Time Rating	Continuous rating		Continuous rating	
	Lead wiring (Lug type)	Leadwiring \ P	4P	Leadwiring \ P	4P
		3	5.5～7.5kW（Direct starting）	5	5.5～7.5kW（Direct starting）
		6	Note1: 11～55kW（人-Δ starting available）	8	Note1: 11～37kW（人-Δ starting available）
	Standards	According to JIS			

Note1： 人-Δ stard is also available. Please consult us.

Item		Standard Specification		
		Mounting	High Speed Shaft Speed	
Reducer	Lubrication Method	Horizontal Shaft	750～1800r/min	Oil bath lubricaiton In case of high speed shaft speed is less than 750r/min, electric pump lubrication may be used. Consult SUMITOMO for details.
		Vertical Shaft	400～1800r/min	Pump lubrication (Two different pump lubrication systems are available; shaft connected pump lubrication and electric pump lubrication. For details, refer to the outside dimension drawing.)
		Upright Shaft	750～1800r/min	Oil bath lubricaiton Grease lubrication for right angle input shaft.
	Lubricant	Refer to the page D-2		
	Gear Type	Involute external gear		
Ambient Conditions	Installation location	Indoor (Minimal dust and humidity)		
	Ambient temperature	－10℃～40℃ A cooling fan may provided depending on the usage (Note 1)		
	Ambient humidity	under 85%		
	Elevation	under 1,000 meters		
	Atmosphere	Well ventilated location, free of corrosive gases, explosive gases, vapors and dust.		
Installation		Horizonal installation Refer to the page D-2		
Method of coupling with driven machine		Coupling, gears, chain sprocket or belt.		
Painting		Surface preparation : Shot blasting after washing before machining Inside painting : UNI GROUND PTC primer is sprayed once Outside painting : For prime-coating, UNI GROUND PTC primer is sprayed once. For final coating, NEO ALKYS is sprayed once. Painting color : MANSEL 5G 6/4.5. Refer to the page D-3.		

Note 1:In general, a heating or cooling system is necessary in case the ambient temperature is lower than -10℃ or higher than +50℃.

Construction Drawing

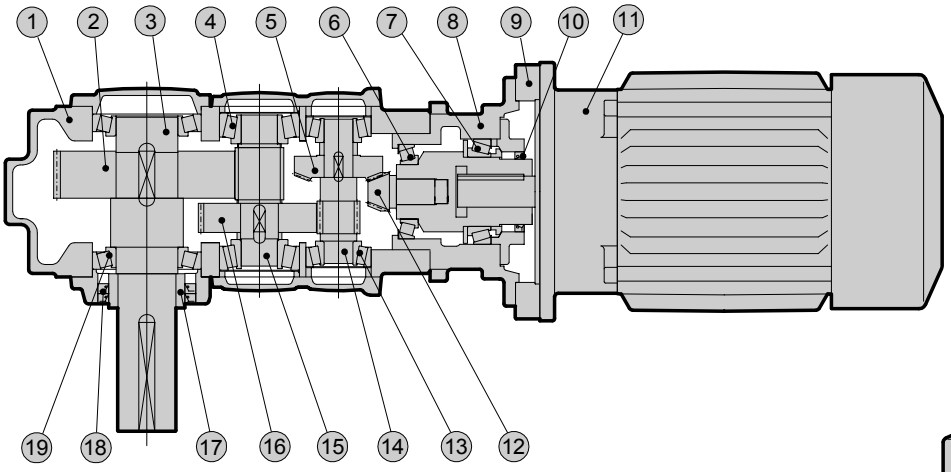

Drive Unit Right Angle Shaft Triple Reduction

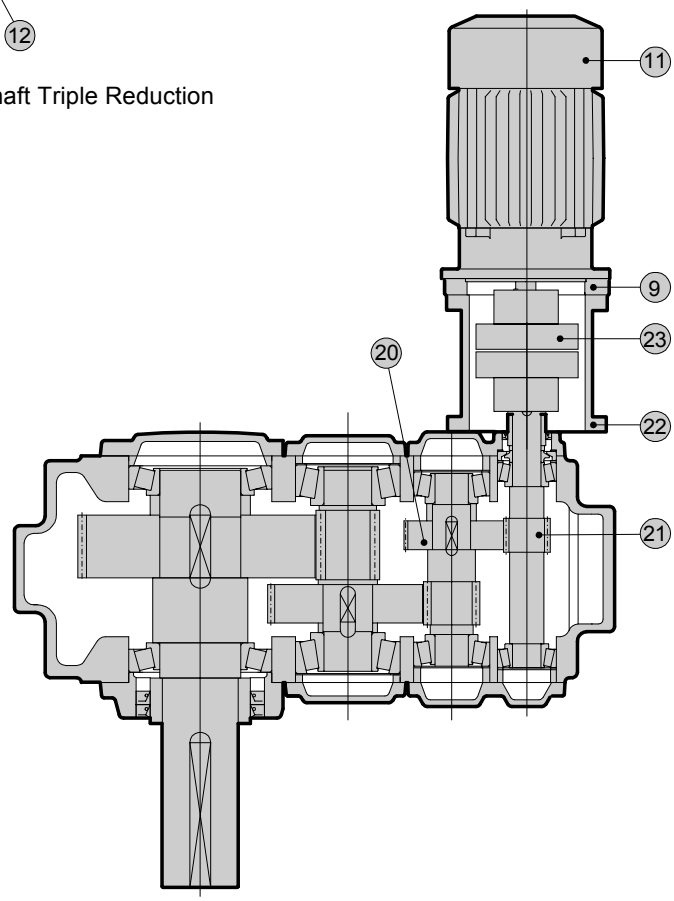

Drive Unit Parallel Shaft Triple Reduction

Ref. No.	Part Name	Ref. No.	Part Name	Ref. No.	Part Name	Ref. No.	Part Name
1	Housing	7	Taper roller bearing	13	Taper roller bearing	19	Taper roller bearing
2	Helical gear	8	Bearing housing	14	Helical pinion shaft	20	Helical gear
3	Slow speed shaft	9	Flange for motor	15	Helical pinion shaft	21	Helical pinion shaft
4	Taper roller bearing	10	Oil seal	16	Helical gear	22	Motor adapter
5	Bevel gear	11	Motor	17	Collar	23	Coupling
6	Taper roller bearing	12	Bevel pinion shaft	18	Oil seal		

Nomenclature

P	H	A	9055	R	3

Series	Mounting	Housing	Size	Torque kNm	Shaft Position	Number of Gear Stages
P Paramax	H 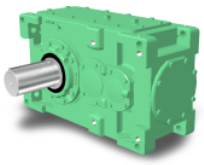 Horizontal	A Monoblock	9015	2.6	R 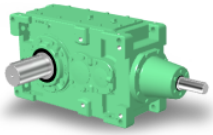 Right Angle	2 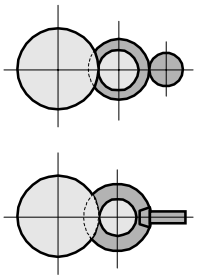 Double Reduction
			9025	4.2		
			9030	6.4		
			9035	8.5		
	V 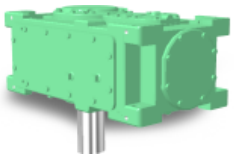 Vertical		9040	10.1		3 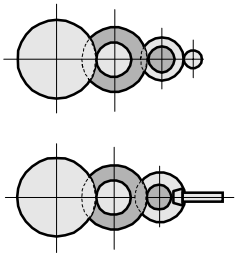 Triple Reduction
			9050	15.3		
			9055	19.9	P 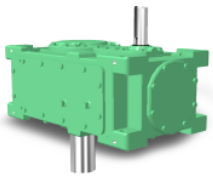 Parallel	
		D Split	9060	24.4		
	W 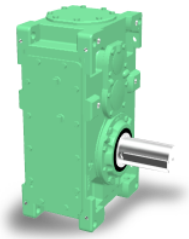 Upright		9070	38.2		4 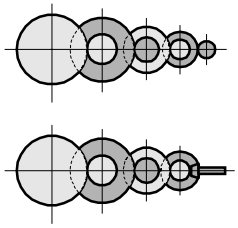 Quadruple Reduction
			9075	47.8		
			9080	58.5		
			9085	73.1		

1. For shaft arrangement, refer to the dimension sheets.
2.Consult us for redction ratios smaller then 6.3.

[ ] — [R] [M] [L] [K] — [35.5]

Mounting for Upright	Shaft Arrangement	High Speed Shaft	Slow Speed Shat	Nominal Ratio
(Blank) 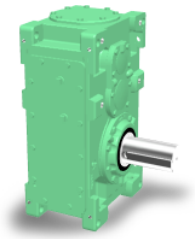	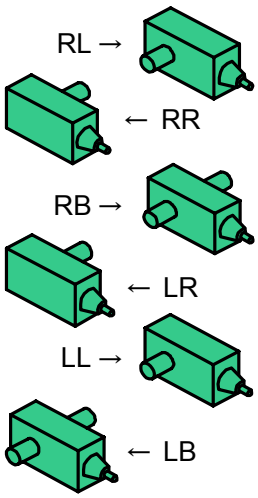	**M** 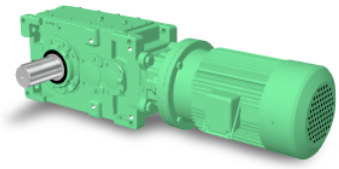 Right Angle Shaft 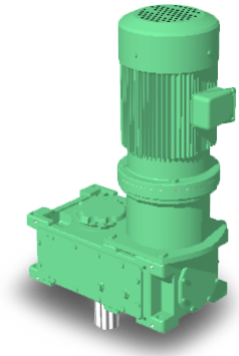 Parallel Shat	**(Blank)** 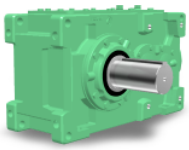 Solid Shaft	Right Angle Shaft 6.3, 7.1, 8, 9, 10, 11.2, 12.5, 14, 16, 18, 20, 22.4, 25, 28, 31.5, 35.5, 40, 45, 50 56, 63, 71, 80, 90, 100, 112, 125, 140, 160, 180, 200, 224, 250, 280, 315, 355, 400, 450
W 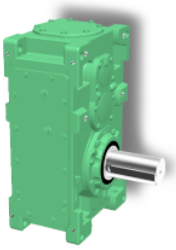 Wall Mount (Upright Mounting)	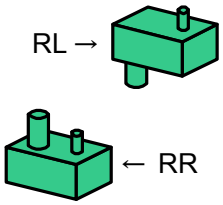	**Y** 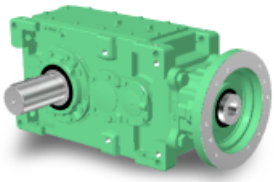 Flange for motor (Right Angle Shaft)	**T** 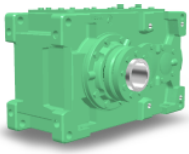 Hollow Shaft (Shrink Disk Type)	Parallel Shaft 6.3, 7.1, 8, 9, 10, 11.2, 12.5, 14, 16, 18, 20, 22.4, 25, 28, 31.5, 35.5, 40, 45, 50 56, 63, 71, 80, 90, 100, 112, 125, 140, 160, 180, 200, 224, 250, 280, 315, 355, 400, 450, 500
		J 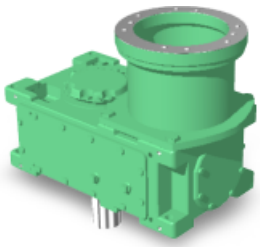 Motor Adapter (Parallel Shaft)	**K** 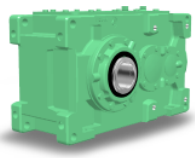 Hollow Shaft (Key Type)	

Selection

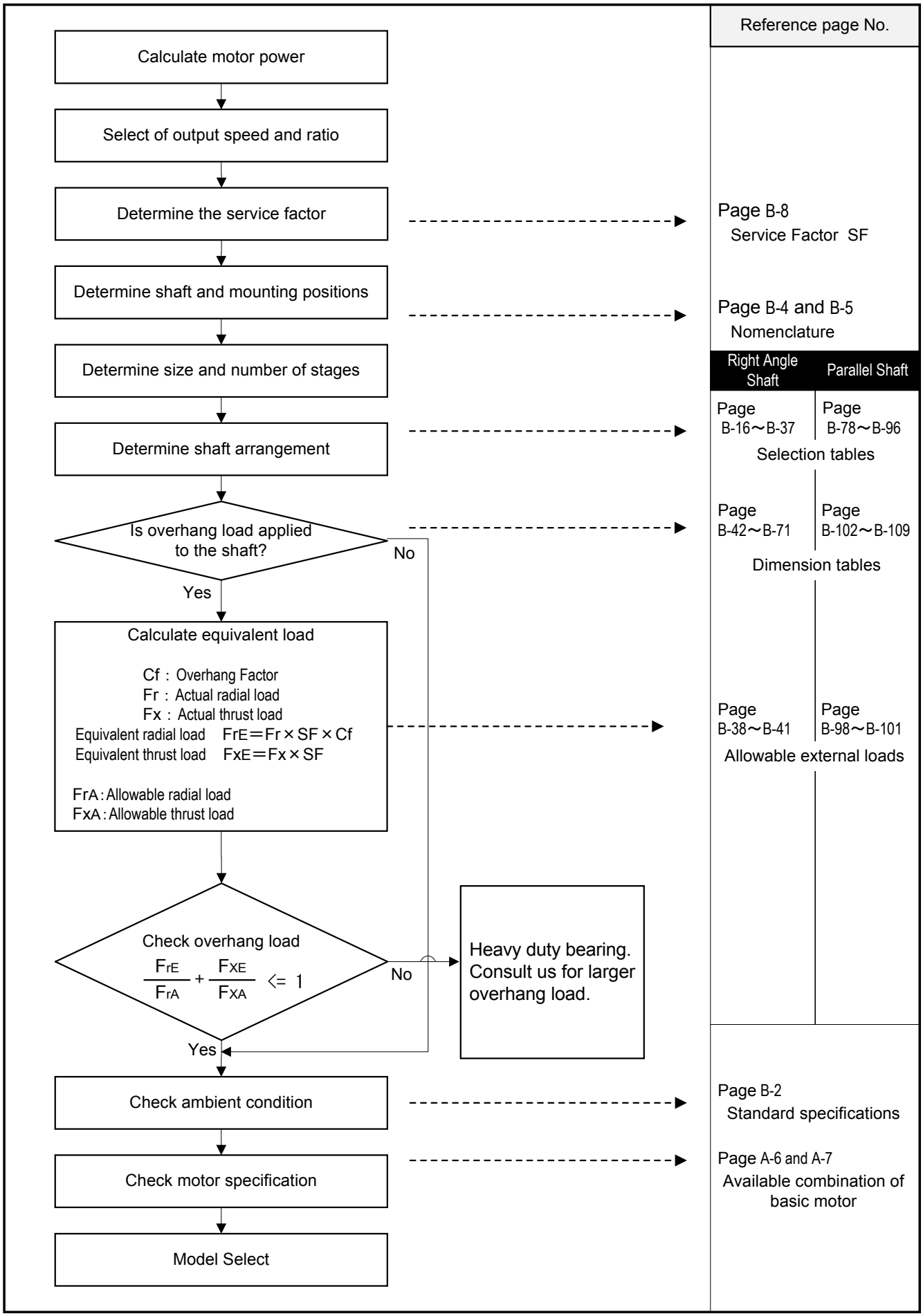
Reference page No.
Calculate motor power
Select of output speed and ratio
Determine the service factor
Page B-8
Service Factor SF
Determine shaft and mounting positions
Page B-4 and B-5
Nomenclature
Determine size and number of stages
Right Angle Shaft
Parallel Shaft
Determine shaft arrangement
Page B-16～B-37
Page B-78～B-96
Selection tables
Is overhang load applied to the shaft?
No
Yes
Page B-42～B-71
Page B-102～B-109
Dimension tables
Calculate equivalent load
Cf : Overhang Factor
Fr : Actual radial load
Fx : Actual thrust load
Equivalent radial load FrE＝Fr × SF × Cf
Equivalent thrust load FxE＝Fx × SF
FrA : Allowable radial load
FxA : Allowable thrust load
Page B-38～B-41
Page B-98～B-101
Allowable external loads
Check overhang load
FrE/FrA + FxE/FxA <= 1
No
Heavy duty bearing. Consult us for larger overhang load.
Yes
Check ambient condition
Page B-2
Standard specifications
Check motor specification
Page A-6 and A-7
Available combination of basic motor
Model Select

Selection Example

○ : Conditions ■ : Selected item		Refernce page No.	
○ Load power P	: P = 17kW		
■ Motor power	→ 18.5 kW		
○ Electrical source	: 200V 50Hz		
○ Output speed	: 33 r/min		
Load condition			
○ Type of load, Operating hours	: Uniform Load・14hours/day	B-8	Service Factor
■ Determine service factor	→ 1.25		
○ Shaft and mounting positions	: Right Angle Shaft・Horizontal Mounting	B-4～B-5	Nomenclature
■ Determine size, shaft position, number of stages	→ 9030 R3 45 Size 9030 Right Angle Shaft Triple Reduction Nominal Redcution Ratio 45	B-24	Selection Tables
■ Check dimension		B-44	Dimension Tables
■ Check shaft arrangement	→ RML		
■ Check nomenclature	→ PHA9030R3-RML-45		
Check Overhang load			
○ Overhang member	: Sprocket (Single row)		
■ Overhang factor Cf	→ Cf = 1.0	B-38	Allowable external load
○ Radial load position and direction	: Center of solid shaft, Downward		
○ Radial load Fr	: 8.5 kN		
○ Thrust load Fx	: 1.2 kN		
■ Equivalent radial load FrE	→ FrE = 8.5 × 1.25 × 1.0 = 10.6		
■ Equivalent axial load FrX	→ FrX = 8.5 × 1.25 = 10.6		
■ Allowable radial load	→ 35.3 kN	B-38	Allowable Radial Load
■ Allowable thrust load	→ 26.5 kN	B-38	Allowable Thrust Load
$\frac{10.6}{35.3} + \frac{10.6}{26.5} = 0.70 < 1$	→ OK		
○ Ambient Condition	: Indoor,Ambient temperature 20℃		
■ Check ambient condition	→ OK	B-2	Standard Specifications
○ Motor specification	: 200V 50Hz without brake・indoor		
■ Check motor specification	→ OK	A-6	Available Combination of Basic Motor
■ Model selected	→ PHA9035R3-RML-45 200V 50Hz without brake・indoor		

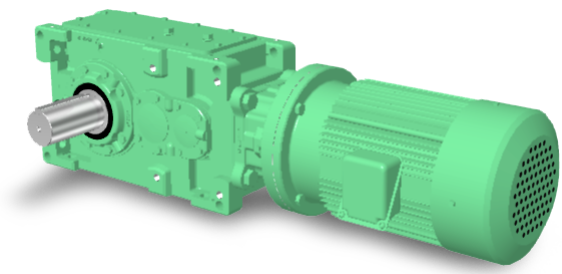

Service Factor SF

Driven Machine	Operating Hours (hours/day) 3hrs	10hrs	24hrs
CRANES			
CONVEYORS(General purpose)			
Uniformly load or fed	1.00	1.00	1.25
Heavy load			
Not uniformly fed	1.00	1.25	1.50
Reciprocating or shaker	1.50	1.75	2.00
ELEVATORS			
Elevators	1.50	1.50	1.50
Escalators	1.25	1.25	1.25
METAL MILLS			
Draw bench carriage and main drive	1.50	1.50	1.50
Runout table			
Non reversing			
Group drives	1.50	1.50	1.50
Individual drives	2.00	2.00	2.00
Reversing	2.00	2.00	2.00
Slab pushers	1.50	1.50	1.50
Shears	2.00	2.00	2.00
Wire drawing	1.25	1.25	1.25
Wire winding machine	1.25	1.50	1.50
METAL STRIP PROCESSING MACHINERY			
Bridles	1.50	1.50	1.50
Coilers & uncoilers	1.00	1.25	1.50
Edge trimmers	1.00	1.25	1.50
Flatteners	1.25	1.25	1.50
Loopers(Accumulators)	1.50	1.50	2.00
Pinch rolls	1.25	1.25	1.50
Scrap choppers	2.00	2.00	2.00
Shears	2.00	2.00	2.00
slitters	1.00	1.25	1.50
MILL, ROTARY TYPE			
Balland rod	2.00	2.00	2.00
Cement Kilns	2.00	2.00	2.00
Kilns(Except cement klins)	1.50	1.50	1.50
Dryers and coolers	1.50	1.50	1.50
SEWAGE DISPOSAL EQUIPMENT			
Aerators	2.00	2.00	2.00
Bar screens	1.25	1.25	1.25
Chemical feeders	1.25	1.25	1.25
Dewatering screens	1.50	1.50	1.50
Scum breakers	1.50	1.50	1.50
Slow or rapid mixers	1.50	1.50	1.50
Sludge collectors	1.25	1.25	1.25
Thickeners	1.50	1.50	1.50
Vacuum filters	1.50	1.50	1.50
EXTRUDERS			
Plastics	1.25	1.25	1.25
Rubber	1.50	1.50	1.50
FEEDERS			
Apron	1.00	1.25	1.50
Belt	1.00	1.25	1.50
Disc	1.00	1.00	1.25
Reciprocating	1.50	1.75	2.00
Screw	1.00	1.25	1.50

Classification of crane	Hoisting	Traverse Motion	Travel Motion	Slewing Motion	Boom Hoisting
Group Ⅰ	1.00	1.50		1.25	1.00
Group Ⅱ	1.25	1.50			1.00
Group Ⅲ	1.50	1.75			1.25
Group Ⅳ	1.75	2.00			1.50

The crane classifi-caiton is based on JIS B8821-1976 "Calculation standard for the structure of crane."

Driven Machine	Operating Hours (hours/day) 3hrs	10hrs	24hrs
RUBBER INDUSTRY			
Mixers	1.75	1.75	2.00
Mixing mill -2 smooth rolls	1.50	1.50	1.75
Batch drop mill -2 smooth rolls	1.50	1.50	1.50
Cracker warmer			
-2 roll:1corrugated roll	1.75	1.75	1.75
Cracker -2 corrugated rolls	2.00	2.00	2.00
Holding, feed and blend mill			
-2rolls	1.25	1.25	1.25
Refiner -2rolls	1.50	1.50	1.50
Calenders	1.50	1.50	1.50
PAPER MILL			
All types incl. Paper making machine	2.00	2.00	2.00
AGITATORS AND MIXERS			
Pure liquids	1.00	1.00	1.25
Liquids and solids	1.00	1.25	1.50
Liquids variable density	1.00	1.25	1.50
MIXERS			
Concrete	1.25	1.25	1.50
CRUSHER			
Stone or ore	2.50	2.50	2.50
BLOWERS			
Centrifugal	1.00	1.00	1.25
Lobe	1.00	1.25	1.50
Vane	1.00	1.25	1.50
COMPRESSORS			
Centrifugal	1.00	1.00	1.25
Lobe	1.00	1.25	1.50
Reciprocating:multi cylinder	1.50	1.50	1.75
Reciprocating:single cylinder	1.75	1.75	2.00
FANS			
Centrifugal	1.00	1.00	1.25
Cooling towers	※	※	※
Forced draft	1.25	1.25	1.25
Suction draft	1.50	1.50	1.50
Industrial and mine	1.50	1.50	1.50
PUMPS			
Centrifugal	1.00	1.00	1.25
Screw pump	1.25	1.25	1.50
Gear pump	1.25	1.25	1.50
DREDGES			
Cable reels	1.25	1.25	1.50
Conveyors	1.25	1.25	1.50
Cutter head drive	2.00	2.00	2.00
Pumps	2.00	2.00	2.00
Screen drives	1.75	1.75	2.00
Stackers	1.25	1.25	1.50
Winches	1.25	1.25	1.50
GENERATORS AND EXCITERS	1.00	1.00	1.25
HAMMER MILLS	1.75	1.75	2.00
SUGAR INDUSTRY			
Beet slicer	2.00	2.00	2.00
Cane knives	1.50	1.50	1.50
Crushers	1.50	1.50	1.50
Mills(Slow speed end)	1.75	1.75	1.75

Notes:
(1) Values in the above table are based on AGMA standards and SUMITOMO's experience.
(2) Values in the above table apply for electric motors as prime movers - if prime mover is a multi cylinder combustion engine, 0.25 has to be added to the SF.
(3) Consult us for special duty or when special safety specifications are needed.
(4) ※:For SF, consult us.

Refer to the following for driven machines not shown on the left page.

Prime Mover	Operating Hours	Type of Load		
		Uniform Load	Moderate Shock Load	Heavy Shock Load
		U	M	H
Electric Motor	3hours/day	1.00	1.00	1.50
	10hours/day	1.00	1.25	1.75
	24hours/day	1.25	1.50	2.00
Internal Combustion Engine (multi cyclinder)	3hours/day	1.00	1.25	1.75
	10hours/day	1.25	1.50	2.00
	24hours/day	1.50	1.75	2.25

Notes : Consult us when the operating hours are less than 3 hours/day or when an internal combustion engine (single cylinder) is used.

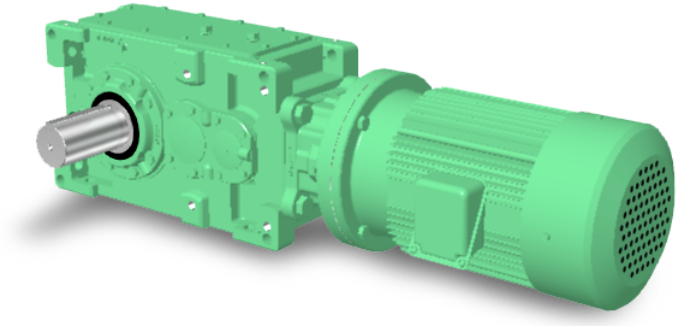

< Drive Unit Right Angle Shaft Horizontal Mounting >

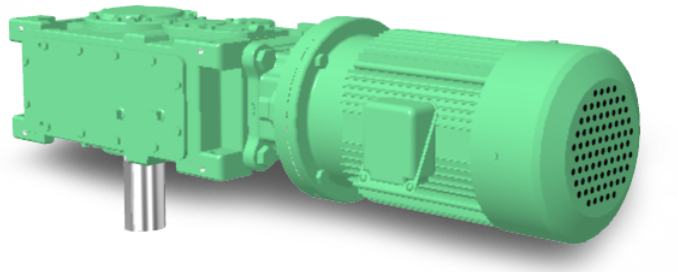

< Drive Unit Right Angle Shaft Vertical Mounting >

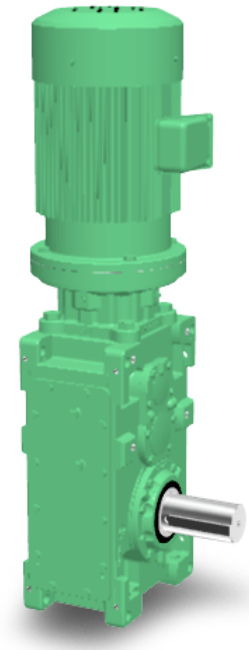

< Drive Unit Right Angle Shaft Upright Mounting >

B

Drive Unit Right Angle Shaft

Selection	B- 12
Allowable Radial and Thrust Loads	B- 38
Dimension Sheets	B- 42
Exact Actual Ratio	B- 110

Combinations with 4P motor

Shaft Position	High Speed Shaft Speed	Ambient Temperature
Right Angle Shaft	1500r/min	40 Degree

kW	SF	Low Speed Shaft Speed (r/min)																		
		238	211	188	167	150	134	120	107	94	83	75	67	60	54	48	42	38	33	30
		Nominal Reduction Ratio																		
		6.3	7.1	8	9	10	11.2	12.5	14	16	18	20	22.4	25	28	31.5	35.5	40	45	50
5.5kW 4P	1															9030	9030	9030	9030	9030
	1.25															9030	9030	9030	9030	9030
	1.5															9030	9030	9030	9030	9030
	2															9030	9030	9030	9030	9030
7.5kW 4P	1														9030	9030	9030	9030	9030	9030
	1.25														9030	9030	9030	9030	9030	9030
	1.5														9030	9030	9030	9030	9030	9030
	2														9030	9030	9030	9030	9030	9030
11kW 4P	1									9030	9030	9030	9030	9030	9030	9030	9030	9030	9030	9030
	1.25									9030	9030	9030	9030	9030	9030	9030	9030	9030	9030	9030
	1.5									9030	9030	9030	9030	9030	9030	9030	9030	9030	9030	9035
	2									9030	9030	9030	9030	9030	9030	9030	9030	9030	9030	9035
15kW 4P	1							9030	9030	9030	9030	9030	9030	9030	9030	9030	9030	9030	9030	9030
	1.25							9030	9030	9030	9030	9030	9030	9030	9030	9030	9030	9030	9030	9035
	1.5							9030	9030	9030	9030	9030	9030	9030	9030	9030	9030	9030	9030	9035
	2							9030	9030	9030	9030	9030	9030	9030	9030	9035	9035	9040	9040	9050
18.5kW 4P	1					9030	9030	9030	9030	9030	9030	9030	9030	9030	9030	9030	9030	9030	9030	9035
	1.25					9030	9030	9030	9030	9030	9030	9030	9030	9030	9030	9030	9030	9030	9030	9035
	1.5					9030	9030	9030	9030	9030	9030	9030	9030	9030	9030	9035	9035	9040	9040	9050
	2					9030	9030	9030	9030	9030	9030	9030	9030	9030	9030	9035	9035	9040	9050	9050
22kW 4P	1	9030	9030	9030	9030	9030	9030	9030	9030	9030	9030	9030	9030	9030	9030	9030	9030	9030	9030	9035
	1.25	9030	9030	9030	9030	9030	9030	9030	9030	9030	9030	9030	9030	9030	9030	9035	9035	9040	9040	9050
	1.5	9030	9030	9030	9030	9030	9030	9030	9030	9030	9030	9030	9030	9030	9030	9035	9035	9040	9040	9050
	2	9030	9030	9030	9030	9030	9030	9030	9030	9035	9035	9030	9030	9035	9035	9040	9050	9050	9050	9050
30kW 4P	1	9030	9030	9030	9030	9030	9030	9030	9030	9030	9030	9030	9030	9035	9035	9035	9035	9040	9040	9050
	1.25	9030	9030	9030	9030	9030	9030	9030	9030	9030	9030	9030	9030	9035	9035	9035	9035	9040	9050	9050
	1.5	9030	9030	9030	9030	9030	9030	9030	9030	9035	9035	9030	9030	9035	9035	9040	9050	9050	9050	9050
	2	9030	9030	9030	9030	9030	9030	9030	9030	9035	9035	9040	9040	9040	9050	9050	9050	9050	9055	9055
37kW 4P	1	9030	9030	9030	9030	9030	9030	9030	9030	9035	9035	9035	9035	9035	9040	9040	9040	9040	9050	9050
	1.25	9030	9030	9030	9030	9030	9030	9030	9030	9035	9035	9040	9040	9035	9040	9040	9050	9050	9050	9050
	1.5	9030	9030	9030	9030	9030	9030	9030	9030	9035	9035	9040	9040	9040	9050	9050	9050	9050	9055	9055
	2	9030	9030	9030	9030	9030	9030	9035	9035			9050	9050	9050	9050	9050	9055	9055	9060	9060
45kW 4P	1	9030	9040	9035	9035	9035	9035	9035	9035	9035	9035	9040	9040	9040	9040	9050	9050	9050	9050	9050
	1.25	9030	9040	9035	9035	9035	9035	9035	9035	9035	9035	9040	9040	9040	9050	9050	9050	9050	9055	9055
	1.5	9030	9040	9035	9035	9035	9035	9035	9035			9040	9040	9050	9050	9050	9055	9055	9055	9060
	2	9030	9040	9035	9035	9035	9035					9050	9050	9050	9055	9055	9060	9060	9070	9070
55kW 4P	1	9040	9040	9035	9040	9040	9040	9040	9040	9040		9050	9050	9055	9055	9055	9055	9055	9055	9055
	1.25	9040	9040	9035	9040	9040	9040	9040	9040			9050	9050	9055	9055	9055	9055	9055	9060	9060
	1.5	9040	9040	9035	9040	9040	9040					9050	9050	9055	9055	9055	9055	9060	9070	9070
	2	9040	9040	9040	9040	9040	9040					9070	9070	9070	9070	9070	9070	9070	9070	9075

Size of Reducer

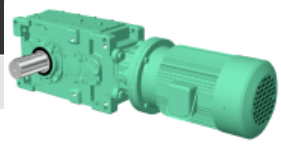

Combinations with 4P motor (1500r/min)

Low Speed Shaft Speed (r/min)																			SF	kW
27	24	21	19	17	15	13	12	11	9.4	8.3	7.5	6.7	6.0	5.4	4.8	4.2	3.8	3.3		
Nominal Reduction Ratio																				
56	63	71	80	90	100	112	125	140	160	180	200	224	250	280	315	355	400	450		
9030	9030	9030	9035	9035	9040	9040	9040	9040	9050	9050	9050	9050	9050	9050	9050	9050	9055	9055	1	
9030	9030	9030	9035	9035	9040	9040	9040	9040	9050	9050	9050	9050	9050	9050	9050	9055	9055	9055	1.25	5.5kW
9030	9030	9030	9035	9035	9040	9040	9040	9040	9050	9050	9050	9050	9050	9055	9055	9055	9075	9075	1.5	4P
9030	9030	9030	9035	9035	9040	9040	9040	9040	9050	9050	9050	9055	9055	9060	9060	9070	9075	9075	2	
9030	9030	9030	9035	9035	9040	9040	9040	9040	9050	9050	9050	9050	9050	9050	9050	9055	9055	9075	1	
9030	9030	9030	9035	9035	9040	9040	9040	9040	9050	9050	9050	9050	9050	9055	9055	9060	9075	9075	1.25	7.5kW
9030	9030	9030	9035	9035	9040	9040	9040	9050	9050	9050	9050	9055	9055	9060	9060	9070	9075	9075	1.5	4P
9030	9030	9035	9035	9035	9040	9050	9050	9050	9055	9055	9060	9060	9060	9070	9070	9070	9075	9075	2	
9030	9030	9030	9035	9035	9040	9040	9040	9040	9050	9050	9050	9055	9055	9060	9060	9070	9075	9075	1	
9030	9030	9030	9035	9035	9040	9040	9050	9050	9050	9055	9055	9055	9060	9070	9070	9070	9075	9075	1.25	11kW
9035	9040	9040	9040	9040	9040	9050	9050	9055	9055	9055	9060	9070	9070	9070	9070	9070	9075	9075	1.5	4P
9035	9040	9050	9050	9050	9050	9055	9055	9060	9070	9070	9070	9070	9070	9075	9075	9075	9085	9085	2	
9030	9030	9035	9035	9035	9040	9050	9050	9050	9055	9055	9060	9060	9060	9070	9070	9070	9075	9075	1	
9035	9040	9040	9040	9050	9050	9050	9050	9055	9055	9060	9060	9070	9070	9070	9075	9075	9075	9085	1.25	15kW
9035	9040	9050	9050	9050	9050	9055	9055	9060	9070	9070	9070	9070	9070	9075	9075	9075	9085	9085	1.5	4P
9050	9050	9050	9055	9055	9060	9060	9060	9070	9070	9070	9070	9075	9075	9080	9085	9085	9085		2	
9035	9040	9040	9040	9050	9050	9050	9050	9055	9055	9060	9060	9070	9070	9070	9070	9075	9075	9075	1	
9035	9040	9050	9050	9050	9050	9055	9055	9060	9070	9070	9070	9070	9070	9075	9075	9080	9085	9085	1.25	18.5kW
9050	9050	9050	9055	9055	9060	9060	9060	9070	9070	9070	9070	9070	9075	9075	9080	9085	9085		1.5	4P
9050	9050	9055	9055	9060	9060	9070	9070	9070	9075	9075	9080	9080	9080	9085	9085				2	
9035	9040	9050	9050	9050	9050	9055	9055	9060	9070	9070	9070	9070	9070	9075	9075	9075	9085	9085	1	
9050	9050	9050	9055	9055	9060	9060	9060	9070	9070	9070	9070	9070	9075	9075	9080	9085	9085		1.25	22kW
9050	9050	9055	9055	9055	9060	9070	9070	9070	9070	9070	9070	9075	9075	9085	9085	9085			1.5	4P
9055	9055	9060	9070	9070	9070	9070	9070	9075	9075	9075	9080	9085	9085	9085					2	
9050	9050	9050	9055	9055	9060	9060	9060	9070	9070	9070	9070	9075	9075	9080	9085	9085	9085		1	
9050	9050	9055	9055	9070	9070	9070	9070	9070	9075	9075	9080	9080	9080	9085	9085				1.25	30kW
9055	9055	9060	9070	9070	9070	9070	9070	9075	9075	9080	9080	9085	9085	9085					1.5	4P
9060	9060	9070	9070	9070	9070	9075	9075	9080	9085	9085									2	
9050	9050	9055	9055	9060	9060	9070	9070	9070	9075	9075	9080	9080	9080	9085	9085				1	
9055	9055	9060	9070	9070	9070	9070	9070	9075	9075	9080	9080	9085	9085						1.25	37kW
9060	9060	9070	9070	9070	9070	9075	9075	9075	9080	9085	9085								1.5	4P
9070	9070	9070	9075	9075	9080	9080	9080	9085	9085										2	
9055	9055	9060	9070	9070	9070	9070	9070	9075	9075	9080	9080	9085	9085	9085					1	
9060	9060	9070	9070	9070	9070	9075	9075	9075	9080	9085	9085								1.25	45kW
9070	9070	9070	9075	9075	9080	9080	9080	9085	9085	9085									1.5	4P
9070	9075	9075	9080	9080	9080	9085	9085												2	
9060	9060	9070	9070	9070	9070	9075	9075	9075	9080	9085	9085								1	
9070	9070	9070	9075	9075	9080	9080	9080	9085	9085										1.25	55kW
9070	9070	9070	9075	9075	9080	9080	9085	9085											1.5	4P
9075																			2	

Combinations with 4P motor

Shaft Position	High Speed Shaft Speed	Ambient Temperature
Right Angle Shaft	1800r/min	40 Degree

kW	SF	Low Speed Shaft Speed (r/min)																		
		286	254	225	200	180	161	144	129	113	100	90	80	72	64	57	51	45	40	36
		Nominal Redcution Ratio																		
		6.3	7.1	8	9	10	11.2	12.5	14	16	18	20	22.4	25	28	31.5	35.5	40	45	50
5.5kW 4P	1																			9030
	1.25																			9030
	1.5																			9030
	2																			9030
7.5kW 4P	1															9030	9030	9030	9030	9030
	1.25															9030	9030	9030	9030	9030
	1.5															9030	9030	9030	9030	9030
	2															9030	9030	9030	9030	9030
11kW 4P	1									9030	9030	9035	9030	9030	9030	9030	9030	9030	9030	9030
	1.25									9030	9030	9035	9030	9030	9030	9030	9030	9030	9030	9030
	1.5									9030	9030	9035	9030	9030	9030	9030	9030	9030	9030	9030
	2									9030	9030	9035	9035	9030	9030	9030	9030	9030	9030	9035
15kW 4P	1							9030	9030	9030	9030	9030	9030	9030	9030	9030	9030	9030	9030	9030
	1.25							9030	9030	9030	9030	9030	9030	9030	9030	9030	9030	9030	9030	9030
	1.5							9030	9030	9030	9030	9030	9030	9030	9030	9030	9030	9030	9030	9035
	2							9030	9030	9030	9030	9030	9030	9030	9030	9030	9030	9030	9035	9035
18.5kW 4P	1							9030	9030	9030	9030	9030	9030	9030	9030	9030	9030	9030	9030	9030
	1.25							9030	9030	9030	9030	9030	9030	9030	9030	9030	9030	9030	9030	9035
	1.5							9030	9030	9030	9030	9030	9030	9030	9030	9030	9030	9030	9030	9035
	2							9030	9030	9030	9030	9030	9030	9030	9030	9035	9035	9040	9040	9050
22kW 4P	1					9030	9030	9030	9030	9030	9030	9030	9030	9030	9030	9030	9030	9030	9030	9035
	1.25					9030	9030	9030	9030	9030	9030	9030	9030	9030	9030	9030	9030	9030	9030	9035
	1.5					9030	9030	9030	9030	9030	9030	9030	9030	9030	9030	9035	9035	9040	9040	9050
	2					9030	9030	9030	9030	9030	9030	9030	9030	9030	9030	9035	9035	9040	9050	9050
30kW 4P	1	9030	9030	9030	9030	9030	9030	9030	9030	9030	9030	9030	9035	9035	9035	9035	9035	9035	9035	9035
	1.25	9030	9030	9030	9030	9030	9030	9030	9030	9030	9030	9030	9035	9035	9035	9035	9035	9040	9040	9050
	1.5	9030	9030	9030	9030	9030	9030	9030	9030	9030	9030	9030	9035	9035	9035	9035	9035	9040	9050	9050
	2	9030	9030	9030	9030	9030	9030	9030	9030	9035	9035	9030	9040	9035	9040	9050	9050	9050	9050	9055
37kW 4P	1	9030	9030	9030	9030	9030	9030	9030	9030	9035	9035	9035	9035	9035	9040	9040	9040	9040	9040	9050
	1.25	9030	9030	9030	9030	9030	9030	9030	9030	9035	9035	9035	9035	9035	9040	9040	9040	9040	9050	9050
	1.5	9030	9030	9030	9030	9030	9030	9030	9030	9035	9035	9040	9040	9035	9040	9040	9050	9050	9050	9050
	2	9030	9030	9030	9030	9030	9030	9035	9035	9040	9040	9040	9040	9040	9050	9050	9050	9055	9055	9055
45kW 4P	1	9040	9040	9035	9035	9035	9035	9035	9035	9035	9035	9040	9040	9040	9040	9050	9050	9050	9050	9050
	1.25	9040	9040	9035	9035	9035	9035	9035	9035	9035	9035	9040	9040	9040	9040	9050	9050	9050	9050	9050
	1.5	9040	9040	9035	9035	9035	9035	9035	9035	9035	9035	9040	9040	9040	9050	9050	9050	9050	9055	9055
	2	9040	9040	9035	9035	9035	9035	9035	9035			9050	9050	9050	9050	9050	9055	9055	9060	9070
55kW 4P	1	9040	9040	9040	9040	9040	9040	9040	9040	9040		9050	9050	9055	9055	9055	9055	9055	9055	9055
	1.25	9040	9040	9040	9040	9040	9040	9040	9040	9040		9050	9050	9055	9055	9055	9055	9055	9055	9055
	1.5	9040	9040	9040	9040	9040	9040	9040	9040			9050	9050	9055	9055	9055	9055	9055	9060	9060
	2	9040	9040	9040	9040	9040	9040					9060	9060	9060	9060	9070	9070	9070	9070	9070

Size of Reducer

Combinations with 4P motor (1800r/min)

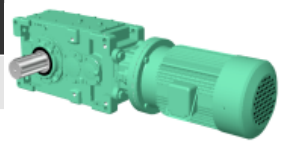

Low Speed Shaft Speed (r/min)																			SF	kW
32	29	25	23	20	18	16	14	13	11	10	9.0	8.0	7.2	6.4	5.7	5.1	4.5	4.0		
Nominal Reduction Ratio																				
56	63	71	80	90	100	112	125	140	160	180	200	224	250	280	315	355	400	450		
9030	9030	9030	9035	9035	9040	9040	9040	9040	9050	9050	9050	9050	9050	9050	9050	9050	9055	9055	1	5.5kW 4P
9030	9030	9030	9035	9035	9040	9040	9040	9040	9050	9050	9050	9050	9050	9050	9050	9050	9055	9055	1.25	
9030	9030	9030	9035	9035	9040	9040	9040	9040	9050	9050	9050	9050	9050	9050	9050	9055	9055	9055	1.5	
9030	9030	9030	9035	9035	9040	9040	9040	9040	9050	9050	9050	9050	9050	9055	9055	9060	9075	9075	2	
9030	9030	9030	9035	9035	9040	9040	9040	9040	9050	9050	9050	9050	9050	9050	9050	9050	9055	9055	1	7.5kW 4P
9030	9030	9030	9035	9035	9040	9040	9040	9040	9050	9050	9050	9050	9050	9050	9055	9055	9055	9075	1.25	
9030	9030	9030	9035	9035	9040	9040	9040	9040	9050	9050	9050	9050	9050	9055	9055	9060	9075	9075	1.5	
9030	9030	9030	9035	9035	9040	9040	9040	9050	9050	9050	9050	9055	9055	9060	9070	9070	9075	9075	2	
9030	9030	9030	9035	9035	9040	9040	9040	9040	9050	9050	9050	9050	9050	9055	9055	9060	9075	9075	1	11kW 4P
9030	9030	9030	9035	9035	9040	9040	9040	9050	9050	9050	9050	9055	9055	9060	9060	9070	9075	9075	1.25	
9030	9030	9030	9035	9035	9040	9040	9050	9050	9050	9055	9055	9055	9060	9070	9070	9070	9075	9075	1.5	
9035	9040	9040	9040	9050	9050	9050	9050	9055	9055	9060	9060	9070	9070	9070	9070	9075	9075	9075	2	
9030	9030	9030	9035	9035	9040	9040	9040	9050	9050	9050	9050	9055	9055	9060	9070	9070	9075	9075	1	15kW 4P
9030	9030	9035	9035	9035	9040	9050	9050	9050	9055	9055	9060	9060	9060	9070	9070	9070	9075	9075	1.25	
9035	9040	9040	9040	9050	9050	9050	9050	9055	9055	9060	9060	9070	9070	9070	9070	9075	9075	9085	1.5	
9040	9040	9050	9050	9050	9055	9055	9055	9060	9070	9070	9070	9070	9070	9075	9075	9080	9085	9085	2	
9030	9030	9035	9035	9035	9040	9050	9050	9050	9055	9055	9060	9060	9060	9070	9070	9070	9075	9075	1	18.5kW 4P
9035	9040	9040	9040	9050	9050	9050	9050	9055	9055	9060	9060	9070	9070	9070	9075	9075	9075	9085	1.25	
9035	9040	9050	9050	9050	9050	9055	9055	9060	9070	9070	9070	9070	9070	9075	9075	9080	9085	9085	1.5	
9050	9050	9050	9055	9055	9060	9060	9060	9070	9070	9070	9070	9075	9075	9080	9085	9085			2	
9035	9040	9040	9040	9050	9050	9050	9050	9055	9055	9060	9060	9070	9070	9070	9070	9075	9075	9075	1	22kW 4P
9035	9040	9050	9050	9050	9050	9055	9055	9060	9070	9070	9070	9070	9070	9075	9075	9080	9085	9085	1.25	
9050	9050	9050	9055	9055	9060	9060	9060	9070	9070	9070	9070	9070	9075	9075	9080	9085	9085		1.5	
9050	9050	9055	9055	9060	9060	9070	9070	9070	9075	9075	9080	9080	9080	9085	9085				2	
9040	9040	9050	9050	9050	9055	9055	9055	9060	9070	9070	9070	9070	9070	9075	9075	9080	9085	9085	1	30kW 4P
9050	9050	9050	9055	9055	9060	9060	9060	9070	9070	9070	9070	9075	9075	9080	9085	9085			1.25	
9050	9050	9055	9055	9060	9060	9070	9070	9070	9075	9075	9080	9080	9080	9085	9085				1.5	
9055	9055	9060	9070	9070	9070	9070	9070	9075	9075	9080	9085	9085	9085						2	
9050	9050	9050	9055	9055	9060	9060	9060	9070	9070	9070	9070	9075	9075	9080	9085	9085			1	37kW 4P
9050	9050	9055	9055	9070	9070	9070	9070	9070	9075	9075	9080	9080	9085	9085	9085				1.25	
9055	9055	9060	9070	9070	9070	9070	9070	9075	9075	9080	9080	9085	9085						1.5	
9060	9070	9070	9070	9070	9070	9075	9075	9080	9085	9085									2	
9050	9055	9055	9055	9060	9060	9070	9070	9070	9075	9075	9080	9080	9080	9085	9085				1	45kW 4P
9055	9055	9060	9070	9070	9070	9070	9070	9075	9075	9080	9080	9085	9085						1.25	
9060	9060	9070	9070	9070	9070	9075	9075	9075	9080	9085	9085								1.5	
9070	9070	9070	9075	9075	9080	9080	9080	9085	9085										2	
9055	9055	9060	9070	9070	9070	9070	9070	9075	9075	9080	9080	9085	9085						1	55kW 4P
9060	9070	9070	9070	9070	9070	9075	9075	9075	9085	9085									1.25	
9070	9070	9070	9075	9075	9080	9080	9080	9085	9085										1.5	
9070	9075	9075	9080	9080	9080	9085	9085												2	

MOTOR	5.5 kW
	4P

Frequency								Model			Page of Dimension Sheet		
50Hz				60Hz									
Output Speed r/min	Output Torque Tout Nm	Output Torque Tout kgf m	S F	Output Speed r/min	Output Torque Tout Nm	Output Torque Tout kgf m	S F	Size	Assembly	Reduction Ratio	Horizontal	Vertical	Upright
47.6	1100	113	4.89	57.1	919	94	5.81	9030	R3	31.5	B-44	B-54	B-64
42.3	1240	127	4.89	50.7	1040	106	5.81	9030	R3	35.5	B-44	B-54	B-64
37.5	1400	143	4.69	45.0	1170	119	5.45	9030	R3	40	B-44	B-54	B-64
			4.89				5.81	9035	R3	40	B-44	B-54	B-64
33.3	1580	161	4.21	40.0	1310	134	5.05	9030	R3	45	B-44	B-54	B-64
			4.89				5.81	9035	R3	45	B-44	B-54	B-64
30.0	1750	179	2.92	36.0	1460	149	3.50	9030	R3	50	B-44	B-54	B-64
			4.89				5.81	9035	R3	50	B-44	B-54	B-64
			4.74				5.69	9040	R3	50	B-44	B-54	B-64
26.8	1960	200	2.92	32.1	1630	167	3.50	9030	R3	56	B-44	B-54	B-64
			4.47				5.34	9035	R3	56	B-44	B-54	B-64
			4.74				5.69	9040	R3	56	B-44	B-54	B-64
23.8	2210	225	2.92	28.6	1840	188	3.50	9030	R3	63	B-44	B-54	B-64
			4.74				5.69	9040	R3	63	B-44	B-54	B-64
21.1	2490	254	2.69	25.4	2070	212	3.21	9030	R3	71	B-44	B-54	B-64
			2.92				3.50	9035	R3	71	B-44	B-54	B-64
			3.98				4.76	9040	R3	71	B-44	B-54	B-64
18.8	2800	286	2.92	22.5	2330	238	3.50	9035	R3	80	B-44	B-54	B-64
			3.89				4.65	9040	R4	80	B-48	B-58	B-68
			4.60				5.45	9050	R4	80	B-48	B-58	B-68
16.7	3150	322	2.85	20.0	2630	268	3.41	9035	R3	90	B-44	B-54	B-64
			3.18				3.81	9040	R4	90	B-48	B-58	B-68
			4.60				5.45	9050	R4	90	B-48	B-58	B-68
15.0	3500	358	3.05	18.0	2920	298	3.65	9040	R4	100	B-48	B-58	B-68
			4.52				5.41	9050	R4	100	B-48	B-58	B-68
13.4	3920	400	2.50	16.1	3270	334	3.00	9040	R4	112	B-48	B-58	B-68
			3.70				4.45	9050	R4	112	B-48	B-58	B-68
			4.60				5.45	9055	R4	112	B-48	B-58	B-68
12.0	4380	447	2.47	14.4	3650	372	2.96	9040	R4	125	B-48	B-58	B-68
			3.61				4.34	9050	R4	125	B-48	B-58	B-68
			4.60				5.45	9055	R4	125	B-48	B-58	B-68
10.7	4900	501	2.03	12.9	4090	417	2.43	9040	R4	140	B-48	B-58	B-68
			2.98				3.56	9050	R4	140	B-48	B-58	B-68
			3.89				4.65	9055	R4	140	B-48	B-58	B-68
			4.65				5.45	9060	R4	140	B-50	B-60	B-70
9.4	5600	572	2.60	11.3	4670	477	3.10	9050	R4	160	B-48	B-58	B-68
			3.87				4.63	9055	R4	160	B-48	B-58	B-68
8.3	6300	644	2.43	10.0	5250	536	2.92	9050	R4	180	B-48	B-58	B-68
			3.10				3.72	9055	R4	180	B-48	B-58	B-68
			3.80				4.56	9060	R4	180	B-50	B-60	B-70
7.5	7000	715	2.27	9.0	5840	596	2.72	9050	R4	200	B-48	B-58	B-68
			3.69				4.41	9060	R4	200	B-50	B-60	B-70
6.7	7840	801	1.87	8.0	6540	667	2.23	9050	R4	224	B-48	B-58	B-68
			2.90				3.49	9060	R4	224	B-50	B-60	B-70
6.0	8750	894	1.81	7.2	7300	745	2.18	9050	R4	250	B-48	B-58	B-68
			2.96				3.56	9060	R4	250	B-50	B-60	B-70
			4.69				5.45	9070	R4	250	B-50	B-60	B-70
5.4	9800	1000	1.94	6.4	8170	834	2.34	9055	R4	280	B-48	B-58	B-68
			2.34				2.80	9060	R4	280	B-50	B-60	B-70
			3.90				4.67	9070	R4	280	B-50	B-60	B-70
4.8	11030	1130	1.40	5.7	9190	938	1.67	9050	R4	315	B-48	B-58	B-68
			1.94				2.32	9055	R4	315	B-48	B-58	B-68
			2.09				2.50	9060	R4	315	B-50	B-60	B-70
			3.40				4.09	9070	R4	315	B-50	B-60	B-70
			4.94				5.81	9075	R4	315	B-50	B-60	B-70

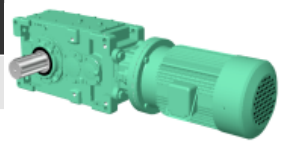

Frequency								Model			Page of Dimension Sheet		
50Hz				60Hz									
Output Speed r/min	Output Torque Tout Nm	Output Torque Tout kgf m	S F	Output Speed r/min	Output Torque Tout Nm	Output Torque Tout kgf m	S F	Size	Assembly	Reduction Ratio	Horizontal	Vertical	Upright
4.2	12430	1270	1.20	5.1	10360	1060	1.45	9050	R4	355	B-48	B-58	B-68
			1.56				1.87	9055	R4	355	B-48	B-58	B-68
			1.89				2.27	9060	R4	355	B-50	B-60	B-70
			3.20				3.83	9070	R4	355	B-50	B-60	B-70
			4.14				4.96	9075	R4	355	B-50	B-60	B-70
			4.70				5.63	9080	R4	355	B-50	B-60	B-70
3.8	14010	1430	1.47	4.5	11670	1190	1.76	9055	R4	400	B-48	B-58	B-68
			3.61				4.32	9075	R4	400	B-50	B-60	B-70
3.3	15760	1610	1.25	4.0	13130	1340	1.50	9055	R4	450	B-48	B-58	B-68
			3.38				4.07	9075	R4	450	B-50	B-60	B-70
			4.92				5.81	9085	R4	450	B-50	B-60	B-70

MOTOR	7.5 kW
	4P

Frequency								Model			Page of Dimension Sheet		
50Hz				60Hz									
Output Speed r/min	Output Torque Tout Nm	Output Torque Tout kgf m	S F	Output Speed r/min	Output Torque Tout Nm	Output Torque Tout kgf m	S F	Size	Assembly	Reduction Ratio	Horizontal	Vertical	Upright
53.6	1340	137	4.93	64.3	1110	114	5.86	9030	R3	28	B-44	B-54	B-64
47.6	1500	154	3.58	57.1	1250	128	4.26	9030	R3	31.5	B-44	B-54	B-64
42.3	1700	173	3.58	50.7	1410	144	4.26	9030	R3	35.5	B-44	B-54	B-64
37.5	1910	195	3.44	45	1590	163	4.00	9030	R3	40	B-44	B-54	B-64
			3.58				4.26	9035	R3	40	B-44	B-54	B-64
33.3	2150	219	3.09	40	1790	183	3.70	9030	R3	45	B-44	B-54	B-64
			3.58				4.26	9035	R3	45	B-44	B-54	B-64
			4.57				5.48	9040	R3	45	B-44	B-54	B-64
30.0	2390	244	2.14	36	1990	203	2.57	9030	R3	50	B-44	B-54	B-64
			3.58				4.26	9035	R3	50	B-44	B-54	B-64
			3.48				4.17	9040	R3	50	B-44	B-54	B-64
26.8	2670	273	2.14	32.1	2230	228	2.57	9030	R3	56	B-44	B-54	B-64
			3.28				3.92	9035	R3	56	B-44	B-54	B-64
			3.48				4.17	9040	R3	56	B-44	B-54	B-64
23.8	3010	307	2.14	28.6	2510	256	2.57	9030	R3	63	B-44	B-54	B-64
			3.48				4.17	9040	R3	63	B-44	B-54	B-64
21.1	3390	346	1.97	25.4	2830	288	2.36	9030	R3	71	B-44	B-54	B-64
			2.14				2.57	9035	R3	71	B-44	B-54	B-64
			2.92				3.49	9040	R3	71	B-44	B-54	B-64
			4.26				5.20	9050	R3	71	B-44	B-54	B-64
18.8	3820	390	2.14	22.5	3180	325	2.57	9035	R3	80	B-44	B-54	B-64
			2.85				3.41	9040	R4	80	B-48	B-58	B-68
			3.37				4.00	9050	R4	80	B-48	B-58	B-68
			4.93				6.00	9060	R4	80	B-50	B-60	B-70
16.7	4300	439	2.09	20.0	3580	366	2.50	9035	R3	90	B-44	B-54	B-64
			2.33				2.80	9040	R4	90	B-48	B-58	B-68
			3.37				4.00	9050	R4	90	B-48	B-58	B-68
			4.53				5.46	9055	R3	90	B-44	B-54	B-64
			4.93				6.00	9060	R4	90	B-50	B-60	B-70
15.0	4780	488	2.24	18.0	3980	406	2.68	9040	R4	100	B-48	B-58	B-68
			3.32				3.97	9050	R4	100	B-48	B-58	B-68
			4.93				6.00	9060	R4	100	B-50	B-60	B-70
13.4	5350	546	1.84	16.1	4460	455	2.20	9040	R4	112	B-48	B-58	B-68
			2.72				3.26	9050	R4	112	B-48	B-58	B-68
			3.37				4.00	9055	R4	112	B-48	B-58	B-68
			4.13				5.06	9060	R4	112	B-50	B-60	B-70
12.0	5970	609	1.81	14.4	4970	508	2.17	9040	R4	125	B-48	B-58	B-68
			2.65				3.18	9050	R4	125	B-48	B-58	B-68
			3.37				4.00	9055	R4	125	B-48	B-58	B-68
			4.26				5.06	9060	R4	125	B-50	B-60	B-70

Frequency 50Hz Output Speed r/min	Output Torque Tout Nm	Output Torque Tout kgf m	S F	Frequency 60Hz Output Speed r/min	Output Torque Tout Nm	Output Torque Tout kgf m	S F	Model Size	Assembly	Reduction Ratio	Page of Dimension Sheet Horizontal	Vertical	Upright
10.7	6690	683	1.49	12.9	5570	569	1.78	9040	R4	140	B-48	B-58	B-68
			2.18				2.61	9050	R4	140	B-48	B-58	B-68
			2.85				3.41	9055	R4	140	B-48	B-58	B-68
			3.41				4.00	9060	R4	140	B-50	B-60	B-70
9.4	7640	780	1.90	11.3	6370	650	2.28	9050	R4	160	B-48	B-58	B-68
			2.84				3.40	9055	R4	160	B-48	B-58	B-68
			4.40				5.20	9070	R4	160	B-50	B-60	B-70
8.3	8600	878	1.78	10.0	7160	731	2.14	9050	R4	180	B-48	B-58	B-68
			2.28				2.73	9055	R4	180	B-48	B-58	B-68
			2.78				3.34	9060	R4	180	B-50	B-60	B-70
			4.40				5.20	9070	R4	180	B-50	B-60	B-70
7.5	9550	975	1.66	9.0	7960	813	2.00	9050	R4	200	B-48	B-58	B-68
			1.90				2.28	9055	R4	200	B-48	B-58	B-68
			2.70				3.24	9060	R4	200	B-50	B-60	B-70
			4.40				5.20	9070	R4	200	B-50	B-60	B-70
6.7	10700	1090	1.37	8.0	8910	910	1.64	9050	R4	224	B-48	B-58	B-68
			1.86				2.24	9055	R4	224	B-48	B-58	B-68
			2.13				2.56	9060	R4	224	B-50	B-60	B-70
			3.74				4.40	9070	R4	224	B-50	B-60	B-70
			4.40				5.20	9075	R4	224	B-50	B-60	B-70
6.0	11940	1220	1.33	7.2	9950	1020	1.60	9050	R4	250	B-48	B-58	B-68
			1.78				2.13	9055	R4	250	B-48	B-58	B-68
			2.17				2.61	9060	R4	250	B-50	B-60	B-70
			3.44				4.00	9070	R4	250	B-50	B-60	B-70
			4.40				5.20	9075	R4	250	B-50	B-60	B-70
5.4	13370	1370	1.09	6.4	11140	1140	1.32	9050	R4	280	B-48	B-58	B-68
			1.42				1.72	9055	R4	280	B-48	B-58	B-68
			1.72				2.05	9060	R4	280	B-50	B-60	B-70
			2.86				3.42	9070	R4	280	B-50	B-60	B-70
			3.97				4.66	9075	R4	280	B-50	B-60	B-70
			4.26				5.20	9080	R4	280	B-50	B-60	B-70
4.8	15040	1540	1.02	5.7	12530	1280	1.22	9050	R4	315	B-48	B-58	B-68
			1.42				1.70	9055	R4	315	B-48	B-58	B-68
			1.53				1.84	9060	R4	315	B-50	B-60	B-70
			2.49				3.00	9070	R4	315	B-50	B-60	B-70
			3.62				4.26	9075	R4	315	B-50	B-60	B-70
			3.85				4.53	9080	R4	315	B-50	B-60	B-70
4.2	16950	1730	0.88	5.1	14130	1440	1.06	9050	R4	355	B-48	B-58	B-68
			1.14				1.37	9055	R4	355	B-48	B-58	B-68
			1.38				1.66	9060	R4	355	B-50	B-60	B-70
			2.34				2.81	9070	R4	355	B-50	B-60	B-70
			3.04				3.64	9075	R4	355	B-50	B-60	B-70
			3.45				4.13	9080	R4	355	B-50	B-60	B-70
			4.53				5.46	9085	R4	355	B-50	B-60	B-70
3.8	19100	1950	1.07	4.5	15920	1630	1.29	9055	R4	400	B-48	B-58	B-68
			2.65				3.17	9075	R4	400	B-50	B-60	B-70
			4.00				4.80	9085	R4	400	B-50	B-60	B-70
3.3	21490	2190	0.92	4.0	17910	1830	1.10	9055	R4	450	B-48	B-58	B-68
			2.48				2.98	9075	R4	450	B-50	B-60	B-70
			3.61				4.26	9085	R4	450	B-50	B-60	B-70

MOTOR	11 kW
	4P

Frequency 50Hz Output Speed r/min	Output Torque Tout Nm	Output Torque Tout kgf m	S F	Frequency 60Hz Output Speed r/min	Output Torque Tout Nm	Output Torque Tout kgf m	S F	Model Size	Assembly	Reduction Ratio	Page of Dimension Sheet Horizontal	Vertical	Upright
93.8	1120	114	3.90	113	934	95	4.63	9030	R2	16	B-42	B-52	B-62
83.3	1260	129	3.90	100	1050	107	4.63	9030	R2	18	B-42	B-52	B-62
75.0	1400	143	4.63	90.0	1170	119	5.54	9030	R3	20	B-44	B-54	B-64

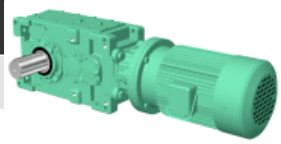

Frequency								Model			Page of Dimension Sheet		
50Hz				60Hz									
Output Speed r/min	Output Torque Tout Nm	Output Torque Tout kgf m	S F	Output Speed r/min	Output Torque Tout Nm	Output Torque Tout kgf m	S F	Size	Assembly	Reduction Ratio	Horizontal	Vertical	Upright
67.0	1570	160	4.18	80.4	1310	133	5.00	9030	R3	22.4	B-44	B-54	B-64
60.0	1750	179	3.72	72.0	1460	149	4.45	9030	R3	25	B-44	B-54	B-64
			4.90				5.81	9035	R3	25	B-44	B-54	B-64
53.6	1960	200	3.36	64.3	1630	167	4.00	9030	R3	28	B-44	B-54	B-64
			4.45				5.27	9035	R3	28	B-44	B-54	B-64
			5.00				5.90	9040	R3	28	B-44	B-54	B-64
47.6	2210	225	2.44	57.1	1840	188	2.90	9030	R3	31.5	B-44	B-54	B-64
			3.90				4.63	9035	R3	31.5	B-44	B-54	B-64
			4.37				5.18	9040	R3	31.5	B-44	B-54	B-64
42.3	2490	254	2.44	50.7	2070	212	2.90	9030	R3	35.5	B-44	B-54	B-64
			3.54				4.27	9035	R3	35.5	B-44	B-54	B-64
			3.81				4.63	9040	R3	35.5	B-44	B-54	B-64
37.5	2800	286	2.34	45.0	2330	238	2.72	9030	R3	40	B-44	B-54	B-64
			2.44				2.90	9035	R3	40	B-44	B-54	B-64
			3.72				4.55	9040	R3	40	B-44	B-54	B-64
33.3	3150	322	2.10	40.0	2630	268	2.52	9030	R3	45	B-44	B-54	B-64
			2.44				2.90	9035	R3	45	B-44	B-54	B-64
			3.11				3.73	9040	R3	45	B-44	B-54	B-64
			4.54				5.45	9050	R3	45	B-44	B-54	B-64
30.0	3500	358	1.46	36.0	2920	298	1.75	9030	R3	50	B-44	B-54	B-64
			2.44				2.90	9035	R3	50	B-44	B-54	B-64
			4.45				5.36	9050	R3	50	B-44	B-54	B-64
26.8	3920	400	1.46	32.1	3270	334	1.75	9030	R3	56	B-44	B-54	B-64
			2.23				2.67	9035	R3	56	B-44	B-54	B-64
			2.37				2.84	9040	R3	56	B-44	B-54	B-64
			3.63				4.36	9050	R3	56	B-44	B-54	B-64
			4.72				5.63	9055	R3	56	B-44	B-54	B-64
23.8	4410	450	1.46	28.6	3680	375	1.75	9030	R3	63	B-44	B-54	B-64
			2.37				2.84	9040	R3	63	B-44	B-54	B-64
			3.54				4.27	9050	R3	63	B-44	B-54	B-64
			4.72				5.72	9055	R3	63	B-44	B-54	B-64
21.1	4970	508	1.34	25.4	4140	423	1.60	9030	R3	71	B-44	B-54	B-64
			1.46				1.75	9035	R3	71	B-44	B-54	B-64
			1.99				2.38	9040	R3	71	B-44	B-54	B-64
			2.90				3.54	9050	R3	71	B-44	B-54	B-64
			3.81				4.54	9055	R3	71	B-44	B-54	B-64
			4.54				5.45	9060	R3	71	B-46	B-56	B-66
18.8	5600	572	1.46	22.5	4670	477	1.75	9035	R3	80	B-44	B-54	B-64
			1.94				2.32	9040	R4	80	B-48	B-58	B-68
			2.30				2.72	9050	R4	80	B-48	B-58	B-68
			3.81				4.63	9055	R3	80	B-44	B-54	B-64
16.7	6300	644	1.42	20.0	5250	536	1.70	9035	R3	90	B-44	B-54	B-64
			1.59				1.90	9040	R4	90	B-48	B-58	B-68
			2.30				2.72	9050	R4	90	B-48	B-58	B-68
			3.09				3.72	9055	R3	90	B-44	B-54	B-64
			3.36				4.09	9060	R4	90	B-50	B-60	B-70
15.0	7000	715	1.52	18.0	5840	596	1.82	9040	R4	100	B-48	B-58	B-68
			2.26				2.70	9050	R4	100	B-48	B-58	B-68
			3.36				4.09	9060	R4	100	B-50	B-60	B-70
13.4	7840	801	1.25	16.1	6540	667	1.50	9040	R4	112	B-48	B-58	B-68
			1.85				2.22	9050	R4	112	B-48	B-58	B-68
			2.30				2.72	9055	R4	112	B-48	B-58	B-68
			2.81				3.45	9060	R4	112	B-50	B-60	B-70
			4.90				5.90	9070	R4	112	B-50	B-60	B-70
12.0	8750	894	1.23	14.4	7300	745	1.48	9040	R4	125	B-48	B-58	B-68
			1.80				2.17	9050	R4	125	B-48	B-58	B-68
			2.30				2.72	9055	R4	125	B-48	B-58	B-68
			2.90				3.45	9060	R4	125	B-50	B-60	B-70
			4.54				5.45	9070	R4	125	B-50	B-60	B-70
10.7	9800	1000	1.01	12.9	8170	834	1.21	9040	R4	140	B-48	B-58	B-68
			1.49				1.78	9050	R4	140	B-48	B-58	B-68
			1.94				2.32	9055	R4	140	B-48	B-58	B-68
			2.32				2.72	9060	R4	140	B-50	B-60	B-70
			3.72				4.54	9070	R4	140	B-50	B-60	B-70

Frequency								Model			Page of Dimension Sheet		
50Hz				60Hz									
Output Speed r/min	Output Torque Tout Nm	Output Torque Tout kgf m	S F	Output Speed r/min	Output Torque Tout Nm	Output Torque Tout kgf m	S F	Size	Assembly	Reduction Ratio	Horizontal	Vertical	Upright
9.4	11210	1140	1.30	11.3	9340	953	1.55	9050	R4	160	B-48	B-58	B-68
			1.93				2.31	9055	R4	160	B-48	B-58	B-68
			3.00				3.54	9070	R4	160	B-50	B-60	B-70
			4.81				5.72	9075	R4	160	B-50	B-60	B-70
8.3	12610	1290	1.21	10.0	10510	1070	1.46	9050	R4	180	B-48	B-58	B-68
			1.55				1.86	9055	R4	180	B-48	B-58	B-68
			1.90				2.28	9060	R4	180	B-50	B-60	B-70
			3.00				3.54	9070	R4	180	B-50	B-60	B-70
			4.00				4.81	9075	R4	180	B-50	B-60	B-70
			4.72				5.63	9080	R4	180	B-50	B-60	B-70
7.5	14010	1430	1.13	9.0	11670	1190	1.36	9050	R4	200	B-48	B-58	B-68
			1.30				1.55	9055	R4	200	B-48	B-58	B-68
			1.84				2.20	9060	R4	200	B-50	B-60	B-70
			3.00				3.54	9070	R4	200	B-50	B-60	B-70
			4.45				5.36	9080	R4	200	B-50	B-60	B-70
6.7	15690	1600	0.93	8.0	13070	1330	1.11	9050	R4	224	B-48	B-58	B-68
			1.27				1.52	9055	R4	224	B-48	B-58	B-68
			1.45				1.74	9060	R4	224	B-50	B-60	B-70
			2.55				3.00	9070	R4	224	B-50	B-60	B-70
			3.00				3.54	9075	R4	224	B-50	B-60	B-70
			3.90				4.63	9080	R4	224	B-50	B-60	B-70
			4.90				5.90	9085	R4	224	B-50	B-60	B-70
6.0	17510	1790	0.90	7.2	14590	1490	1.09	9050	R4	250	B-48	B-58	B-68
			1.21				1.45	9055	R4	250	B-48	B-58	B-68
			1.48				1.78	9060	R4	250	B-50	B-60	B-70
			2.34				2.72	9070	R4	250	B-50	B-60	B-70
			3.00				3.54	9075	R4	250	B-50	B-60	B-70
			3.45				4.09	9080	R4	250	B-50	B-60	B-70
			4.72				5.63	9085	R4	250	B-50	B-60	B-70
5.4	19610	2000	0.97	6.4	16340	1670	1.17	9055	R4	280	B-48	B-58	B-68
			1.17				1.40	9060	R4	280	B-50	B-60	B-70
			1.95				2.33	9070	R4	280	B-50	B-60	B-70
			2.70				3.18	9075	R4	280	B-50	B-60	B-70
			2.90				3.54	9080	R4	280	B-50	B-60	B-70
			4.09				4.90	9085	R4	280	B-50	B-60	B-70
4.8	22060	2250	0.97	5.7	18380	1880	1.16	9055	R4	315	B-48	B-58	B-68
			1.04				1.25	9060	R4	315	B-50	B-60	B-70
			1.70				2.04	9070	R4	315	B-50	B-60	B-70
			2.47				2.90	9075	R4	315	B-50	B-60	B-70
			2.62				3.09	9080	R4	315	B-50	B-60	B-70
			3.63				4.36	9085	R4	315	B-50	B-60	B-70
4.2	24860	2540	0.94	5.1	20720	2120	1.13	9060	R4	355	B-50	B-60	B-70
			1.60				1.91	9070	R4	355	B-50	B-60	B-70
			2.07				2.48	9075	R4	355	B-50	B-60	B-70
			2.35				2.81	9080	R4	355	B-50	B-60	B-70
			3.09				3.72	9085	R4	355	B-50	B-60	B-70
3.8	28010	2860	1.80	4.5	23340	2380	2.16	9075	R4	400	B-50	B-60	B-70
			2.72				3.27	9085	R4	400	B-50	B-60	B-70
3.3	31520	3220	1.69	4.0	26260	2680	2.03	9075	R4	450	B-50	B-60	B-70
			2.46				2.90	9085	R4	450	B-50	B-60	B-70

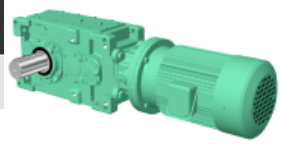

MOTOR	15 kW
	4P

Frequency								Model			Page of Dimension Sheet		
50Hz				60Hz									
Output Speed r/min	Output Torque Tout Nm	Output Torque Tout kgf m	S F	Output Speed r/min	Output Torque Tout Nm	Output Torque Tout kgf m	S F	Size	Assembly	Reduction Ratio	Horizontal	Vertical	Upright
120	1190	122	4.06	144	995	102	4.86	9030	R2	12.5	B-42	B-52	B-62
107	1340	137	4.06	129	1110	114	4.86	9030	R2	14	B-42	B-52	B-62
93.8	1530	156	2.86	113	1270	130	3.40	9030	R2	16	B-42	B-52	B-62
			4.06				4.86	9035	R2	16	B-42	B-52	B-62
			4.20				5.00	9040	R2	16	B-42	B-52	B-62
83.3	1720	176	2.86	100	1430	146	3.40	9030	R2	18	B-42	B-52	B-62
			4.06				4.86	9035	R2	18	B-42	B-52	B-62
			4.20				5.00	9040	R2	18	B-42	B-52	B-62
75.0	1910	195	3.40	90.0	1590	163	4.06	9030	R3	20	B-44	B-54	B-64
			4.46				5.20	9040	R3	20	B-44	B-54	B-64
67.0	2140	218	3.06	80.4	1780	182	3.66	9030	R3	22.4	B-44	B-54	B-64
			4.46				5.20	9040	R3	22.4	B-44	B-54	B-64
60.0	2390	244	2.73	72.0	1990	203	3.26	9030	R3	25	B-44	B-54	B-64
			3.60				4.26	9035	R3	25	B-44	B-54	B-64
			4.47				5.20	9040	R3	25	B-44	B-54	B-64
53.6	2670	273	2.46	64.3	2230	228	2.93	9030	R3	28	B-44	B-54	B-64
			3.26				3.86	9035	R3	28	B-44	B-54	B-64
			3.66				4.33	9040	R3	28	B-44	B-54	B-64
47.6	3010	307	1.79	57.1	2510	256	2.13	9030	R3	31.5	B-44	B-54	B-64
			2.86				3.40	9035	R3	31.5	B-44	B-54	B-64
			3.20				3.80	9040	R3	31.5	B-44	B-54	B-64
42.3	3390	346	1.79	50.7	2830	288	2.13	9030	R3	35.5	B-44	B-54	B-64
			2.60				3.13	9035	R3	35.5	B-44	B-54	B-64
			2.80				3.40	9040	R3	35.5	B-44	B-54	B-64
			4.33				5.20	9050	R3	35.5	B-44	B-54	B-64
37.5	3820	390	1.72	45.0	3180	325	2.00	9030	R3	40	B-44	B-54	B-64
			1.79				2.13	9035	R3	40	B-44	B-54	B-64
			2.73				3.34	9040	R3	40	B-44	B-54	B-64
			4.06				4.86	9050	R3	40	B-44	B-54	B-64
33.3	4300	439	1.54	40.0	3580	366	1.85	9030	R3	45	B-44	B-54	B-64
			1.79				2.13	9035	R3	45	B-44	B-54	B-64
			2.28				2.74	9040	R3	45	B-44	B-54	B-64
			3.33				4.00	9050	R3	45	B-44	B-54	B-64
			4.53				5.46	9055	R3	45	B-44	B-54	B-64
30.0	4780	488	1.07	36.0	3980	406	1.28	9030	R3	50	B-44	B-54	B-64
			1.79				2.13	9035	R3	50	B-44	B-54	B-64
			3.26				3.93	9050	R3	50	B-44	B-54	B-64
			4.33				5.20	9055	R3	50	B-44	B-54	B-64
			4.93				5.60	9060	R3	50	B-46	B-56	B-66
26.8	5350	546	1.07	32.1	4460	455	1.28	9030	R3	56	B-44	B-54	B-64
			1.64				1.96	9035	R3	56	B-44	B-54	B-64
			1.74				2.08	9040	R3	56	B-44	B-54	B-64
			2.66				3.20	9050	R3	56	B-44	B-54	B-64
			3.46				4.13	9055	R3	56	B-44	B-54	B-64
			4.26				5.13	9060	R3	56	B-46	B-56	B-66
23.8	6020	614	1.07	28.6	5010	512	1.28	9030	R3	63	B-44	B-54	B-64
			1.74				2.08	9040	R3	63	B-44	B-54	B-64
			2.60				3.13	9050	R3	63	B-44	B-54	B-64
			3.46				4.20	9055	R3	63	B-44	B-54	B-64
			4.00				4.53	9060	R3	63	B-46	B-56	B-66
21.1	6780	692	0.98	25.4	5650	577	1.18	9030	R3	71	B-44	B-54	B-64
			1.07				1.28	9035	R3	71	B-44	B-54	B-64
			1.46				1.74	9040	R3	71	B-44	B-54	B-64
			2.13				2.60	9050	R3	71	B-44	B-54	B-64
			2.80				3.33	9055	R3	71	B-44	B-54	B-64
			3.33				4.00	9060	R3	71	B-46	B-56	B-66

Frequency 50Hz				Frequency 60Hz				Model			Page of Dimension Sheet		
Output Speed r/min	Output Torque Tout Nm	Output Torque Tout kgf m	S F	Output Speed r/min	Output Torque Tout Nm	Output Torque Tout kgf m	S F	Size	Assembly	Reduction Ratio	Horizontal	Vertical	Upright
18.8	7640	780	1.07	22.5	6370	650	1.28	9035	R3	80	B-44	B-54	B-64
			1.42				1.70	9040	R4	80	B-48	B-58	B-68
			1.68				2.00	9050	R4	80	B-48	B-58	B-68
			2.80				3.40	9055	R3	80	B-44	B-54	B-64
			4.40				5.33	9070	R4	80	B-50	B-60	B-70
16.7	8600	878	1.04	20.0	7160	731	1.25	9035	R3	90	B-44	B-54	B-64
			1.16				1.40	9040	R4	90	B-48	B-58	B-68
			1.68				2.00	9050	R4	90	B-48	B-58	B-68
			2.26				2.73	9055	R3	90	B-44	B-54	B-64
			2.46				3.00	9060	R4	90	B-50	B-60	B-70
			4.40				5.33	9070	R4	90	B-50	B-60	B-70
15.0	9550	975	1.12	18.0	7960	813	1.34	9040	R4	100	B-48	B-58	B-68
			1.66				1.98	9050	R4	100	B-48	B-58	B-68
			2.46				3.00	9060	R4	100	B-50	B-60	B-70
			4.33				5.20	9070	R4	100	B-50	B-60	B-70
13.4	10700	1090	0.92	16.1	8910	910	1.10	9040	R4	112	B-48	B-58	B-68
			1.36				1.63	9050	R4	112	B-48	B-58	B-68
			1.68				2.00	9055	R4	112	B-48	B-58	B-68
			2.06				2.53	9060	R4	112	B-50	B-60	B-70
			3.60				4.33	9070	R4	112	B-50	B-60	B-70
			4.40				5.33	9075	R4	112	B-50	B-60	B-70
12.0	11940	1220	0.90	14.4	9950	1020	1.08	9040	R4	125	B-48	B-58	B-68
			1.32				1.59	9050	R4	125	B-48	B-58	B-68
			1.68				2.00	9055	R4	125	B-48	B-58	B-68
			2.13				2.53	9060	R4	125	B-50	B-60	B-70
			3.33				4.00	9070	R4	125	B-50	B-60	B-70
			4.40				5.33	9075	R4	125	B-50	B-60	B-70
			5.00				6.00	9080	R4	125	B-50	B-60	B-70
10.7	13370	1370	1.09	12.9	11140	1140	1.30	9050	R4	140	B-48	B-58	B-68
			1.42				1.70	9055	R4	140	B-48	B-58	B-68
			1.70				2.00	9060	R4	140	B-50	B-60	B-70
			2.73				3.33	9070	R4	140	B-50	B-60	B-70
			3.86				4.59	9075	R4	140	B-50	B-60	B-70
			4.33				5.20	9080	R4	140	B-50	B-60	B-70
9.4	15280	1560	0.95	11.3	12730	1300	1.14	9050	R4	160	B-48	B-58	B-68
			1.42				1.70	9055	R4	160	B-48	B-58	B-68
			2.20				2.60	9070	R4	160	B-50	B-60	B-70
			3.53				4.20	9075	R4	160	B-50	B-60	B-70
			3.80				4.53	9080	R4	160	B-50	B-60	B-70
8.3	17190	1760	0.89	10.0	14330	1460	1.07	9050	R4	180	B-48	B-58	B-68
			1.14				1.36	9055	R4	180	B-48	B-58	B-68
			1.39				1.67	9060	R4	180	B-50	B-60	B-70
			2.20				2.60	9070	R4	180	B-50	B-60	B-70
			2.93				3.53	9075	R4	180	B-50	B-60	B-70
			3.46				4.13	9080	R4	180	B-50	B-60	B-70
			4.53				5.46	9085	R4	180	B-50	B-60	B-70
7.5	19100	1950	0.83	9.0	15920	1630	1.00	9050	R4	200	B-48	B-58	B-68
			0.95				1.14	9055	R4	200	B-48	B-58	B-68
			1.35				1.62	9060	R4	200	B-50	B-60	B-70
			2.20				2.60	9070	R4	200	B-50	B-60	B-70
			3.26				3.93	9080	R4	200	B-50	B-60	B-70
			3.80				4.53	9085	R4	200	B-50	B-60	B-70
6.7	21390	2180	0.93	8.0	17830	1820	1.12	9055	R4	224	B-48	B-58	B-68
			1.06				1.28	9060	R4	224	B-50	B-60	B-70
			1.87				2.20	9070	R4	224	B-50	B-60	B-70
			2.20				2.60	9075	R4	224	B-50	B-60	B-70
			2.86				3.40	9080	R4	224	B-50	B-60	B-70
			3.60				4.33	9085	R4	224	B-50	B-60	B-70

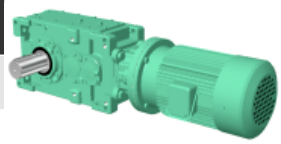

Frequency								Model			Page of Dimension Sheet		
50Hz				60Hz									
Output Speed r/min	Output Torque Tout Nm	Output Torque Tout kgf m	S F	Output Speed r/min	Tout Nm	Tout kgf m	S F	Size	Assembly	Reduction Ratio	Horizontal	Vertical	Upright
6.0	23880	2440	0.89	7.2	19900	2030	1.06	9055	R4	250	B-48	B-58	B-68
			1.08				1.30	9060	R4	250	B-50	B-60	B-70
			1.72				2.00	9070	R4	250	B-50	B-60	B-70
			2.20				2.60	9075	R4	250	B-50	B-60	B-70
			2.53				3.00	9080	R4	250	B-50	B-60	B-70
			3.46				4.13	9085	R4	250	B-50	B-60	B-70
5.4	26740	2730	0.86	6.4	22280	2280	1.02	9060	R4	280	B-50	B-60	B-70
			1.43				1.71	9070	R4	280	B-50	B-60	B-70
			1.98				2.33	9075	R4	280	B-50	B-60	B-70
			2.13				2.60	9080	R4	280	B-50	B-60	B-70
			3.00				3.60	9085	R4	280	B-50	B-60	B-70
4.8	30080	3070	1.24	5.7	25070	2560	1.50	9070	R4	315	B-50	B-60	B-70
			1.81				2.13	9075	R4	315	B-50	B-60	B-70
			1.92				2.26	9080	R4	315	B-50	B-60	B-70
			2.66				3.20	9085	R4	315	B-50	B-60	B-70
4.2	33900	3460	1.17	5.1	28250	2880	1.40	9070	R4	355	B-50	B-60	B-70
			1.52				1.82	9075	R4	355	B-50	B-60	B-70
			1.72				2.06	9080	R4	355	B-50	B-60	B-70
			2.26				2.73	9085	R4	355	B-50	B-60	B-70
3.8	38200	3900	1.32	4.5	31830	3250	1.58	9075	R4	400	B-50	B-60	B-70
			2.00				2.40	9085	R4	400	B-50	B-60	B-70
3.3	42980	4390	1.24	4.0	35810	3660	1.49	9075	R4	450	B-50	B-60	B-70
			1.80				2.13	9085	R4	450	B-50	B-60	B-70

MOTOR	18.5 kW
	4P

Frequency								Model			Page of Dimension Sheet		
50Hz				60Hz									
Output Speed r/min	Output Torque Tout Nm	Output Torque Tout kgf m	S F	Output Speed r/min	Output Torque Tout Nm	Output Torque Tout kgf m	S F	Size	Assembly	Reduction Ratio	Horizontal	Vertical	Upright
150	1180	120	4.75	180	982	100	5.40	9030	R2	10	B-42	B-52	B-62
134	1320	135	4.48	161	1100	112	5.40	9030	R2	11.2	B-42	B-52	B-62
120	1470	150	3.29	144	1230	125	3.94	9030	R2	12.5	B-42	B-52	B-62
			4.37				5.24	9040	R2	12.5	B-42	B-52	B-62
			4.75				5.40	9035	R2	12.5	B-42	B-52	B-62
107	1650	168	3.29	129	1370	140	3.94	9030	R2	14	B-42	B-52	B-62
			4.75				5.40	9035	R2	14	B-42	B-52	B-62
93.8	1880	192	2.32	113	1570	160	2.75	9030	R2	16	B-42	B-52	B-62
			3.29				3.94	9035	R2	16	B-42	B-52	B-62
			3.40				4.05	9040	R2	16	B-42	B-52	B-62
83.3	2120	216	2.32	100	1770	180	2.75	9030	R2	18	B-42	B-52	B-62
			3.29				3.94	9035	R2	18	B-42	B-52	B-62
			3.40				4.05	9040	R2	18	B-42	B-52	B-62
75.0	2360	241	2.75	90.0	1960	200	3.29	9030	R3	20	B-44	B-54	B-64
			3.62				4.21	9040	R3	20	B-44	B-54	B-64
67.0	2640	269	2.48	80.4	2200	224	2.97	9030	R3	22.4	B-44	B-54	B-64
			3.62				4.21	9040	R3	22.4	B-44	B-54	B-64
60.0	2940	301	2.21	72.0	2450	251	2.64	9030	R3	25	B-44	B-54	B-64
			2.91				3.45	9035	R3	25	B-44	B-54	B-64
			3.62				4.21	9040	R3	25	B-44	B-54	B-64
53.6	3300	337	2.00	64.3	2750	281	2.37	9030	R3	28	B-44	B-54	B-64
			2.64				3.13	9035	R3	28	B-44	B-54	B-64
			2.97				3.51	9040	R3	28	B-44	B-54	B-64
			4.32				5.18	9050	R3	28	B-44	B-54	B-64
47.6	3710	379	1.45	57.1	3090	316	1.72	9030	R3	31.5	B-44	B-54	B-64
			2.32				2.75	9035	R3	31.5	B-44	B-54	B-64
			2.60				3.08	9040	R3	31.5	B-44	B-54	B-64
			4.27				4.91	9050	R3	31.5	B-44	B-54	B-64

Frequency 50Hz				Frequency 60Hz				Model			Page of Dimension Sheet		
Output Speed r/min	Output Torque Tout Nm	Output Torque Tout kgf m	S F	Output Speed r/min	Output Torque Tout Nm	Output Torque Tout kgf m	S F	Size	Assembly	Reduction Ratio	Horizontal	Vertical	Upright
42.3	4180	427	1.45	50.7	3480	356	1.72	9030	R3	35.5	B-44	B-54	B-64
			2.10				2.54	9035	R3	35.5	B-44	B-54	B-64
			2.27				2.75	9040	R3	35.5	B-44	B-54	B-64
			3.51				4.21	9050	R3	35.5	B-44	B-54	B-64
			4.54				5.40	9055	R3	35.5	B-44	B-54	B-64
37.5	4710	481	1.39	45.0	3930	401	1.62	9030	R3	40	B-44	B-54	B-64
			1.45				1.72	9035	R3	40	B-44	B-54	B-64
			2.21				2.70	9040	R3	40	B-44	B-54	B-64
			3.29				3.94	9050	R3	40	B-44	B-54	B-64
			4.27				4.91	9055	R3	40	B-44	B-54	B-64
33.3	5300	541	1.25	40.0	4420	451	1.50	9030	R3	45	B-44	B-54	B-64
			1.45				1.72	9035	R3	45	B-44	B-54	B-64
			1.85				2.22	9040	R3	45	B-44	B-54	B-64
			2.70				3.24	9050	R3	45	B-44	B-54	B-64
			3.67				4.43	9055	R3	45	B-44	B-54	B-64
			4.37				5.24	9060	R3	45	B-46	B-56	B-66
30.0	5890	601	0.87	36.0	4910	501	1.04	9030	R3	50	B-44	B-54	B-64
			1.45				1.72	9035	R3	50	B-44	B-54	B-64
			2.64				3.18	9050	R3	50	B-44	B-54	B-64
			3.51				4.21	9055	R3	50	B-44	B-54	B-64
			4.00				4.54	9060	R3	50	B-46	B-56	B-66
26.8	6600	673	0.87	32.1	5500	561	1.04	9030	R3	56	B-44	B-54	B-64
			1.32				1.58	9035	R3	56	B-44	B-54	B-64
			1.41				1.69	9040	R3	56	B-44	B-54	B-64
			2.16				2.59	9050	R3	56	B-44	B-54	B-64
			2.81				3.35	9055	R3	56	B-44	B-54	B-64
			3.45				4.16	9060	R3	56	B-46	B-56	B-66
23.8	7420	758	0.87	28.6	6180	631	1.04	9030	R3	63	B-44	B-54	B-64
			1.41				1.69	9040	R3	63	B-44	B-54	B-64
			2.10				2.54	9050	R3	63	B-44	B-54	B-64
			2.81				3.40	9055	R3	63	B-44	B-54	B-64
			3.24				3.67	9060	R3	63	B-46	B-56	B-66
			4.75				5.40	9070	R3	63	B-46	B-56	B-66
21.1	8360	854	0.87	25.4	6970	711	1.04	9035	R3	71	B-44	B-54	B-64
			1.18				1.41	9040	R3	71	B-44	B-54	B-64
			1.72				2.10	9050	R3	71	B-44	B-54	B-64
			2.27				2.70	9055	R3	71	B-44	B-54	B-64
			2.70				3.24	9060	R3	71	B-46	B-56	B-66
			4.54				5.40	9070	R3	71	B-46	B-56	B-66
18.8	9420	962	0.87	22.5	7850	802	1.04	9035	R3	80	B-44	B-54	B-64
			1.15				1.38	9040	R4	80	B-48	B-58	B-68
			1.36				1.62	9050	R4	80	B-48	B-58	B-68
			2.27				2.75	9055	R3	80	B-44	B-54	B-64
			3.56				4.32	9070	R4	80	B-50	B-60	B-70
			4.75				5.40	9075	R3	80	B-46	B-56	B-66
16.7	10600	1080	0.84	20.0	8830	902	1.01	9035	R3	90	B-44	B-54	B-64
			0.94				1.13	9040	R4	90	B-48	B-58	B-68
			1.36				1.62	9050	R4	90	B-48	B-58	B-68
			1.83				2.21	9055	R3	90	B-44	B-54	B-64
			2.00				2.43	9060	R4	90	B-50	B-60	B-70
			3.56				4.32	9070	R4	90	B-50	B-60	B-70
			4.75				5.40	9075	R3	90	B-46	B-56	B-66
15.0	11780	1200	0.90	18.0	9820	1000	1.08	9040	R4	100	B-48	B-58	B-68
			1.34				1.61	9050	R4	100	B-48	B-58	B-68
			2.00				2.43	9060	R4	100	B-50	B-60	B-70
			3.51				4.21	9070	R4	100	B-50	B-60	B-70
13.4	13190	1350	1.10	16.1	10990	1120	1.32	9050	R4	112	B-48	B-58	B-68
			1.36				1.62	9055	R4	112	B-48	B-58	B-68
			1.67				2.05	9060	R4	112	B-50	B-60	B-70
			2.91				3.51	9070	R4	112	B-50	B-60	B-70
			3.56				4.32	9075	R4	112	B-50	B-60	B-70
			4.59				5.51	9080	R4	112	B-50	B-60	B-70

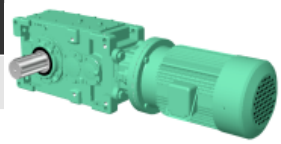

Frequency								Model			Page of Dimension Sheet		
50Hz				60Hz									
Output Speed r/min	Output Torque Tout Nm	Output Torque Tout kgf m	S F	Output Speed r/min	Output Torque Tout Nm	Output Torque Tout kgf m	S F	Size	Assembly	Reduction Ratio	Horizontal	Vertical	Upright
12.0	14720	1500	1.07	14.4	12270	1250	1.29	9050	R4	125	B-48	B-58	B-68
			1.36				1.62	9055	R4	125	B-48	B-58	B-68
			1.72				2.05	9060	R4	125	B-50	B-60	B-70
			2.70				3.24	9070	R4	125	B-50	B-60	B-70
			3.56				4.32	9075	R4	125	B-50	B-60	B-70
			4.05				4.86	9080	R4	125	B-50	B-60	B-70
10.7	16490	1680	0.88	12.9	13740	1400	1.05	9050	R4	140	B-48	B-58	B-68
			1.15				1.38	9055	R4	140	B-48	B-58	B-68
			1.38				1.62	9060	R4	140	B-50	B-60	B-70
			2.21				2.70	9070	R4	140	B-50	B-60	B-70
			3.13				3.72	9075	R4	140	B-50	B-60	B-70
			3.51				4.21	9080	R4	140	B-50	B-60	B-70
			4.81				5.78	9085	R4	140	B-50	B-60	B-70
9.4	18850	1920	1.15	11.3	15700	1600	1.37	9055	R4	160	B-48	B-58	B-68
			1.78				2.10	9070	R4	160	B-50	B-60	B-70
			2.86				3.40	9075	R4	160	B-50	B-60	B-70
			3.08				3.67	9080	R4	160	B-50	B-60	B-70
			4.27				5.13	9085	R4	160	B-50	B-60	B-70
8.3	21200	2160	0.92	10.0	17670	1800	1.10	9055	R4	180	B-48	B-58	B-68
			1.12				1.35	9060	R4	180	B-50	B-60	B-70
			1.78				2.10	9070	R4	180	B-50	B-60	B-70
			2.37				2.86	9075	R4	180	B-50	B-60	B-70
			2.81				3.35	9080	R4	180	B-50	B-60	B-70
			3.67				4.43	9085	R4	180	B-50	B-60	B-70
7.5	23560	2410	1.09	9.0	19630	2000	1.31	9060	R4	200	B-50	B-60	B-70
			1.78				2.10	9070	R4	200	B-50	B-60	B-70
			2.64				3.18	9080	R4	200	B-50	B-60	B-70
			3.08				3.67	9085	R4	200	B-50	B-60	B-70
6.7	26380	2690	0.86	8.0	21990	2240	1.03	9060	R4	224	B-50	B-60	B-70
			1.51				1.78	9070	R4	224	B-50	B-60	B-70
			1.78				2.10	9075	R4	224	B-50	B-60	B-70
			2.32				2.75	9080	R4	224	B-50	B-60	B-70
			2.91				3.51	9085	R4	224	B-50	B-60	B-70
6.0	29450	3010	0.88	7.2	24540	2510	1.05	9060	R4	250	B-50	B-60	B-70
			1.39				1.62	9070	R4	250	B-50	B-60	B-70
			1.78				2.10	9075	R4	250	B-50	B-60	B-70
			2.05				2.43	9080	R4	250	B-50	B-60	B-70
			2.81				3.35	9085	R4	250	B-50	B-60	B-70
5.4	32980	3370	1.16	6.4	27480	2810	1.38	9070	R4	280	B-50	B-60	B-70
			1.61				1.89	9075	R4	280	B-50	B-60	B-70
			1.72				2.10	9080	R4	280	B-50	B-60	B-70
			2.43				2.91	9085	R4	280	B-50	B-60	B-70
4.8	37100	3790	1.01	5.7	30920	3160	1.21	9070	R4	315	B-50	B-60	B-70
			1.47				1.72	9075	R4	315	B-50	B-60	B-70
			1.56				1.83	9080	R4	315	B-50	B-60	B-70
			2.16				2.59	9085	R4	315	B-50	B-60	B-70
4.2	41810	4270	0.95	5.1	34840	3560	1.14	9070	R4	355	B-50	B-60	B-70
			1.23				1.47	9075	R4	355	B-50	B-60	B-70
			1.40				1.67	9080	R4	355	B-50	B-60	B-70
			1.83				2.21	9085	R4	355	B-50	B-60	B-70
3.8	47110	4810	1.07	4.5	39260	4010	1.28	9075	R4	400	B-50	B-60	B-70
			1.62				1.94	9085	R4	400	B-50	B-60	B-70
3.3	53000	5410	1.00	4.0	44170	4510	1.21	9075	R4	450	B-50	B-60	B-70
			1.46				1.72	9085	R4	450	B-50	B-60	B-70

MOTOR	22 kW
	4P

Frequency								Model			Page of Dimension Sheet		
50Hz				60Hz									
Output Speed r/min	Output Torque Tout Nm	Output Torque Tout kgf m	S F	Output Speed r/min	Output Torque Tout Nm	Output Torque Tout kgf m	S F	Size	Assembly	Reduction Ratio	Horizontal	Vertical	Upright
238	882	90	4.68	286	735	75	5.45	9030	R2	6.3	B-42	B-52	B-62
211	994	102	4.68	254	829	85	5.45	9030	R2	7.1	B-42	B-52	B-62
188	1120	114	4.45	225	934	95	5.13	9030	R2	8	B-42	B-52	B-62
			4.68				5.45	9035	R2	8	B-42	B-52	B-62
167	1260	129	4.45	200	1050	107	5.13	9030	R2	9	B-42	B-52	B-62
			4.68				5.45	9035	R2	9	B-42	B-52	B-62
150	1400	143	4.00	180	1170	119	4.54	9030	R2	10	B-42	B-52	B-62
			4.45				5.13	9035	R2	10	B-42	B-52	B-62
134	1570	160	3.77	161	1310	133	4.54	9030	R2	11.2	B-42	B-52	B-62
			4.45				5.13	9035	R2	11.2	B-42	B-52	B-62
120	1750	179	2.77	144	1460	149	3.31	9030	R2	12.5	B-42	B-52	B-62
			4.00				4.54	9035	R2	12.5	B-42	B-52	B-62
107	1960	200	2.77	129	1630	167	3.31	9030	R2	14	B-42	B-52	B-62
			4.00				4.54	9035	R2	14	B-42	B-52	B-62
93.8	2240	229	1.95	113	1870	191	2.31	9030	R2	16	B-42	B-52	B-62
			2.77				3.31	9035	R2	16	B-42	B-52	B-62
			2.86				3.40	9040	R2	16	B-42	B-52	B-62
83.3	2520	257	1.95	100	2100	215	2.31	9030	R2	18	B-42	B-52	B-62
			2.77				3.31	9035	R2	18	B-42	B-52	B-62
			2.86				3.40	9040	R2	18	B-42	B-52	B-62
75.0	2800	286	2.31	90.0	2330	238	2.77	9030	R3	20	B-44	B-54	B-64
			3.04				3.54	9040	R3	20	B-44	B-54	B-64
			4.31				4.90	9050	R3	20	B-44	B-54	B-64
			4.95				5.59	9060	R3	20	B-46	B-56	B-66
67.0	3140	320	2.09	80.4	2610	267	2.50	9030	R3	22.4	B-44	B-54	B-64
			3.04				3.54	9040	R3	22.4	B-44	B-54	B-64
			4.31				4.90	9050	R3	22.4	B-44	B-54	B-64
			4.95				5.59	9060	R3	22.4	B-46	B-56	B-66
60.0	3500	358	1.86	72.0	2920	298	2.22	9030	R3	25	B-44	B-54	B-64
			2.45				2.90	9035	R3	25	B-44	B-54	B-64
			3.05				3.54	9040	R3	25	B-44	B-54	B-64
			4.31				4.90	9050	R3	25	B-44	B-54	B-64
			4.95				5.59	9060	R3	25	B-46	B-56	B-66
53.6	3920	400	1.68	64.3	3270	334	2.00	9030	R3	28	B-44	B-54	B-64
			2.22				2.63	9035	R3	28	B-44	B-54	B-64
			2.50				2.95	9040	R3	28	B-44	B-54	B-64
			3.63				4.36	9050	R3	28	B-44	B-54	B-64
			4.31				4.90	9055	R3	28	B-44	B-54	B-64
			4.95				5.59	9060	R3	28	B-46	B-56	B-66
47.6	4410	450	1.22	57.1	3680	375	1.45	9030	R3	31.5	B-44	B-54	B-64
			1.95				2.31	9035	R3	31.5	B-44	B-54	B-64
			2.18				2.59	9040	R3	31.5	B-44	B-54	B-64
			3.59				4.13	9050	R3	31.5	B-44	B-54	B-64
			4.31				4.90	9055	R3	31.5	B-44	B-54	B-64
42.3	4970	508	1.22	50.7	4140	423	1.45	9030	R3	35.5	B-44	B-54	B-64
			1.77				2.13	9035	R3	35.5	B-44	B-54	B-64
			1.90				2.31	9040	R3	35.5	B-44	B-54	B-64
			2.95				3.54	9050	R3	35.5	B-44	B-54	B-64
			3.81				4.54	9055	R3	35.5	B-44	B-54	B-64
			4.22				4.77	9060	R3	35.5	B-46	B-56	B-66
37.5	5600	572	1.17	45.0	4670	477	1.36	9030	R3	40	B-44	B-54	B-64
			1.22				1.45	9035	R3	40	B-44	B-54	B-64
			1.86				2.27	9040	R3	40	B-44	B-54	B-64
			2.77				3.31	9050	R3	40	B-44	B-54	B-64
			3.59				4.13	9055	R3	40	B-44	B-54	B-64
			4.22				4.77	9060	R3	40	B-46	B-56	B-66

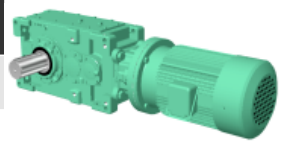

Frequency								Model			Page of Dimension Sheet		
50Hz				60Hz									
Output Speed r/min	Output Torque Tout Nm	Output Torque Tout kgf m	S F	Output Speed r/min	Output Torque Tout Nm	Output Torque Tout kgf m	S F	Size	Assembly	Reduction Ratio	Horizontal	Vertical	Upright
33.3	6300	644	1.05	40.0	5250	536	1.26	9030	R3	45	B-44	B-54	B-64
			1.22				1.45	9035	R3	45	B-44	B-54	B-64
			1.55				1.86	9040	R3	45	B-44	B-54	B-64
			2.27				2.72	9050	R3	45	B-44	B-54	B-64
			3.09				3.72	9055	R3	45	B-44	B-54	B-64
			3.68				4.40	9060	R3	45	B-46	B-56	B-66
30.0	7000	715	1.22	36.0	5840	596	1.45	9035	R3	50	B-44	B-54	B-64
			2.22				2.68	9050	R3	50	B-44	B-54	B-64
			2.95				3.54	9055	R3	50	B-44	B-54	B-64
			3.36				3.81	9060	R3	50	B-46	B-56	B-66
			4.90				5.59	9070	R3	50	B-46	B-56	B-66
26.8	7840	801	1.11	32.1	6540	667	1.33	9035	R3	56	B-44	B-54	B-64
			1.18				1.42	9040	R3	56	B-44	B-54	B-64
			1.81				2.18	9050	R3	56	B-44	B-54	B-64
			2.36				2.81	9055	R3	56	B-44	B-54	B-64
			2.90				3.50	9060	R3	56	B-46	B-56	B-66
			4.86				5.59	9070	R3	56	B-46	B-56	B-66
23.8	8820	901	1.18	28.6	7350	751	1.42	9040	R3	63	B-44	B-54	B-64
			1.77				2.13	9050	R3	63	B-44	B-54	B-64
			2.36				2.86	9055	R3	63	B-44	B-54	B-64
			2.72				3.09	9060	R3	63	B-46	B-56	B-66
			4.00				4.54	9070	R3	63	B-46	B-56	B-66
			4.90				5.59	9075	R3	63	B-46	B-56	B-66
21.1	9940	1020	0.99	25.4	8290	846	1.19	9040	R3	71	B-44	B-54	B-64
			1.45				1.77	9050	R3	71	B-44	B-54	B-64
			1.90				2.27	9055	R3	71	B-44	B-54	B-64
			2.27				2.72	9060	R3	71	B-46	B-56	B-66
			3.81				4.54	9070	R3	71	B-46	B-56	B-66
			4.90				5.59	9075	R3	71	B-46	B-56	B-66
18.8	11210	1140	0.97	22.5	9340	953	1.16	9040	R4	80	B-48	B-58	B-68
			1.15				1.36	9050	R4	80	B-48	B-58	B-68
			1.90				2.31	9055	R3	80	B-44	B-54	B-64
			3.00				3.63	9070	R4	80	B-50	B-60	B-70
			4.00				4.54	9075	R3	80	B-46	B-56	B-66
			4.54				5.13	9080	R4	80	B-50	B-60	B-70
16.7	12610	1290	1.15	20.0	10510	1070	1.36	9050	R4	90	B-48	B-58	B-68
			1.54				1.86	9055	R3	90	B-44	B-54	B-64
			1.68				2.04	9060	R4	90	B-50	B-60	B-70
			3.00				3.63	9070	R4	90	B-50	B-60	B-70
			4.00				4.54	9075	R3	90	B-46	B-56	B-66
			4.54				5.13	9080	R4	90	B-50	B-60	B-70
15.0	14010	1430	1.13	18.0	11670	1190	1.35	9050	R4	100	B-48	B-58	B-68
			1.68				2.04	9060	R4	100	B-50	B-60	B-70
			2.95				3.54	9070	R4	100	B-50	B-60	B-70
			4.50				5.13	9080	R4	100	B-50	B-60	B-70
13.4	15690	1600	0.92	16.1	13070	1330	1.11	9050	R4	112	B-48	B-58	B-68
			1.15				1.36	9055	R4	112	B-48	B-58	B-68
			1.40				1.72	9060	R4	112	B-50	B-60	B-70
			2.45				2.95	9070	R4	112	B-50	B-60	B-70
			3.00				3.63	9075	R4	112	B-50	B-60	B-70
			3.86				4.63	9080	R4	112	B-50	B-60	B-70
			4.54				5.13	9085	R4	112	B-50	B-60	B-70
12.0	17510	1790	0.90	14.4	14590	1490	1.08	9050	R4	125	B-48	B-58	B-68
			1.15				1.36	9055	R4	125	B-48	B-58	B-68
			1.45				1.72	9060	R4	125	B-50	B-60	B-70
			2.27				2.72	9070	R4	125	B-50	B-60	B-70
			3.00				3.63	9075	R4	125	B-50	B-60	B-70
			3.40				4.09	9080	R4	125	B-50	B-60	B-70
			4.54				5.13	9085	R4	125	B-50	B-60	B-70

Frequency								Model			Page of Dimension Sheet		
50Hz				60Hz									
Output Speed r/min	Output Torque Tout Nm	Output Torque Tout kgf m	S F	Output Speed r/min	Output Torque Tout Nm	Output Torque Tout kgf m	S F	Size	Assembly	Reduction Ratio	Horizontal	Vertical	Upright
10.7	19610	2000	0.97	12.9	16340	1670	1.16	9055	R4	140	B-48	B-58	B-68
			1.16				1.36	9060	R4	140	B-50	B-60	B-70
			1.86				2.27	9070	R4	140	B-50	B-60	B-70
			2.63				3.13	9075	R4	140	B-50	B-60	B-70
			2.95				3.54	9080	R4	140	B-50	B-60	B-70
			4.04				4.86	9085	R4	140	B-50	B-60	B-70
9.4	22410	2290	0.96	11.3	18680	1910	1.15	9055	R4	160	B-48	B-58	B-68
			1.50				1.77	9070	R4	160	B-50	B-60	B-70
			2.40				2.86	9075	R4	160	B-50	B-60	B-70
			2.59				3.09	9080	R4	160	B-50	B-60	B-70
			3.59				4.31	9085	R4	160	B-50	B-60	B-70
8.3	25210	2570	0.95	10.0	21010	2150	1.14	9060	R4	180	B-50	B-60	B-70
			1.50				1.77	9070	R4	180	B-50	B-60	B-70
			2.00				2.40	9075	R4	180	B-50	B-60	B-70
			2.36				2.81	9080	R4	180	B-50	B-60	B-70
			3.09				3.72	9085	R4	180	B-50	B-60	B-70
7.5	28010	2860	0.92	9.0	23340	2380	1.10	9060	R4	200	B-50	B-60	B-70
			1.50				1.77	9070	R4	200	B-50	B-60	B-70
			2.22				2.68	9080	R4	200	B-50	B-60	B-70
			2.59				3.09	9085	R4	200	B-50	B-60	B-70
6.7	31370	3200	1.27	8.0	26150	2670	1.50	9070	R4	224	B-50	B-60	B-70
			1.50				1.77	9075	R4	224	B-50	B-60	B-70
			1.95				2.31	9080	R4	224	B-50	B-60	B-70
			2.45				2.95	9085	R4	224	B-50	B-60	B-70
6.0	35020	3580	1.17	7.2	29180	2980	1.36	9070	R4	250	B-50	B-60	B-70
			1.50				1.77	9075	R4	250	B-50	B-60	B-70
			1.72				2.04	9080	R4	250	B-50	B-60	B-70
			2.36				2.81	9085	R4	250	B-50	B-60	B-70
5.4	39220	4000	0.97	6.4	32680	3340	1.16	9070	R4	280	B-50	B-60	B-70
			1.35				1.59	9075	R4	280	B-50	B-60	B-70
			1.45				1.77	9080	R4	280	B-50	B-60	B-70
			2.04				2.45	9085	R4	280	B-50	B-60	B-70
4.8	44120	4500	0.85	5.7	36770	3750	1.02	9070	R4	315	B-50	B-60	B-70
			1.23				1.45	9075	R4	315	B-50	B-60	B-70
			1.31				1.54	9080	R4	315	B-50	B-60	B-70
			1.81				2.18	9085	R4	315	B-50	B-60	B-70
4.2	49720	5080	1.03	5.1	41440	4230	1.24	9075	R4	355	B-50	B-60	B-70
			1.17				1.40	9080	R4	355	B-50	B-60	B-70
			1.54				1.86	9085	R4	355	B-50	B-60	B-70
3.8	56030	5720	0.90	4.5	46690	4770	1.08	9075	R4	400	B-50	B-60	B-70
			1.36				1.63	9085	R4	400	B-50	B-60	B-70
3.3	63030	6440	0.84	4.0	52530	5360	1.01	9075	R4	450	B-50	B-60	B-70
			1.23				1.45	9085	R4	450	B-50	B-60	B-70

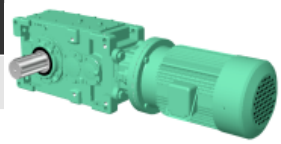

MOTOR	30 kW
	4P

* marked model upright type need additional cooling system for continuous operation.

Frequency								Model			Page of Dimension Sheet		
50Hz				60Hz									
Output Speed r/min	Output Torque Tout Nm	Output Torque Tout kgf m	S F	Output Speed r/min	Output Torque Tout Nm	Output Torque Tout kgf m	S F	Size	Assembly	Reduction Ratio	Horizontal	Vertical	Upright
238	1200	123	3.43	286	1000	102	4.00	9030	R2	6.3	B-42	B-52	B-62
			4.59				4.59	9040	R2	6.3	B-42	B-52	B-62
211	1360	138	3.43	254	1130	115	4.00	9030	R2	7.1	B-42	B-52	B-62
			4.59				4.59	9040	R2	7.1	B-42	B-52	B-62
188	1530	156	3.26	225	1270	130	3.76	9030	R2	8	B-42	B-52	B-62
			3.43				4.00	9035	R2	8	B-42	B-52	B-62
			4.13				4.59	9040	R2	8	B-42	B-52	B-62
167	1720	176	3.26	200	1430	146	3.76	9030	R2	9	B-42	B-52	B-62
			3.43				4.00	9035	R2	9	B-42	B-52	B-62
			4.13				4.59	9040	R2	9	B-42	B-52	B-62
150	1910	195	2.93	180	1590	163	3.33	9030	R2	10	B-42	B-52	B-62
			3.26				3.76	9035	R2	10	B-42	B-52	B-62
			3.76				4.26	9040	R2	10	B-42	B-52	B-62
134	2140	218	2.76	161	1780	182	3.33	9030	R2	11.2	B-42	B-52	B-62
			3.26				3.76	9035	R2	11.2	B-42	B-52	B-62
			3.76				4.26	9040	R2	11.2	B-42	B-52	B-62
120	2390	244	2.03	144	1990	203	2.43	9030	R2	12.5	B-42	B-52	B-62
			2.93				3.33	9035	R2	12.5	B-42	B-52	B-62
107	2670	273	2.03	129	2230	228	2.43	9030	R2	14	B-42	B-52	B-62
			2.93				3.33	9035	R2	14	B-42	B-52	B-62
93.8	3060	312	1.43	113	2550	260	1.70	*9030	R2	16	B-42	B-52	B-62
			2.03				2.43	9035	R2	16	B-42	B-52	B-62
			2.10				2.50	9040	R2	16	B-42	B-52	B-62
83.3	3440	351	1.43	100	2870	293	1.70	*9030	R2	18	B-42	B-52	B-62
			2.03				2.43	9035	R2	18	B-42	B-52	B-62
			2.10				2.50	9040	R2	18	B-42	B-52	B-62
75.0	3820	390	1.70	90.0	3180	325	2.03	9030	R3	20	B-44	B-54	B-64
			2.23				2.60	9040	R3	20	B-44	B-54	B-64
			3.16				3.60	9050	R3	20	B-44	B-54	B-64
			3.63				4.09	9060	R3	20	B-46	B-56	B-66
67.0	4280	437	1.53	80.4	3570	364	1.83	9030	R3	22.4	B-44	B-54	B-64
			2.23				2.60	9040	R3	22.4	B-44	B-54	B-64
			3.16				3.60	9050	R3	22.4	B-44	B-54	B-64
			3.63				4.09	9060	R3	22.4	B-46	B-56	B-66
60.0	4780	488	1.80	72.0	3980	406	2.13	9035	R3	25	B-44	B-54	B-64
			2.23				2.60	9040	R3	25	B-44	B-54	B-64
			3.16				3.60	9050	R3	25	B-44	B-54	B-64
			3.63				4.09	9060	R3	25	B-46	B-56	B-66
53.6	5350	546	1.63	64.3	4460	455	1.93	9035	R3	28	B-44	B-54	B-64
			1.83				2.16	9040	R3	28	B-44	B-54	B-64
			2.66				3.20	9050	R3	28	B-44	B-54	B-64
			3.16				3.60	9055	R3	28	B-44	B-54	B-64
			3.63				4.09	9060	R3	28	B-46	B-56	B-66
47.6	6020	614	1.43	57.1	5010	512	1.70	9035	R3	31.5	B-44	B-54	B-64
			1.60				1.90	9040	R3	31.5	B-44	B-54	B-64
			2.63				3.03	9050	R3	31.5	B-44	B-54	B-64
			3.10				3.50	9060	R3	31.5	B-46	B-56	B-66
			4.53				5.16	9070	R3	31.5	B-46	B-56	B-66
42.3	6780	692	1.30	50.7	5650	577	1.56	9035	R3	35.5	B-44	B-54	B-64
			1.40				1.70	9040	R3	35.5	B-44	B-54	B-64
			2.16				2.60	9050	R3	35.5	B-44	B-54	B-64
			2.80				3.33	9055	R3	35.5	B-44	B-54	B-64
			3.10				3.50	9060	R3	35.5	B-46	B-56	B-66
			4.53				5.16	9070	R3	35.5	B-46	B-56	B-66

Frequency								Model			Page of Dimension Sheet		
50Hz				60Hz									
Output Speed r/min	Output Torque Tout Nm	Output Torque Tout kgf m	S F	Output Speed r/min	Output Torque Tout Nm	Output Torque Tout kgf m	S F	Size	Assembly	Reduction Ratio	Horizontal	Vertical	Upright
37.5	7640	780	0.89	45.0	6370	650	1.06	9035	R3	40	B-44	B-54	B-64
			1.36				1.67	9040	R3	40	B-44	B-54	B-64
			2.03				2.43	9050	R3	40	B-44	B-54	B-64
			2.63				3.03	9055	R3	40	B-44	B-54	B-64
			3.10				3.50	9060	R3	40	B-46	B-56	B-66
			4.53				5.16	9070	R3	40	B-46	B-56	B-66
33.3	8600	878	0.89	40.0	7160	731	1.06	9035	R3	45	B-44	B-54	B-64
			1.14				1.37	9040	R3	45	B-44	B-54	B-64
			1.66				2.00	9050	R3	45	B-44	B-54	B-64
			2.26				2.73	9055	R3	45	B-44	B-54	B-64
			2.70				3.23	9060	R3	45	B-46	B-56	B-66
			4.50				5.16	9070	R3	45	B-46	B-56	B-66
30.0	9550	975	0.89	36.0	7960	813	1.06	9035	R3	50	B-44	B-54	B-64
			1.63				1.96	9050	R3	50	B-44	B-54	B-64
			2.16				2.60	9055	R3	50	B-44	B-54	B-64
			2.46				2.80	9060	R3	50	B-46	B-56	B-66
			3.60				4.09	9070	R3	50	B-46	B-56	B-66
			4.53				5.16	9075	R3	50	B-46	B-56	B-66
26.8	10700	1090	0.87	32.1	8910	910	1.04	9040	R3	56	B-44	B-54	B-64
			1.33				1.60	9050	R3	56	B-44	B-54	B-64
			1.73				2.06	9055	R3	56	B-44	B-54	B-64
			2.13				2.56	9060	R3	56	B-46	B-56	B-66
			3.56				4.09	9070	R3	56	B-46	B-56	B-66
			4.53				5.16	9075	R3	56	B-46	B-56	B-66
23.8	12030	1230	0.87	28.6	10030	1020	1.04	9040	R3	63	B-44	B-54	B-64
			1.30				1.56	9050	R3	63	B-44	B-54	B-64
			1.73				2.10	9055	R3	63	B-44	B-54	B-64
			2.00				2.26	9060	R3	63	B-46	B-56	B-66
			2.93				3.33	9070	R3	63	B-46	B-56	B-66
			3.60				4.09	9075	R3	63	B-46	B-56	B-66
21.1	13560	1380	1.06	25.4	11300	1150	1.30	9050	R3	71	B-44	B-54	B-64
			1.40				1.66	9055	R3	71	B-44	B-54	B-64
			1.66				2.00	9060	R3	71	B-46	B-56	B-66
			2.80				3.33	9070	R3	71	B-46	B-56	B-66
			3.60				4.09	9075	R3	71	B-46	B-56	B-66
18.8	15280	1560	0.84	22.5	12730	1300	1.00	9050	R4	80	B-48	B-58	B-68
			1.40				1.70	9055	R3	80	B-44	B-54	B-64
			2.20				2.66	9070	R4	80	B-50	B-60	B-70
			2.93				3.33	9075	R3	80	B-46	B-56	B-66
			3.33				3.76	9080	R4	80	B-50	B-60	B-70
16.7	17190	1760	0.84	20.0	14330	1460	1.00	9050	R4	90	B-48	B-58	B-68
			1.13				1.36	9055	R3	90	B-44	B-54	B-64
			1.23				1.50	9060	R4	90	B-50	B-60	B-70
			2.20				2.66	9070	R4	90	B-50	B-60	B-70
			2.93				3.33	9075	R3	90	B-46	B-56	B-66
			3.33				3.76	9080	R4	90	B-50	B-60	B-70
15.0	19100	1950	0.84	18.0	15920	1630	1.00	9055	R4	100	B-48	B-58	B-68
			1.23				1.50	9060	R4	100	B-50	B-60	B-70
			2.16				2.60	9070	R4	100	B-50	B-60	B-70
			3.30				3.76	9080	R4	100	B-50	B-60	B-70
13.4	21390	2180	0.84	16.1	17830	1820	1.00	9055	R4	112	B-48	B-58	B-68
			1.03				1.26	9060	R4	112	B-50	B-60	B-70
			1.80				2.16	9070	R4	112	B-50	B-60	B-70
			2.20				2.66	9075	R4	112	B-50	B-60	B-70
			2.83				3.40	9080	R4	112	B-50	B-60	B-70
			3.33				3.76	9085	R4	112	B-50	B-60	B-70
12.0	23880	2440	0.84	14.4	19900	2030	1.00	9055	R4	125	B-48	B-58	B-68
			1.06				1.26	9060	R4	125	B-50	B-60	B-70
			1.66				2.00	9070	R4	125	B-50	B-60	B-70
			2.20				2.66	9075	R4	125	B-50	B-60	B-70
			2.50				3.00	9080	R4	125	B-50	B-60	B-70
			3.33				3.76	9085	R4	125	B-50	B-60	B-70

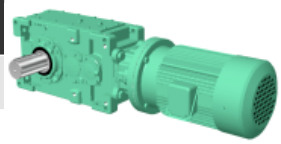

Frequency								Model			Page of Dimension Sheet		
50Hz				60Hz									
Output Speed r/min	Output Torque Tout Nm	Output Torque Tout kgf m	S F	Output Speed r/min	Output Torque Tout Nm	Output Torque Tout kgf m	S F	Size	Assembly	Reduction Ratio	Horizontal	Vertical	Upright
10.7	26740	2730	0.85	12.9	22280	2280	1.00	9060	R4	140	B-50	B-60	B-70
			1.36				1.66	9070	R4	140	B-50	B-60	B-70
			1.93				2.29	9075	R4	140	B-50	B-60	B-70
			2.16				2.60	9080	R4	140	B-50	B-60	B-70
			2.96				3.56	9085	R4	140	B-50	B-60	B-70
9.4	30560	3120	1.10	11.3	25470	2600	1.30	9070	R4	160	B-50	B-60	B-70
			1.76				2.10	9075	R4	160	B-50	B-60	B-70
			1.90				2.26	9080	R4	160	B-50	B-60	B-70
			2.63				3.16	9085	R4	160	B-50	B-60	B-70
8.3	34380	3510	1.10	10.0	28650	2930	1.30	9070	R4	180	B-50	B-60	B-70
			1.46				1.76	9075	R4	180	B-50	B-60	B-70
			1.73				2.06	9080	R4	180	B-50	B-60	B-70
			2.26				2.73	9085	R4	180	B-50	B-60	B-70
7.5	38200	3900	1.10	9.0	31830	3250	1.30	9070	R4	200	B-50	B-60	B-70
			1.63				1.96	9080	R4	200	B-50	B-60	B-70
			1.90				2.26	9085	R4	200	B-50	B-60	B-70
6.7	42780	4370	0.93	8.0	35650	3640	1.10	9070	R4	224	B-50	B-60	B-70
			1.10				1.30	9075	R4	224	B-50	B-60	B-70
			1.43				1.70	9080	R4	224	B-50	B-60	B-70
			1.80				2.16	9085	R4	224	B-50	B-60	B-70
6.0	47750	4880	0.86	7.2	39790	4060	1.00	9070	R4	250	B-50	B-60	B-70
			1.10				1.30	9075	R4	250	B-50	B-60	B-70
			1.26				1.50	9080	R4	250	B-50	B-60	B-70
			1.73				2.06	9085	R4	250	B-50	B-60	B-70
5.4	53480	5460	0.99	6.4	44570	4550	1.16	9075	R4	280	B-50	B-60	B-70
			1.06				1.30	9080	R4	280	B-50	B-60	B-70
			1.50				1.80	9085	R4	280	B-50	B-60	B-70
4.8	60170	6140	0.90	5.7	50140	5120	1.06	9075	R4	315	B-50	B-60	B-70
			0.96				1.13	9080	R4	315	B-50	B-60	B-70
			1.33				1.60	9085	R4	315	B-50	B-60	B-70
4.2	67810	6920	0.86	5.1	56500	5770	1.03	9080	R4	355	B-50	B-60	B-70
			1.13				1.36	9085	R4	355	B-50	B-60	B-70
3.8	76400	7800	1.00	4.5	63670	6500	1.20	9085	R4	400	B-50	B-60	B-70
3.3	85950	8780	0.90	4.0	71630	7310	1.06	9085	R4	450	B-50	B-60	B-70

MOTOR	37 kW
	4P

* marked model upright type need additional cooling system for continuous operation.

Frequency								Model			Page of Dimension Sheet		
50Hz				60Hz									
Output Speed r/min	Output Torque Tout Nm	Output Torque Tout kgf m	S F	Output Speed r/min	Output Torque Tout Nm	Output Torque Tout kgf m	S F	Size	Assembly	Reduction Ratio	Horizontal	Vertical	Upright
238	1480	152	2.78	286	1240	126	3.24	*9030	R2	6.3	B-42	B-52	B-62
			3.72				3.72	9040	R2	6.3	B-42	B-52	B-62
211	1670	171	2.78	254	1390	142	3.24	*9030	R2	7.1	B-42	B-52	B-62
			3.72				3.72	9040	R2	7.1	B-42	B-52	B-62
188	1880	192	2.64	225	1570	160	3.05	*9030	R2	8	B-42	B-52	B-62
			2.78				3.24	9035	R2	8	B-42	B-52	B-62
			3.35				3.72	9040	R2	8	B-42	B-52	B-62
167	2120	216	2.64	200	1770	180	3.05	*9030	R2	9	B-42	B-52	B-62
			2.78				3.24	9035	R2	9	B-42	B-52	B-62
			3.35				3.72	9040	R2	9	B-42	B-52	B-62
150	2360	241	2.37	180	1960	200	2.70	*9030	R2	10	B-42	B-52	B-62
			2.64				3.05	9035	R2	10	B-42	B-52	B-62
			3.05				3.45	9040	R2	10	B-42	B-52	B-62
134	2640	269	2.24	161	2200	224	2.70	*9030	R2	11.2	B-42	B-52	B-62
			2.64				3.05	9035	R2	11.2	B-42	B-52	B-62
			3.05				3.45	9040	R2	11.2	B-42	B-52	B-62
120	2940	301	1.64	144	2450	251	1.97	*9030	R2	12.5	B-42	B-52	B-62
			2.18				2.62	9040	R2	12.5	B-42	B-52	B-62
			2.37				2.70	9035	R2	12.5	B-42	B-52	B-62
107	3300	337	1.64	129	2750	281	1.97	*9030	R2	14	B-42	B-52	B-62
			2.37				2.70	9035	R2	14	B-42	B-52	B-62
93.8	3770	385	1.64	113	3140	321	1.97	9035	R2	16	B-42	B-52	B-62
			1.70				2.02	9040	R2	16	B-42	B-52	B-62
83.3	4240	433	1.64	100	3530	361	1.97	9035	R2	18	B-42	B-52	B-62
			1.70				2.02	9040	R2	18	B-42	B-52	B-62
75.0	4710	481	1.16	90.0	3930	401	1.37	*9035	R2	20	B-42	B-52	B-62
			1.81				2.10	9040	R3	20	B-44	B-54	B-64
			2.56				2.91	9050	R3	20	B-44	B-54	B-64
			2.94				3.32	9060	R3	20	B-46	B-56	B-66
			4.51				5.13	9070	R3	20	B-46	B-56	B-66
67.0	5280	539	1.16	80.4	4400	449	1.37	*9035	R2	22.4	B-42	B-52	B-62
			1.81				2.10	9040	R3	22.4	B-44	B-54	B-64
			2.56				2.91	9050	R3	22.4	B-44	B-54	B-64
			2.94				3.32	9060	R3	22.4	B-46	B-56	B-66
			4.51				5.13	9070	R3	22.4	B-46	B-56	B-66
60.0	5890	601	1.45	72.0	4910	501	1.72	9035	R3	25	B-44	B-54	B-64
			1.81				2.10	9040	R3	25	B-44	B-54	B-64
			2.56				2.91	9050	R3	25	B-44	B-54	B-64
			2.94				3.32	9060	R3	25	B-46	B-56	B-66
			4.51				5.13	9070	R3	25	B-46	B-56	B-66
53.6	6600	673	1.48	64.3	5500	561	1.75	9040	R3	28	B-44	B-54	B-64
			2.16				2.59	9050	R3	28	B-44	B-54	B-64
			2.56				2.91	9055	R3	28	B-44	B-54	B-64
			2.94				3.32	9060	R3	28	B-46	B-56	B-66
			4.51				5.13	9070	R3	28	B-46	B-56	B-66
47.6	7420	758	1.30	57.1	6180	631	1.54	9040	R3	31.5	B-44	B-54	B-64
			2.13				2.45	9050	R3	31.5	B-44	B-54	B-64
			2.56				2.91	9055	R3	31.5	B-44	B-54	B-64
			3.67				4.18	9070	R3	31.5	B-46	B-56	B-66
			4.51				5.13	9075	R3	31.5	B-46	B-56	B-66
42.3	8360	854	1.13	50.7	6970	711	1.37	9040	R3	35.5	B-44	B-54	B-64
			1.75				2.10	9050	R3	35.5	B-44	B-54	B-64
			2.27				2.70	9055	R3	35.5	B-44	B-54	B-64
			2.51				2.83	9060	R3	35.5	B-46	B-56	B-66
			3.67				4.18	9070	R3	35.5	B-46	B-56	B-66
			4.51				5.13	9075	R3	35.5	B-46	B-56	B-66

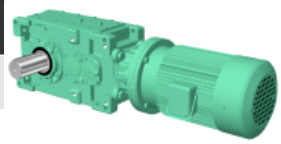

Frequency								Model			Page of Dimension Sheet		
50Hz				60Hz									
Output Speed r/min	Output Torque Tout Nm	Output Torque Tout kgf m	S F	Output Speed r/min	Output Torque Tout Nm	Output Torque Tout kgf m	S F	Size	Assembly	Reduction Ratio	Horizontal	Vertical	Upright
37.5	9420	962	1.10	45.0	7850	802	1.35	9040	R3	40	B-44	B-54	B-64
			1.64				1.97	9050	R3	40	B-44	B-54	B-64
			2.13				2.45	9055	R3	40	B-44	B-54	B-64
			2.51				2.83	9060	R3	40	B-46	B-56	B-66
			3.67				4.18	9070	R3	40	B-46	B-56	B-66
33.3	10600	1080	0.92	40.0	8830	902	1.11	9040	R3	45	B-44	B-54	B-64
			1.35				1.62	9050	R3	45	B-44	B-54	B-64
			1.83				2.21	9055	R3	45	B-44	B-54	B-64
			2.18				2.62	9060	R3	45	B-46	B-56	B-66
			3.64				4.18	9070	R3	45	B-46	B-56	B-66
30.0	11780	1200	1.32	36.0	9820	1000	1.59	9050	R3	50	B-44	B-54	B-64
			1.75				2.10	9055	R3	50	B-44	B-54	B-64
			2.00				2.27	9060	R3	50	B-46	B-56	B-66
			2.91				3.32	9070	R3	50	B-46	B-56	B-66
			3.67				4.18	9075	R3	50	B-46	B-56	B-66
26.8	13190	1350	1.08	32.1	10990	1120	1.29	9050	R3	56	B-44	B-54	B-64
			1.40				1.67	9055	R3	56	B-44	B-54	B-64
			1.72				2.08	9060	R3	56	B-46	B-56	B-66
			2.89				3.32	9070	R3	56	B-46	B-56	B-66
			3.67				4.18	9075	R3	56	B-46	B-56	B-66
23.8	14840	1520	1.05	28.6	12370	1260	1.27	9050	R3	63	B-44	B-54	B-64
			1.40				1.70	9055	R3	63	B-44	B-54	B-64
			1.62				1.83	9060	R3	63	B-46	B-56	B-66
			2.37				2.70	9070	R3	63	B-46	B-56	B-66
			2.91				3.32	9075	R3	63	B-46	B-56	B-66
21.1	16730	1710	0.86	25.4	13940	1420	1.05	9050	R3	71	B-44	B-54	B-64
			1.13				1.35	9055	R3	71	B-44	B-54	B-64
			1.35				1.62	9060	R3	71	B-46	B-56	B-66
			2.27				2.70	9070	R3	71	B-46	B-56	B-66
			2.91				3.32	9075	R3	71	B-46	B-56	B-66
18.8	18850	1920	1.13	22.5	15700	1600	1.37	9055	R3	80	B-44	B-54	B-64
			1.78				2.16	9070	R4	80	B-50	B-60	B-70
			2.37				2.70	9075	R3	80	B-46	B-56	B-66
			2.70				3.05	9080	R4	80	B-50	B-60	B-70
16.7	21200	2160	0.91	20.0	17670	1800	1.10	9055	R3	90	B-44	B-54	B-64
			1.00				1.21	9060	R4	90	B-50	B-60	B-70
			1.78				2.16	9070	R4	90	B-50	B-60	B-70
			2.37				2.70	9075	R3	90	B-46	B-56	B-66
			2.70				3.05	9080	R4	90	B-50	B-60	B-70
15.0	23560	2410	1.00	18.0	19630	2000	1.21	9060	R4	100	B-50	B-60	B-70
			1.75				2.10	9070	R4	100	B-50	B-60	B-70
			2.67				3.05	9080	R4	100	B-50	B-60	B-70
13.4	26380	2690	0.83	16.1	21990	2240	1.02	9060	R4	112	B-50	B-60	B-70
			1.45				1.75	9070	R4	112	B-50	B-60	B-70
			1.78				2.16	9075	R4	112	B-50	B-60	B-70
			2.29				2.75	9080	R4	112	B-50	B-60	B-70
			2.70				3.05	9085	R4	112	B-50	B-60	B-70
12.0	29450	3010	0.86	14.4	24540	2510	1.02	9060	R4	125	B-50	B-60	B-70
			1.35				1.62	9070	R4	125	B-50	B-60	B-70
			1.78				2.16	9075	R4	125	B-50	B-60	B-70
			2.02				2.43	9080	R4	125	B-50	B-60	B-70
			2.70				3.05	9085	R4	125	B-50	B-60	B-70
10.7	32980	3370	1.10	12.9	27480	2810	1.35	9070	R4	140	B-50	B-60	B-70
			1.56				1.86	9075	R4	140	B-50	B-60	B-70
			1.75				2.10	9080	R4	140	B-50	B-60	B-70
			2.40				2.89	9085	R4	140	B-50	B-60	B-70
9.4	37690	3850	0.89	11.3	31410	3210	1.05	9070	R4	160	B-50	B-60	B-70
			1.43				1.70	9075	R4	160	B-50	B-60	B-70
			1.54				1.83	9080	R4	160	B-50	B-60	B-70
			2.13				2.56	9085	R4	160	B-50	B-60	B-70

Frequency 50Hz Output Speed r/min	Output Torque Tout Nm	Output Torque Tout kgf m	S F	Frequency 60Hz Output Speed r/min	Output Torque Tout Nm	Output Torque Tout kgf m	S F	Model Size	Assembly	Reduction Ratio	Page of Dimension Sheet Horizontal	Vertical	Upright
8.3	42400	4330	0.89	10.0	35340	3610	1.05	9070	R4	180	B-50	B-60	B-70
			1.18				1.43	9075	R4	180	B-50	B-60	B-70
			1.40				1.67	9080	R4	180	B-50	B-60	B-70
			1.83				2.21	9085	R4	180	B-50	B-60	B-70
7.5	47110	4810	0.89	9.0	39260	4010	1.05	9070	R4	200	B-50	B-60	B-70
			1.32				1.59	9080	R4	200	B-50	B-60	B-70
			1.54				1.83	9085	R4	200	B-50	B-60	B-70
6.7	52770	5390	0.89	8.0	43970	4490	1.05	9075	R4	224	B-50	B-60	B-70
			1.16				1.37	9080	R4	224	B-50	B-60	B-70
			1.45				1.75	9085	R4	224	B-50	B-60	B-70
6.0	58890	6010	0.89	7.2	49080	5010	1.05	9075	R4	250	B-50	B-60	B-70
			1.02				1.21	9080	R4	250	B-50	B-60	B-70
			1.40				1.67	9085	R4	250	B-50	B-60	B-70
5.4	65960	6730	0.86	6.4	54970	5610	1.05	9080	R4	280	B-50	B-60	B-70
			1.21				1.45	9085	R4	280	B-50	B-60	B-70
4.8	74200	7580	1.08	5.7	61840	6310	1.29	9085	R4	315	B-50	B-60	B-70
4.2	83630	8540	0.91	5.1	69690	7110	1.10	9085	R4	355	B-50	B-60	B-70

MOTOR	45 kW
	4P

* marked model upright type need additional cooling systme for continuous operation.

Frequency 50Hz Output Speed r/min	Output Torque Tout Nm	Output Torque Tout kgf m	S F	Frequency 60Hz Output Speed r/min	Output Torque Tout Nm	Output Torque Tout kgf m	S F	Model Size	Assembly	Reduction Ratio	Page of Dimension Sheet Horizontal	Vertical	Upright
238	1800	184	2.28	286	1500	154	2.66	*9030	R2	6.3	B-42	B-52	B-62
			3.06				3.06	9040	R2	6.3	B-42	B-52	B-62
211	2030	208	3.06	254	1700	173	3.06	9040	R2	7.1	B-42	B-52	B-62
188	2290	234	2.28	225	1910	195	2.66	9035	R2	8	B-42	B-52	B-62
			2.75				3.06	9040	R2	8	B-42	B-52	B-62
167	2580	263	2.28	200	2150	219	2.66	*9035	R2	9	B-42	B-52	B-62
			2.75				3.06	9040	R2	9	B-42	B-52	B-62
150	2870	293	2.17	180	2390	244	2.51	*9035	R2	10	B-42	B-52	B-62
			2.51				2.84	9040	R2	10	B-42	B-52	B-62
134	3210	328	2.17	161	2670	273	2.51	*9035	R2	11.2	B-42	B-52	B-62
			2.51				2.84	9040	R2	11.2	B-42	B-52	B-62
120	3580	366	1.95	144	2980	305	2.22	*9035	R2	12.5	B-42	B-52	B-62
107	4010	410	1.95	129	3340	341	2.22	*9035	R2	14	B-42	B-52	B-62
93.8	4580	468	1.35	113	3820	390	1.62	*9035	R2	16	B-42	B-52	B-62
			1.40				1.66	*9040	R2	16	B-42	B-52	B-62
83.3	5160	527	1.35	100	4300	439	1.62	*9035	R2	18	B-42	B-52	B-62
			1.40				1.66	*9040	R2	18	B-42	B-52	B-62
75.0	5730	585	1.48	90.0	4780	488	1.73	9040	R3	20	B-44	B-54	B-64
			2.11				2.40	9050	R3	20	B-44	B-54	B-64
			2.42				2.73	9060	R3	20	B-46	B-56	B-66
			3.71				4.22	9070	R3	20	B-46	B-56	B-66
67.0	6420	655	1.48	80.4	5350	546	1.73	9040	R3	22.4	B-44	B-54	B-64
			2.11				2.40	9050	R3	22.4	B-44	B-54	B-64
			2.42				2.73	9060	R3	22.4	B-46	B-56	B-66
			3.71				4.22	9070	R3	22.4	B-46	B-56	B-66
60.0	7160	731	1.49	72.0	5970	609	1.73	9040	R3	25	B-44	B-54	B-64
			2.11				2.40	9050	R3	25	B-44	B-54	B-64
			2.42				2.73	9060	R3	25	B-46	B-56	B-66
			3.71				4.22	9070	R3	25	B-46	B-56	B-66
53.6	8020	819	1.22	64.3	6690	683	1.44	9040	R3	28	B-44	B-54	B-64
			1.77				2.13	9050	R3	28	B-44	B-54	B-64
			2.11				2.40	9055	R3	28	B-44	B-54	B-64
			2.42				2.73	9060	R3	28	B-46	B-56	B-66
			3.71				4.22	9070	R3	28	B-46	B-56	B-66

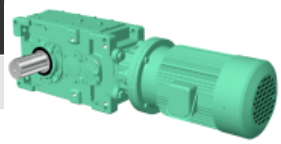

Frequency								Model			Page of Dimension Sheet		
50Hz				60Hz									
Output Speed r/min	Output Torque Tout Nm	Output Torque Tout kgf m	S F	Output Speed r/min	Output Torque Tout Nm	Output Torque Tout kgf m	S F	Size	Assembly	Reduction Ratio	Horizontal	Vertical	Upright
47.6	9020	921	1.75	57.1	7520	768	2.02	9050	R3	31.5	B-44	B-54	B-64
			2.11				2.40	9055	R3	31.5	B-44	B-54	B-64
			3.02				3.44	9070	R3	31.5	B-46	B-56	B-66
			3.71				4.22	9075	R3	31.5	B-46	B-56	B-66
42.3	10170	1040	1.44	50.7	8480	865	1.73	9050	R3	35.5	B-44	B-54	B-64
			1.86				2.22	9055	R3	35.5	B-44	B-54	B-64
			2.06				2.33	9060	R3	35.5	B-46	B-56	B-66
			3.02				3.44	9070	R3	35.5	B-46	B-56	B-66
			3.71				4.22	9075	R3	35.5	B-46	B-56	B-66
37.5	11460	1170	1.35	45.0	9550	975	1.62	9050	R3	40	B-44	B-54	B-64
			1.75				2.02	9055	R3	40	B-44	B-54	B-64
			2.06				2.33	9060	R3	40	B-46	B-56	B-66
			3.02				3.44	9070	R3	40	B-46	B-56	B-66
33.3	12890	1320	1.11	40.0	10740	1100	1.33	9050	R3	45	B-44	B-54	B-64
			1.51				1.82	9055	R3	45	B-44	B-54	B-64
			1.80				2.15	9060	R3	45	B-46	B-56	B-66
			3.00				3.44	9070	R3	45	B-46	B-56	B-66
30.0	14330	1460	1.08	36.0	11940	1220	1.31	9050	R3	50	B-44	B-54	B-64
			1.44				1.73	9055	R3	50	B-44	B-54	B-64
			1.64				1.86	9060	R3	50	B-46	B-56	B-66
			2.40				2.73	9070	R3	50	B-46	B-56	B-66
			3.02				3.44	9075	R3	50	B-46	B-56	B-66
26.8	16040	1640	0.88	32.1	13370	1370	1.06	9050	R3	56	B-44	B-54	B-64
			1.15				1.37	9055	R3	56	B-44	B-54	B-64
			1.42				1.71	9060	R3	56	B-46	B-56	B-66
			2.37				2.73	9070	R3	56	B-46	B-56	B-66
			3.02				3.44	9075	R3	56	B-46	B-56	B-66
23.8	18050	1840	1.15	28.6	15040	1540	1.40	9055	R3	63	B-44	B-54	B-64
			1.33				1.51	9060	R3	63	B-46	B-56	B-66
			1.95				2.22	9070	R3	63	B-46	B-56	B-66
			2.40				2.73	9075	R3	63	B-46	B-56	B-66
21.1	20340	2080	0.93	25.4	16950	1730	1.11	9055	R3	71	B-44	B-54	B-64
			1.11				1.33	9060	R3	71	B-46	B-56	B-66
			1.86				2.22	9070	R3	71	B-46	B-56	B-66
			2.40				2.73	9075	R3	71	B-46	B-56	B-66
18.8	22920	2340	0.93	22.5	19100	1950	1.13	9055	R3	80	B-44	B-54	B-64
			1.46				1.77	9070	R4	80	B-50	B-60	B-70
			1.95				2.22	9075	R3	80	B-46	B-56	B-66
			2.22				2.51	9080	R4	80	B-50	B-60	B-70
16.7	25790	2630	0.82	20.0	21490	2190	1.00	9060	R4	90	B-50	B-60	B-70
			1.46				1.77	9070	R4	90	B-50	B-60	B-70
			1.95				2.22	9075	R3	90	B-46	B-56	B-66
			2.22				2.51	9080	R4	90	B-50	B-60	B-70
15.0	28650	2930	0.82	18.0	23880	2440	1.00	9060	R4	100	B-50	B-60	B-70
			1.44				1.73	9070	R4	100	B-50	B-60	B-70
			2.20				2.51	9080	R4	100	B-50	B-60	B-70
13.4	32090	3280	1.20	16.1	26740	2730	1.44	9070	R4	112	B-50	B-60	B-70
			1.46				1.77	9075	R4	112	B-50	B-60	B-70
			1.88				2.26	9080	R4	112	B-50	B-60	B-70
			2.22				2.51	9085	R4	112	B-50	B-60	B-70
12.0	35810	3660	1.11	14.4	29840	3050	1.33	9070	R4	125	B-50	B-60	B-70
			1.46				1.77	9075	R4	125	B-50	B-60	B-70
			1.66				2.00	9080	R4	125	B-50	B-60	B-70
			2.22				2.51	9085	R4	125	B-50	B-60	B-70
10.7	40110	4100	0.91	12.9	33430	3410	1.11	9070	R4	140	B-50	B-60	B-70
			1.28				1.53	9075	R4	140	B-50	B-60	B-70
			1.44				1.73	9080	R4	140	B-50	B-60	B-70
			1.97				2.37	9085	R4	140	B-50	B-60	B-70
9.4	45840	4680	1.17	11.3	38200	3900	1.40	9075	R4	160	B-50	B-60	B-70
			1.26				1.51	9080	R4	160	B-50	B-60	B-70
			1.75				2.11	9085	R4	160	B-50	B-60	B-70

Frequency								Model			Page of Dimension Sheet		
50Hz				60Hz									
Output Speed r/min	Output Torque Tout Nm	Output Torque Tout kgf m	S F	Output Speed r/min	Output Torque Tout Nm	Output Torque Tout kgf m	S F	Size	Assembly	Reduction Ratio	Horizontal	Vertical	Upright
8.3	51570	5270	0.97	10.0	42980	4390	1.17	9075	R4	180	B-50	B-60	B-70
			1.15				1.37	9080	R4	180	B-50	B-60	B-70
			1.51				1.82	9085	R4	180	B-50	B-60	B-70
7.5	57300	5850	1.08	9.0	47750	4880	1.31	9080	R4	200	B-50	B-60	B-70
			1.26				1.51	9085	R4	200	B-50	B-60	B-70
6.7	64180	6550	0.95	8.0	53480	5460	1.13	9080	R4	224	B-50	B-60	B-70
			1.20				1.44	9085	R4	224	B-50	B-60	B-70
6.0	71630	7310	0.84	7.2	59690	6090	1.00	9080	R4	250	B-50	B-60	B-70
			1.15				1.37	9085	R4	250	B-50	B-60	B-70
5.4	80220	8190	1.00	6.4	66850	6830	1.20	9085	R4	280	B-50	B-60	B-70
4.8	90250	9210	0.88	5.7	75210	7680	1.06	9085	R4	315	B-50	B-60	B-70

MOTOR	55 kW
	4P

Frequency								Model			Page of Dimension Sheet		
50Hz				60Hz									
Output Speed r/min	Output Torque Tout Nm	Output Torque Tout kgf m	S F	Output Speed r/min	Output Torque Tout Nm	Output Torque Tout kgf m	S F	Size	Assembly	Reduction Ratio	Horizontal	Vertical	Upright
238	2210	225	2.50	286	1840	188	2.50	9040	R2	6.3	B-42	B-52	B-62
211	2490	254	2.50	254	2070	212	2.50	*9040	R2	7.1	B-42	B-52	B-62
188	2800	286	1.87	225	2330	238	2.18	*9035	R2	8	B-42	B-52	B-62
			2.25				2.50	*9040	R2	8	B-42	B-52	B-62
167	3150	322	2.25	200	2630	268	2.50	*9040	R2	9	B-42	B-52	B-62
150	3500	358	2.05	180	2920	298	2.32	*9040	R2	10	B-42	B-52	B-62
134	3920	400	2.05	161	3270	334	2.32	*9040	R2	11.2	B-42	B-52	B-62
120	4380	447	1.47	144	3650	372	1.76	*9040	R2	12.5	B-42	B-52	B-62
107	4900	501	1.47	129	4090	417	1.76	*9040	R2	14	B-42	B-52	B-62
93.8	5600	572	1.14	113	4670	477	1.36	*9040	R2	16	B-42	B-52	B-62
75.0	7000	715	1.72	90.0	5840	596	1.96	9050	R3	20	B-44	B-54	B-64
			1.98				2.23	9060	R3	20	B-46	B-56	B-66
			3.03				3.45	9070	R3	20	B-46	B-56	B-66
67.0	7840	801	1.72	80.4	6540	667	1.96	9050	R3	22.4	B-44	B-54	B-64
			1.98				2.23	9060	R3	22.4	B-46	B-56	B-66
			3.03				3.45	9070	R3	22.4	B-46	B-56	B-66
60.0	8750	894	1.72	72.0	7300	745	1.96	9055	R3	25	B-44	B-54	B-64
			1.98				2.23	9060	R3	25	B-46	B-56	B-66
			3.03				3.45	9070	R3	25	B-46	B-56	B-66
53.6	9800	1000	1.72	64.3	8170	834	1.96	9055	R3	28	B-44	B-54	B-64
			1.98				2.23	9060	R3	28	B-46	B-56	B-66
			3.03				3.45	9070	R3	28	B-46	B-56	B-66
47.6	11030	1130	1.72	57.1	9190	938	1.96	9055	R3	31.5	B-44	B-54	B-64
			2.47				2.81	9070	R3	31.5	B-46	B-56	B-66
			3.03				3.45	9075	R3	31.5	B-46	B-56	B-66
42.3	12430	1270	1.52	50.7	10360	1060	1.81	9055	R3	35.5	B-44	B-54	B-64
			1.69				1.90	9060	R3	35.5	B-46	B-56	B-66
			2.47				2.81	9070	R3	35.5	B-46	B-56	B-66
			3.03				3.45	9075	R3	35.5	B-46	B-56	B-66
37.5	14010	1430	1.43	45.0	11670	1190	1.65	9055	R3	40	B-44	B-54	B-64
			1.69				1.90	9060	R3	40	B-46	B-56	B-66
			2.47				2.81	9070	R3	40	B-46	B-56	B-66
33.3	15760	1610	1.23	40.0	13130	1340	1.49	9055	R3	45	B-44	B-54	B-64
			1.47				1.76	9060	R3	45	B-46	B-56	B-66
			2.45				2.81	9070	R3	45	B-46	B-56	B-66
30.0	17510	1790	1.18	36.0	14590	1490	1.41	9055	R3	50	B-44	B-54	B-64
			1.34				1.52	9060	R3	50	B-46	B-56	B-66
			1.96				2.23	9070	R3	50	B-46	B-56	B-66
			2.47				2.81	9075	R3	50	B-46	B-56	B-66

55kW

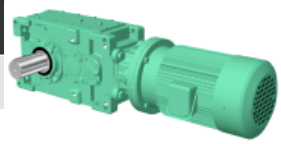

Frequency								Model			Page of Dimension Sheet		
50Hz				60Hz									
Output Speed r/min	Output Torque Tout Nm	Output Torque Tout kgf m	S F	Output Speed r/min	Output Torque Tout Nm	Output Torque Tout kgf m	S F	Size	Assembly	Reduction Ratio	Horizontal	Vertical	Upright
26.8	19610	2000	0.94	32.1	16340	1670	1.12	9055	R3	56	B-44	B-54	B-64
			1.16				1.40	9060	R3	56	B-46	B-56	B-66
			1.94				2.23	9070	R3	56	B-46	B-56	B-66
			2.47				2.81	9075	R3	56	B-46	B-56	B-66
23.8	22060	2250	0.94	28.6	18380	1880	1.14	9055	R3	63	B-44	B-54	B-64
			1.09				1.23	9060	R3	63	B-46	B-56	B-66
			1.60				1.81	9070	R3	63	B-46	B-56	B-66
			1.96				2.23	9075	R3	63	B-46	B-56	B-66
21.1	24860	2540	0.90	25.4	20720	2120	1.09	9060	R3	71	B-46	B-56	B-66
			1.52				1.81	9070	R3	71	B-46	B-56	B-66
			1.96				2.23	9075	R3	71	B-46	B-56	B-66
18.8	28010	2860	1.20	22.5	23340	2380	1.45	9070	R4	80	B-50	B-60	B-70
			1.60				1.81	9075	R3	80	B-46	B-56	B-66
			1.81				2.05	9080	R4	80	B-50	B-60	B-70
16.7	31520	3220	1.20	20.0	26260	2680	1.45	9070	R4	90	B-50	B-60	B-70
			1.60				1.81	9075	R3	90	B-46	B-56	B-66
			1.81				2.05	9080	R4	90	B-50	B-60	B-70
15.0	35020	3580	1.18	18.0	29180	2980	1.41	9070	R4	100	B-50	B-60	B-70
			1.80				2.05	9080	R4	100	B-50	B-60	B-70
13.4	39220	4000	0.98	16.1	32680	3340	1.18	9070	R4	112	B-50	B-60	B-70
			1.20				1.45	9075	R4	112	B-50	B-60	B-70
			1.54				1.85	9080	R4	112	B-50	B-60	B-70
			1.81				2.05	9085	R4	112	B-50	B-60	B-70
12.0	43770	4470	0.90	14.4	36480	3720	1.09	9070	R4	125	B-50	B-60	B-70
			1.20				1.45	9075	R4	125	B-50	B-60	B-70
			1.36				1.63	9080	R4	125	B-50	B-60	B-70
			1.81				2.05	9085	R4	125	B-50	B-60	B-70
10.7	49020	5010	1.05	12.9	40850	4170	1.25	9075	R4	140	B-50	B-60	B-70
			1.18				1.41	9080	R4	140	B-50	B-60	B-70
			1.61				1.94	9085	R4	140	B-50	B-60	B-70
9.4	56030	5720	0.96	11.3	46690	4770	1.14	9075	R4	160	B-50	B-60	B-70
			1.03				1.23	9080	R4	160	B-50	B-60	B-70
			1.43				1.72	9085	R4	160	B-50	B-60	B-70
8.3	63030	6440	0.94	10.0	52530	5360	1.12	9080	R4	180	B-50	B-60	B-70
			1.23				1.49	9085	R4	180	B-50	B-60	B-70
7.5	70030	7150	0.89	9.0	58360	5960	1.07	9080	R4	200	B-50	B-60	B-70
			1.03				1.23	9085	R4	200	B-50	B-60	B-70
6.7	78440	8010	0.98	8.0	65360	6670	1.18	9085	R4	224	B-50	B-60	B-70
6.0	87540	8940	0.94	7.2	72950	7450	1.12	9085	R4	250	B-50	B-60	B-70

Allowable Radial Load

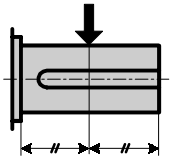

Sheet1

Aplicable to configurations : Double Redcution RR,LL/

	L.Speed Shaft Speed r/min	Size of Reducer															
		9015	9025	9030	9035	9045	9050	9055	9060	9070	9075	9080	9085	9090	9095	9100	9105
Standard bearing model	250	12.8	22.1	17.7	29.4	38.7	37.8	46.6	39.7	44.1	109.9	76.5	112.8	100.1	137.8	139.8	192.3
	160	14.7	24.0	20.1	31.4	41.2	39.7	48.1	41.7	46.1	110.4	85.8	113.3	108.9	145.7	157.5	200.6
	100	16.2	23.5	25.0	37.8	49.1	47.1	53.5	47.6	54.4	119.2	99.1	127.0	122.1	147.6	166.3	183.9
	63	16.2	23.1	29.9	42.2	58.4	55.9	62.3	58.9	65.2	146.7	125.6	156.0	125.6	143.7	165.3	178.1
	40	16.2	23.1	35.3	42.2	66.7	67.2	75.0	71.1	79.0	178.1	161.9	197.2	125.1	137.8	164.8	173.6
	<=25	15.7	23.1	42.2	41.2	80.4	79.0	90.3	86.8	99.1	218.8	208.0	236.9	122.6	135.4	163.3	167.3
Heavy duty bearing model	250								71.1	70.1	155.5	122.6	158.9	141.8	158.9	181.0	213.9
	160								78.0	77.5	158.9	137.3	162.4	132.4	151.6	174.6	200.6
	100								81.4	92.2	171.7	149.6	178.5	127.0	147.6	166.8	183.9
	63								81.4	114.8	206.5	149.1	214.8	125.6	143.7	165.8	178.1
	40								81.4	117.7	231.5	148.6	236.9	125.1	137.8	165.3	173.6
	<=25								81.4	117.7	231.5	147.2	236.9	122.6	135.4	163.8	167.3

Sheet2

Applicable to configurations : Double Reduction RL,LR/

	L.Speed Shaft Speed r/min	Size of Reducer															
		9015	9025	9030	9035	9045	9050	9055	9060	9070	9075	9080	9085	9090	9095	9100	9105
Standard bearing model	250	8.3	15.2	9.8	21.6	28.4	22.6	31.4	16.7	17.2	86.8	43.7	80.4	58.4	97.6	80.4	131.5
	160	9.8	18.6	12.3	23.1	29.4	24.0	31.4	18.1	17.7	85.3	52.5	79.5	64.3	103.0	96.1	138.3
	100	13.7	23.5	16.7	29.4	37.3	28.4	35.3	22.1	25.5	92.2	62.8	92.2	74.6	110.9	105.9	146.7
	63	16.7	28.4	21.6	36.3	47.1	37.3	42.7	33.4	33.8	117.2	89.3	118.2	104.5	148.1	153.5	200.1
	40	21.1	35.3	27.0	43.7	54.4	48.6	55.4	45.1	47.6	149.1	125.6	158.9	146.7	172.2	203.6	235.4
	<=25	24.5	36.3	34.3	50.5	68.7	61.8	70.1	60.8	67.7	171.9	171.2	211.4	171.2	171.2	215.3	304.1
Heavy duty bearing model	250								46.1	40.2	133.9	89.8	127.5	114.8	156.0	150.6	213.4
	160								52.0	45.6	135.4	103.5	128.0	125.1	164.8	170.7	223.2
	100								60.3	59.4	145.7	115.8	143.7	140.8	176.1	187.4	236.9
	63								81.4	80.0	171.9	152.5	176.6	174.1	186.9	218.8	301.7
	40								81.4	108.9	171.9	191.8	224.6	191.8	193.7	241.8	304.1
	<=25								81.4	117.7	171.9	180.5	230.3	171.2	171.2	214.8	304.1

Allowable Axial Load

	L.Speed Shaft Speed r/min	Size of Reducer															
		9015	9025	9030	9035	9045	9050	9055	9060	9070	9075	9080	9085	9090	9095	9100	9105
Standard bearing model	250	9.3	11.4	14.7	23.1	35.3	32.9	31.9	27.0	28.0	45.6	23.5	42.7	31.4	52.0	45.1	50.0
	160	9.3	11.4	18.1	23.1	35.3	33.4	31.9	28.9	28.4	45.1	27.5	42.2	34.3	53.0	53.0	49.5
	100	9.3	11.4	24.5	23.1	35.3	37.3	31.9	34.3	39.7	48.6	32.9	48.6	43.2	59.4	58.4	54.0
	63	9.3	11.4	26.5	23.1	35.3	37.3	31.9	49.1	52.5	61.3	45.6	60.3	54.0	59.8	81.4	74.6
	40	9.3	11.4	26.5	23.1	35.3	37.3	31.9	49.1	61.4	62.8	63.3	60.3	59.8	59.8	83.4	83.4
	<=25	9.3	11.4	26.5	23.1	35.3	37.3	31.9	49.1	61.4	62.8	67.7	60.3	59.8	59.8	83.4	83.4
Heavy duty bearing model	250								23.1	18.6	93.2	56.9	86.8	59.8	59.8	83.4	83.4
	160								25.0	21.1	94.2	56.9	87.8	59.8	59.8	83.4	83.4
	100								29.4	27.5	101.5	56.9	97.6	59.8	59.8	83.4	83.4
	63								39.2	36.3	124.1	56.9	119.2	59.8	59.8	83.4	83.4
	40								39.2	49.1	149.1	56.9	149.6	59.8	59.8	83.4	83.4
	<=25								39.2	56.9	181.0	56.9	187.9	59.8	59.8	83.4	83.4

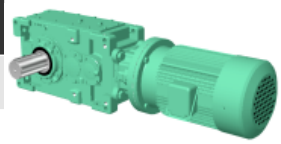

Allowable Radial and Axial Loads on Slow Speed (kN)

Triple Reduction RL,LR / Quadruple Reduction RR,LL

Size of Reducer								L.Speed Shaft Speed r/min	
9110	9115	9118	9121	9126	9128	9131	9136		
167.8	222.7							250	Standard bearing model
174.1	234.9							160	
184.9	245.7	391.9	352.7	330.6	315.4	403.2	391.9	100	
190.8	303.1	387.5	369.3	341.4	328.6	462.5	430.7	63	
194.7	320.8	460.1	449.3	401.2	409.6	572.4	511.1	40	
184.9	316.4	448.3	554.8	497.4	534.6	733.8	638.6	<=25	
250.6	316.9							250	Heavy duty bearing model
214.8	334.5							160	
195.2	340.9							100	
190.8	333.5							63	
194.7	320.8							40	
184.9	316.4							<=25	

Units : kN

Triple Redcution RR,LL / Quadruple Reduction RL,LR

Size of Reducer								L.Speed Shaft Speed r/min	
9110	9115	9118	9121	9126	9128	9131	9136		
94.2	152.5							250	Standard bearing model
92.2	155.0							160	
101.0	167.3	312.0	228.1	197.7	159.4	203.6	190.3	100	
144.7	220.7	292.3	244.3	206.0	170.7	260.9	218.8	63	
199.1	250.2	373.3	322.7	257.0	250.2	369.3	286.5	40	
272.7	353.2	460.1	427.2	348.7	373.3	528.3	398.3	<=25	
191.3	248.7								Heavy duty bearing model
197.7	261.4								
210.4	274.2								
267.8	341.9								
323.7	382.1								
323.7	374.7								

Units : kN

Size of Reducer								L.Speed Shaft Speed r/min	
9110	9115	9118	9121	9126	9128	9131	9136		
50.0	76.5							250	Standard bearing model
49.5	76.5							160	
54.0	83.4	119.7	121.6	116.7	91.2	113.3	107.9	100	
74.6	83.4	119.7	121.6	121.6	96.6	140.3	122.6	63	
83.4	83.4	119.7	121.6	121.6	134.9	191.3	155.5	40	
83.4	83.4	119.7	121.6	121.6	144.2	192.3	192.3	<=25	
83.4	83.4							250	Heavy duty bearing model
83.4	83.4							160	
83.4	83.4							100	
83.4	83.4							63	
83.4	83.4							40	
83.4	83.4							<=25	

Units : kN

Overhang Factor

Overhang Member	Overhang Factor
Sprocket (Single Row)	1
Sprocket (Double Row)	1.25
Gears	1.25
V belt	1.5
Flat Belt	2.5

Notes

1. The value shown in the table is allowable radial load when it is applied to the center of the solid shaft (except hollow shaft). Consult us when a load is not in the center.
2. Consult us for the blanks in the table.
3. Consult us when the radial load is applied upward.
4. In case of double projection shaft (RB, LB, BB)
   (1) See sheet (1) when the radial load is applied only to the shaft 1.
   (2) See sheet (2) when the radial load is applied only to the shaft 2.
   (3) Consult us when the radial load is applied to both shafts.

RB

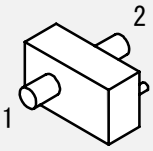

LB

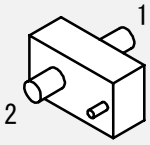

BB

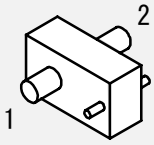

Allowable Radial Load

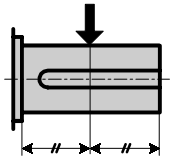

Sheet1

Aplicable to configurations : Double Redcution RR,LL/

	L.Speed Shaft Speed r/min	Size of Reducer															
		9015	9025	9030	9035	9045	9050	9055	9060	9070	9075	9080	9085	9090	9095	9100	9105
Standard bearing model	250	1300	2250	1800	3000	3950	3850	4750	4050	4500	11200	7800	11500	10200	14050	14250	19600
	160	1500	2450	2050	3200	4200	4050	4900	4250	4700	11250	8750	11550	11100	14850	16050	20450
	100	1650	2400	2550	3850	5000	4800	5450	4850	5550	12150	10100	12950	12450	15050	16950	18750
	63	1650	2350	3050	4300	5950	5700	6350	6000	6650	14950	12800	15900	12800	14650	16850	18150
	40	1650	2350	3600	4300	6800	6850	7650	7250	8050	18150	16500	20100	12750	14050	16800	17700
	<=25	1600	2350	4300	4200	8200	8050	9200	8850	10100	22300	21200	24150	12500	13800	16650	17050
Heavy duty bearing model	250								7250	7150	15850	12500	16200	14450	16200	18450	21800
	160								7950	7900	16200	14000	16550	13500	15450	17800	20450
	100								8300	9400	17500	15250	18200	12950	15050	17000	18750
	63								8300	11700	21050	15200	21900	12800	14650	16900	18150
	40								8300	12000	23600	15150	24150	12750	14050	16850	17700
	<=25								8300	12000	23600	15000	24150	12500	13800	16700	17050

Sheet2

Applicable to configurations : Double Reduction RL,LR/

	L.Speed Shaft Speed r/min	Size of Reducer															
		9015	9025	9030	9035	9045	9050	9055	9060	9070	9075	9080	9085	9090	9095	9100	9105
Standard bearing model	250	850	1550	1000	2200	2900	2300	3200	1700	1750	8850	4450	8200	5950	9950	8200	13400
	160	1000	1900	1250	2350	3000	2450	3200	1850	1800	8700	5350	8100	6550	10500	9800	14100
	100	1400	2400	1700	3000	3800	2900	3600	2250	2600	9400	6400	9400	7600	11300	10800	14950
	63	1700	2900	2200	3700	4800	3800	4350	3400	3450	11950	9100	12050	10650	15100	15650	20400
	40	2150	3600	2750	4450	5550	4950	5650	4600	4850	15200	12800	16200	14950	17550	20750	24000
	<=25	2500	3700	3500	5150	7000	6300	7150	6200	6900	17520	17450	21550	17450	17450	21950	31000
Heavy duty bearing model	250								4700	4100	13650	9150	13000	11700	15900	15350	21750
	160								5300	4650	13800	10550	13050	12750	16800	17400	22750
	100								6150	6050	14850	11800	14650	14350	17950	19100	24150
	63								8300	8150	17520	15550	18000	17750	19050	22300	30750
	40								8300	11100	17520	19550	22900	19550	19750	24650	31000
	<=25								8300	12000	17520	18400	23480	17450	17450	21900	31000

Allowable Axial Load

	L.Speed Shaft Speed r/min	Size of Reducer															
		9015	9025	9030	9035	9045	9050	9055	9060	9070	9075	9080	9085	9090	9095	9100	9105
Standard bearing model	250	950	1160	1500	2350	3600	3350	3250	2750	2850	4650	2400	4350	3200	5300	4600	5100
	160	950	1160	1850	2350	3600	3400	3250	2950	2900	4600	2800	4300	3500	5400	5400	5050
	100	950	1160	2500	2350	3600	3800	3250	3500	4050	4950	3350	4950	4400	6050	5950	5500
	63	950	1160	2700	2350	3600	3800	3250	5000	5350	6250	4650	6150	5500	6100	8300	7600
	40	950	1160	2700	2350	3600	3800	3250	5000	6260	6400	6450	6150	6100	6100	8500	8500
	<=25	950	1160	2700	2350	3600	3800	3250	5000	6260	6400	6900	6150	6100	6100	8500	8500
Heavy duty bearing model	250								2350	1900	9500	5800	8850	6100	6100	8500	8500
	160								2550	2150	9600	5800	8950	6100	6100	8500	8500
	100								3000	2800	10350	5800	9950	6100	6100	8500	8500
	63								4000	3700	12650	5800	12150	6100	6100	8500	8500
	40								4000	5000	15200	5800	15250	6100	6100	8500	8500
	<=25								4000	5800	18450	5800	19150	6100	6100	8500	8500

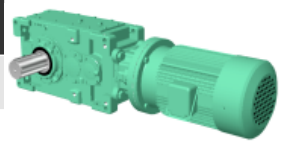

Allowable Radial and Axial Loads on Slow Speed Shaft (kgf)

Triple Reduction RL,LR / Quadruple Reduction RR,LL

Size of Reducer								L.Speed Shaft Speed r/min	
9110	9115	9118	9121	9126	9128	9131	9136		
17100	22700							250	Standard bearing model
17750	23950							160	
18850	25050	39950	35950	33700	32150	41100	39950	100	
19450	30900	39500	37650	34800	33500	47150	43900	63	
19850	32700	46900	45800	40900	41750	58350	52100	40	
18850	32250	45700	56550	50700	54500	74800	65100	<=25	
25550	32300							250	Heavy duty bearing model
21900	34100							160	
19900	34750							100	
19450	34000							63	
19850	32700							40	
18850	32250							<=25	

Units : kgf

Overhang Factor

Overhang Member	Overhang Factor
Sprocket (Single Row)	1
Sprocket (Double Row)	1.25
Gears	1.25
V belt	1.5
Flat Belt	2.5

Triple Redcution RR,LL / Quadruple Reduction RL,LR

Size of Reducer								L.Speed Shaft Speed r/min	
9110	9115	9118	9121	9126	9128	9131	9136		
9600	15550							250	Standard bearing model
9400	15800							160	
10300	17050	31800	23250	20150	16250	20750	19400	100	
14750	22500	29800	24900	21000	17400	26600	22300	63	
20300	25500	38050	32900	26200	25500	37650	29200	40	
27800	36000	46900	43550	35550	38050	53850	40600	<=25	
19500	25350							250	Heavy duty bearing model
20150	26650							160	
21450	27950							100	
27300	34850							63	
33000	38950							40	
33000	38200							<=25	

Units : kgf

Notes

1. The value shown in the table is allowable radial load when it is applied to the center of the solid shaft (except hollow shaft). Consult us when a load is not in the center.
2. Consult us for the blanks in the table.
3. Consult us when the radial load is applied upward.
4. In case of double projection shaft (RB, LB, BB)
   (1) See sheet (1) when the radial load is applied only to the shaft 1.
   (2) See sheet (2) when the radial load is applied only to the shaft 2.
   (3) Consult us when the radial load is applied to both shafts.

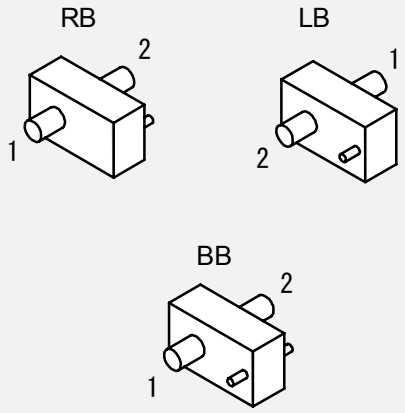

Size of Reducer								L.Speed Shaft Speed r/min	
9110	9115	9118	9121	9126	9128	9131	9136		
5100	7800							250	Standard bearing model
5050	7800							160	
5500	8500	12200	12400	11900	9300	11550	11000	100	
7600	8500	12200	12400	12400	9850	14300	12500	63	
8500	8500	12200	12400	12400	13750	19500	15850	40	
8500	8500	12200	12400	12400	14700	19600	19600	<=25	
8500	8500							250	Heavy duty bearing model
8500	8500							160	
8500	8500							100	
8500	8500							63	
8500	8500							40	
8500	8500							<=25	

Units : kgf

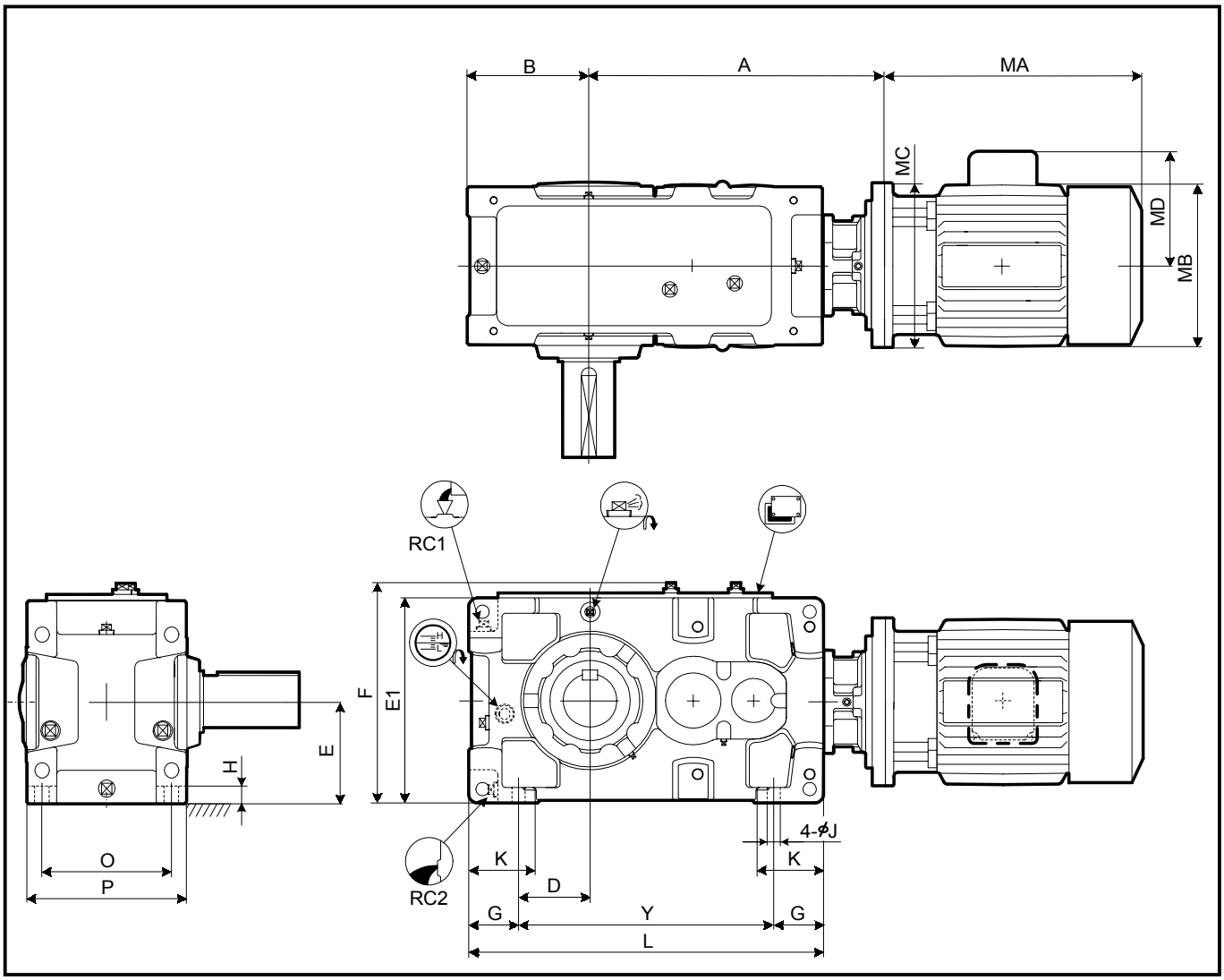

Slow Speed Shaft

Solid Shaft	Hollow Shaft (Shrink Disk Type)	Hollow Shaft (KeyType)
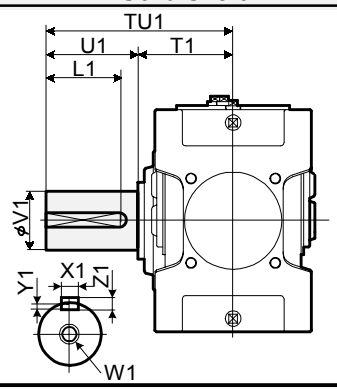	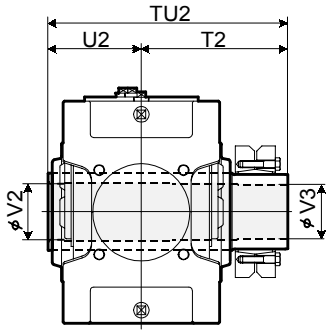 Refer to the page D-18 for details.	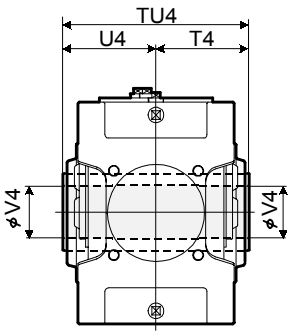 Refer to the page D -19 for details.

Standard Shaft Arrangement Configuration

RML	RMR	RMB	LMR	LML	LMB
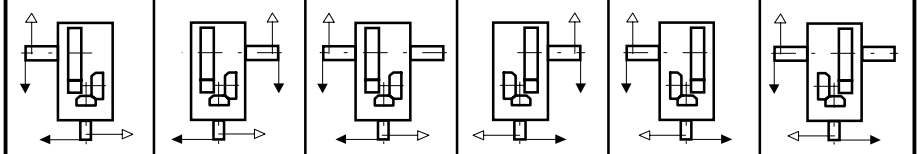					

1.Key and keyways are based on ISO R773-1969 Close keys(JIS B1301-1996 Parallel key in fastening type)
2.The oil quantity is approximate.Oil shall be supplied within the range shown on the oil gauge.
3. Refer to the page D - 12 for dimensions not shown in these drawings.
4. Refer to the page D - 24 for the dimension of optional parts.
5. Refer to the page D - 32 for motor terminal box position.
6. Refer to the page D - 34 for flange dimension.

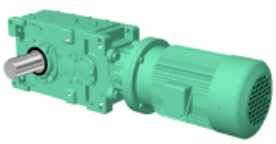

Size	A	B	D	E	E1	F	G	H	J	K	L	O	P	Y
9030	See below	200	110	160	320	349	90	28	24	120	590	215	265	410
9035		219	129	185	370	399	90	28	24	120	640	215	265	460
9040		235	120	200	400	431	115	30	28	150	685	255	315	455

Size	RC1	RC2	Oil Qty. (L)	Wt. (kg) *)	
				5.5-30kW	37-55kW
9030	3/4"	3/4"	10	240	255
9035	3/4"	3/4"	12	260	275
9040	1"	1"	16	340	350

*) Mass of drive unit with motor, add mass of motor flange and mass of motor, shown in table below.

kW	Motor							A			Mass of Motor Mounting Flange (kg)	Mass of Motor(kg)	
	Without Brake			With Brake			MD	9030	9035	9040		Without Brake	With Brake
	MA	MB	MC	MA	MB	MC							
11	480	251	350	575	251	350	188	540	571		11	76	96
15	545	324	350	700	324	350	232	540	571	595	11	131	175
18.5	625	394	400	835	394	400	297	540	571	595	17	213	258
22	625	394	400	835	394	400	297	540	571	595	17	213	258
30	625	394	400	835	394	400	297	540	571	595	17	224	280
37	715.5	394	450	930.5	394	450	297	570	601	625	15	259	320
45	715.5	394	450	930.5	394	450	297	570	601	625	15	259	320
55	769.5	484	550	-	-	-	412		601	625	29	276	-

Size	Solid Shaft									Hollow Shaft (Shrink Disk Type)					Hollow Shaft (Key Type)			
	TU1	T1	U1	V1	W1/Depth	Key				TU2	T2	U2	V2	V3	TU4	T4	U4	V4
						X1	Y1	Z1	L1									
9030	330	160	170	80m6	M20/42	22	9	14	150	393	233	160	83	80	330	165	165	75
9035	330	160	170	90m6	M20/42	25	9	14	150	403	243	160	88	85	330	165	165	85
9040	349	179	170	95m6	M24/50	25	9	14	150	448	268	180	98	95	360	180	180	90

Units : mm

Nomenclature

P H A [ ] R 2 - [ ] [ ] - [ ]

- Size: 9030, 9035, 9040
- Shaft Arrangement: RML, RMR, RMB, LMR, LML, LMB
- Low Speed Shaft Type:
  - (blank) : Solid Shaft
  - T : Hollow shaft (Shrink Disk type)
  - K : Hollow shaft (Key type)
- Nominal Reduction Ratio

Size	Nominal Reduction Ratio											
	6.3	7.1	8	9	10	11.2	12.5	14	16	18	20	22.4
9030	O	O	O	O	O	O	O	O	O	O		
9035			O	O	O	O	O	O	O	O	O	O
9040	O	O	O	O	O	O	O	O	O	O		

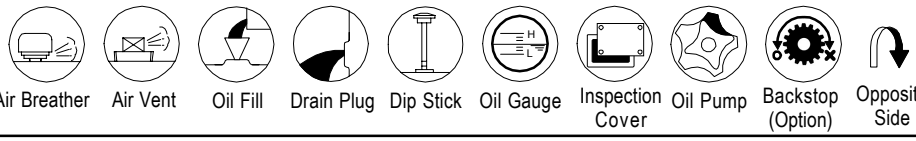

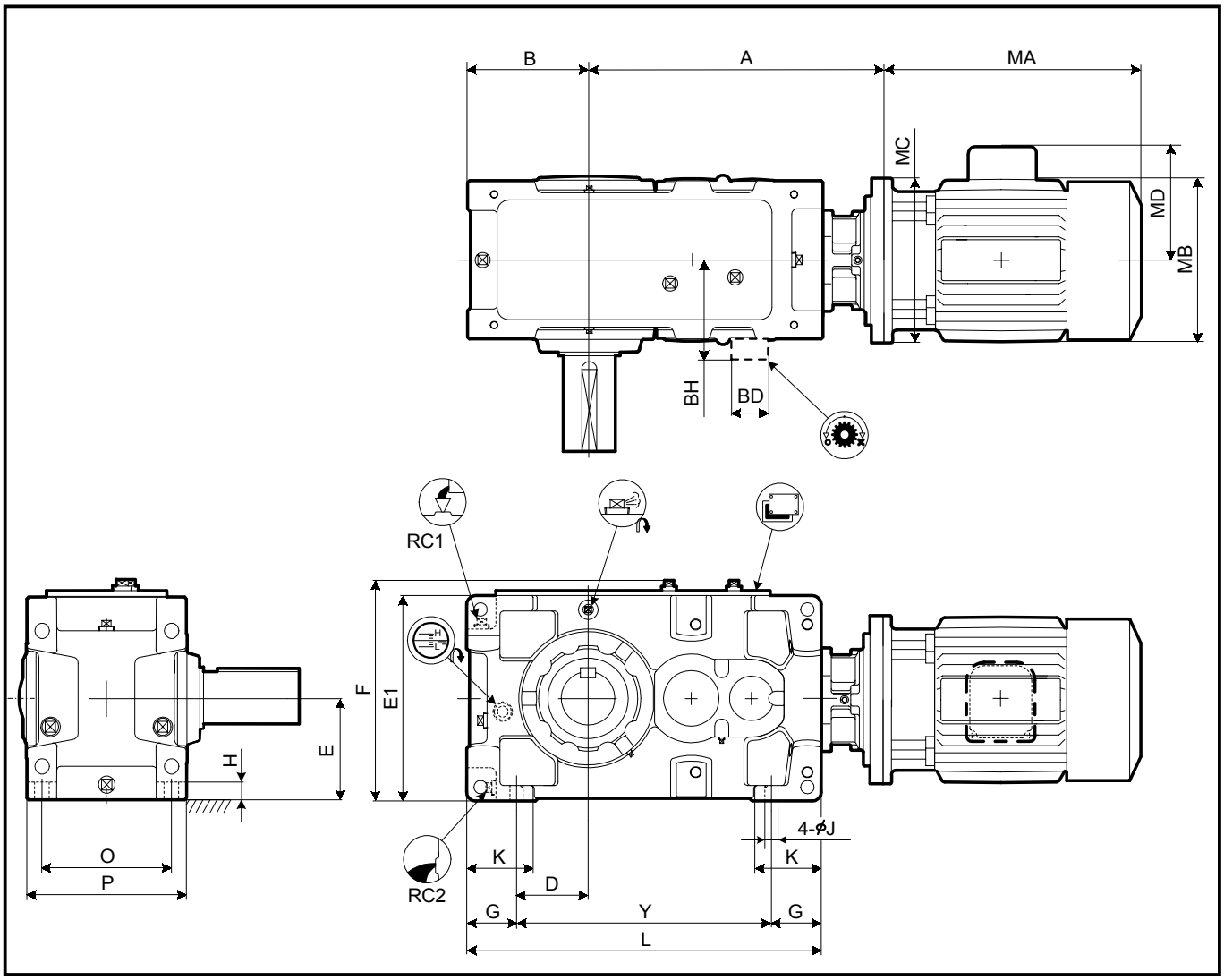

Slow Speed Shaft

Solid Shaft	Hollow Shaft (Shrink Disk Type)	Hollow Shaft (KeyType)
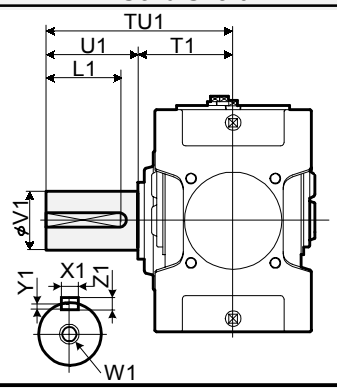	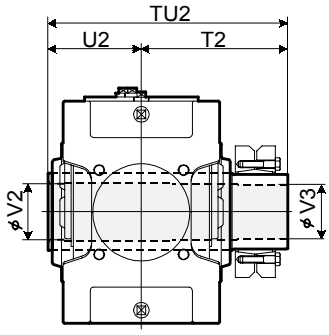 Refer to the page D-18 for details.	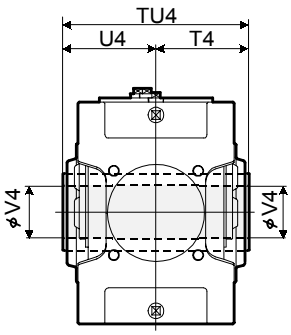 Refer to the page D -19 for details.

Standard Shaft Arrangement Configuration

RML	RMR	RMB	LMR	LML	LMB
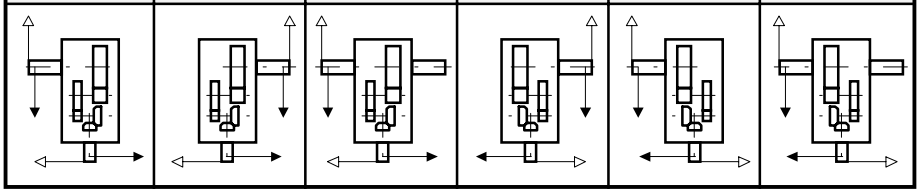					

1.Key and keyways are based on ISO R773-1969 Close keys(JIS B1301-1996 Parallel key in fastening type)
2.The oil quantity is approximate.Oil shall be supplied within the range shown on the oil gauge.
3. Refer to the page D - 12 for dimensions not shown in these drawings.
4. Refer to the page D - 24 for the dimension of optional parts.
5. Refer to the page D - 32 for motor terminal box position.
6. Refer to the page D - 34 for flange dimension.

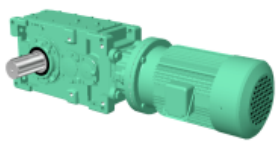

Size	A	B	D	E	E1	F	G	H	J	K	L	O	P	Y
9030	See below	200	110	160	320	349	90	28	24	120	590	215	265	410
9035		219	129	185	370	399	90	28	24	120	640	215	265	460
9040		235	120	200	400	431	115	30	28	150	685	255	315	455
9050		255	138.5	210	420	451	116.5	32	28	150	775	285	345	542
9055		286	171	245	490	521	115	32	28	150	845	285	345	615

Size	BD	BH	RC1	RC2	Oil Qty. (L)	Wt. (kg) *)	
						5.5-30kW	37-55kW
9030	100	200	3/4"	3/4"	10	240	250
9035	100	200	3/4"	3/4"	12	260	270
9040	125	235	1"	1"	16	325	345
9050	130	240	1"	1"	21	475	485
9055	130	240	1"	1"	28	535	545

*) Mass of drive unit with motor, add mass of motor flange and mass of motor, shown in table below.

kW	Motor							A					Mass of Motor Mounting Flange (kg)	Mass of Motor(kg)	
	Without Brake			With Brake			MD	9030	9035	9040	9050	9055		Without Brake	With Brake
	MA	MB	MC	MA	MB	MC									
5.5	382	212	315	454	212	315	144	540	571	595			8	43	54
7.5	415	251	315	510	251	315	185	540	571	595	675	714	8	57	77
11	480	251	350	575	251	350	188	540	571	595	675	714	11	76	96
15	545	324	350	700	324	350	232	540	571	595	675	714	11	131	175
18.5	625	394	400	835	394	400	297	540	571	595	675	714	17	213	258
22	625	394	400	835	394	400	297	540	571	595	675	714	17	213	258
30	625	394	400	835	394	400	297	540	571	595	675	714	17	224	280
37	715.5	394	450	930.5	394	450	297		601	625	705	744	15	259	320
45	715.5	394	450	930.5	394	450	297			625	705	744	15	259	320
55	769.5	484	550	-	-	-	412				705	744	29	276	-

Size	Solid Shaft									Hollow Shaft (Shrink Disk Type)					Hollow Shaft (Key Type)			
	TU1	T1	U1	V1	W1/Depth	Key				TU2	T2	U2	V2	V3	TU4	T4	U4	V4
						X1	Y1	Z1	L1									
9030	330	160	170	80m6	M20/42	22	9	14	150	393	233	160	83	80	330	165	165	75
9035	330	160	170	90m6	M20/42	25	9	14	150	403	243	160	88	85	330	165	165	85
9040	349	179	170	95m6	M24/50	25	9	14	150	448	268	180	98	95	360	180	180	90
9050	411	201	210	110m6	M24/50	28	10	16	190	503	303	200	108	105	410	205	205	105
9055	411	201	210	120m6	M24/50	32	11	18	185	528	323	205	123	120	410	205	205	115

Units : mm

Nomenclature

P H A [ ] R 3 - [ ] [ ] - [ ]

Size: 9030, 9035, 9040, 9050, 9055

Shaft Arrangement: RML, RMR, RMB, LMR, LML, LMB

Low Speed Shaft Type:
(blank) : Solid Shaft
T : Hollow shaft (Shrink Disk type)
K : Hollow shaft (Key type)

Nominal Reduction Ratio

Size	Nominal Reduction Ratio													
	20	22.4	25	28	31.5	35.5	40	45	50	56	63	71	80	90
9030	O	O	O	O	O	O	O	O	O	O	O	O		
9035			O	O	O	O	O	O	O	O		O	O	O
9040	O	O	O	O	O	O	O	O		O	O	O		
9050	O	O	O	O	O	O	O	O	O	O	O	O		
9055			O	O	O	O	O	O	O	O	O	O	O	O

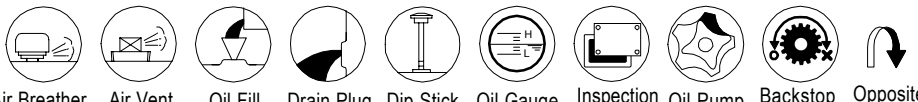

Air Breather, Air Vent, Oil Fill, Drain Plug, Dip Stick, Oil Gauge, Inspection Cover, Oil Pump, Backstop (Option), Opposite Side

Sumitomo Heavy Industries, Ltd.
http://www.shi.co.jp/ptc

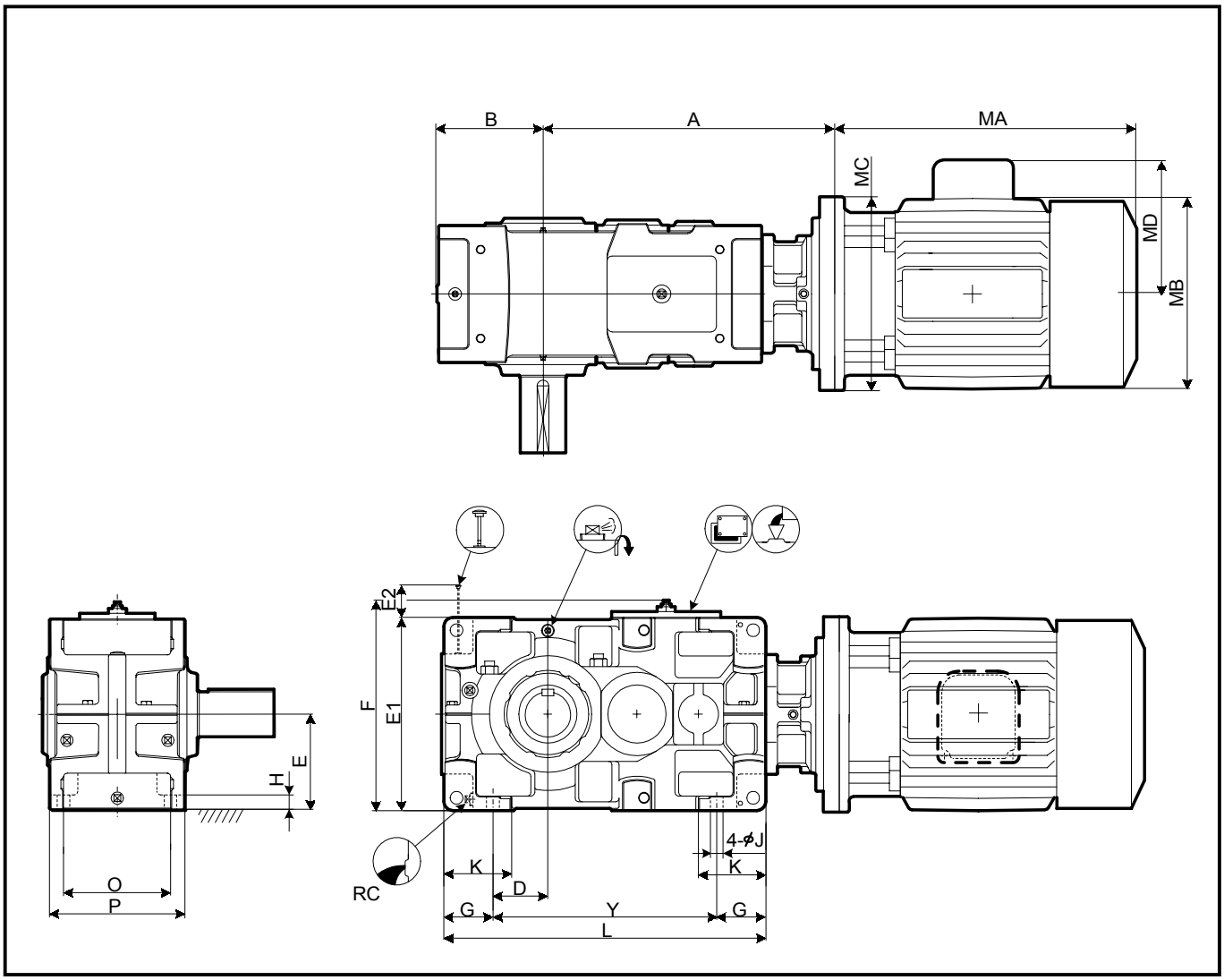

Slow Speed Shaft

Solid Shaft	Hollow Shaft (Shrink Disk Type)	Hollow Shaft (KeyType)
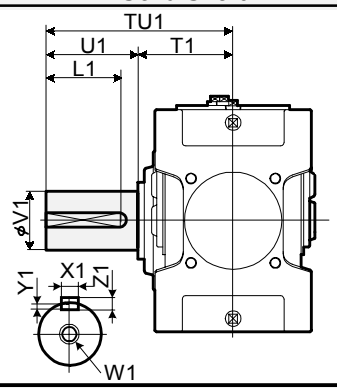	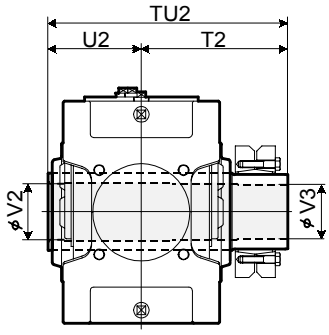 Refer to the page D-18 for details.	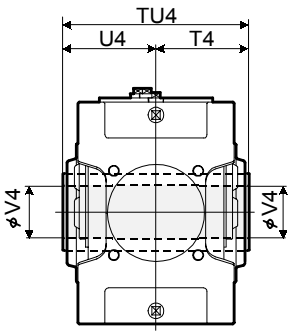 Refer to the page D -19 for details.

Standard Shaft Arrangement Configuration

RML	RMR	RMB	LMR	LML	LMB
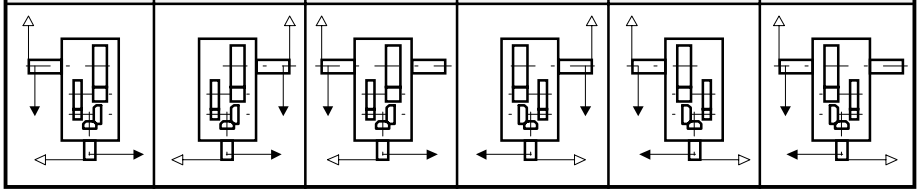					

1.Key and keyways are based on ISO R773-1969 Close keys(JIS B1301-1996 Parallel key in fastening type)
2.The oil quantity is approximate.Oil shall be supplied within the range shown on the oil gauge.
3. Refer to the page D - 14 for dimensions not shown in these drawings.
4. Refer to the page D - 27 for the dimension of optional parts.
5. Refer to the page D - 32 for motor terminal box position.
6. Refer to the page D - 34 for flange dimension.

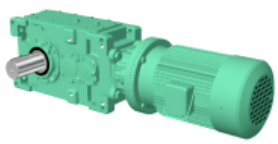

Size	A	B	D	E	E1	E2	F	G	H	J	K	L	O	P	Y
9060	See below	291	151	265	530	158	578	135	35	35	180	885	310	380	615
9070		328	163	300	600	183	648	160	40	42	215	1020	350	430	700
9075		375	210	335	670	148	718	160	52	42	220	1120	350	430	800

Size	BD	BH	RC	Oil Qty. (L)	Wt. (kg) *)	
					5.5-30kW	37-55kW
9060	150	266	1"	29	680	690
9070	175	308	1"	45	950	960
9075	175	308	1"	52	1200	1210

*) Mass of drive unit with motor, add mass of motor flange and mass of motor, shown in table below.

kW	Motor							A			Mass of Motor Mounting Flange (kg)	Mass of Motor(kg)	
	Without Brake			With Brake			MD	9060	9070	9075		Without Brake	With Brake
	MA	MB	MC	MA	MB	MC							
11	480	251	350	575	251	350	188	744			11	76	96
15	545	324	350	700	324	350	232	744			11	131	175
18.5	625	394	400	835	394	400	297	744	852	905	17	213	258
22	625	394	400	835	394	400	297	744	852	905	17	213	258
30	625	394	400	835	394	400	297	744	852	905	17	224	280
37	715.5	394	450	930.5	394	450	297	774	882	935	15	259	320
45	715.5	394	450	930.5	394	450	297	774	882	935	15	259	320
55	769.5	484	550	-	-	-	412	774	882	935	29	276	-

Size	Solid Shaft									Hollow Shaft (Shrink Disk Type)					Hollow Shaft (Key Type)			
	TU1	T1	U1	V1	W1/Depth	Key				TU2	T2	U2	V2	V3	TU4	T4	U4	V4
						X1	Y1	Z1	L1									
9060	440	230	210	125m6	M24/50	32	11	18	185	583	353	230	128	125	470	235	235	125
9070	509	259	250	145m6	M30/60	36	12	20	225	644	384	260	148	145	530	265	265	145
9075	562	262	300	160m6	M30/60	40	13	22	275	651	386	265	158	155	530	265	265	155

Units : mm

Nomenclature

P H D [ ] R 3 - [ ] [ ] - [ ]

Size: 9060, 9070, 9075

Shaft Arrangement: RML, RMR, RMB, LMR, LML, LMB

Low Speed Shaft Type:
- (blank) : Solid Shaft
- T : Hollow shaft (Shrink Disk type)
- K : Hollow shaft (Key type)

Nominal Reduction Ratio

Size	Nominal Reduction Ratio													
	20	22.4	25	28	31.5	35.5	40	45	50	56	63	71	80	90
9060	O	O	O	O	O	O	O	O	O	O	O	O		
9070	O	O	O	O	O	O	O	O	O	O	O	O		
9075				O	O	O	O	O	O	O	O	O	O	O

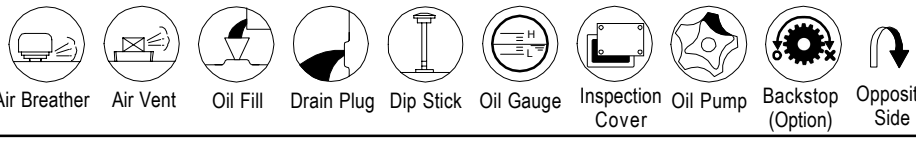

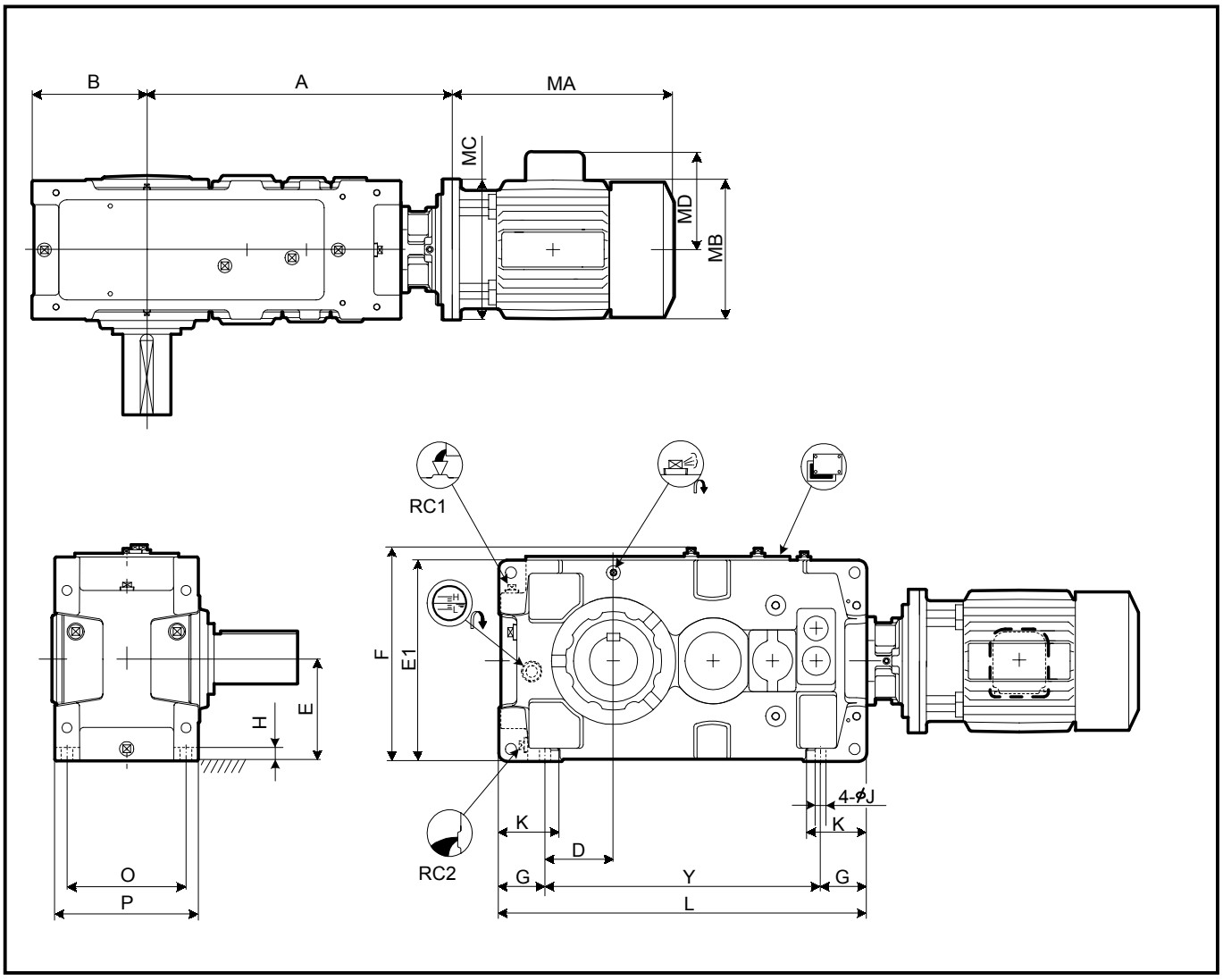

Slow Speed Shaft

Solid Shaft	Hollow Shaft (Shrink Disk Type)	Hollow Shaft (KeyType)
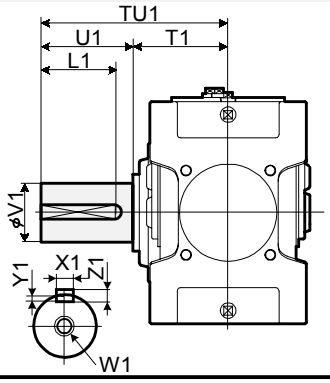	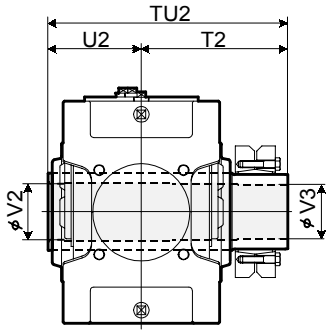 Refer to the page D-18 for details.	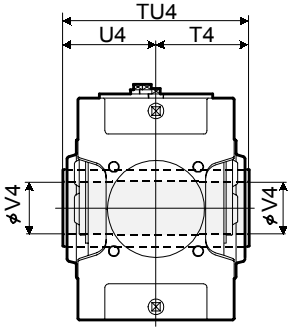 Refer to the page D -19 for details.

Standard Shaft Arrangement Configuration

RML	RMR	RMB	LMR	LML	LMB
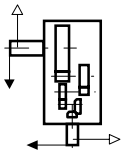	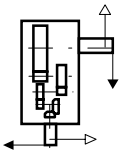	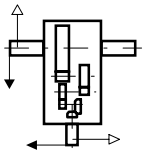	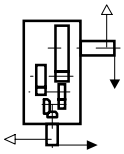	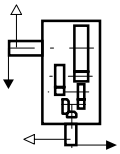	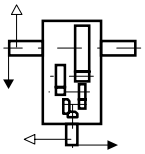

1.Key and keyways are based on ISO R773-1969 Close keys(JIS B1301-1996 Parallel key in fastening type)
2.The oil quantity is approximate.Oil shall be supplied within the range shown on the oil gauge.
3. Refer to the page D - 13 for dimensions not shown in these drawings.
4. Refer to the page D - 24 for the dimension of optional parts.
5. Refer to the page D - 32 for motor terminal box position.
6. Refer to the page D - 34 for flange dimension.

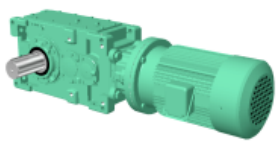

Size	A	B	D	E	E1	F	G	H	J	K	L	O	P	Y
9040	See below	235	120	200	400	431	115	30	28	150	759	255	315	529
9050		255	138.5	210	420	451	116.5	32	28	150	848	285	345	615
9055		286	171	245	490	521	115	32	28	150	918	285	345	688

Size	RC1	RC2	Oil Qty. (L)	Wt. (kg) *)	
				5.5-30kW	37-55kW
9040	1"	1"	19	355	365
9050	1"	1"	24	490	500
9055	1"	1"	29	550	560

*) Mass of drive unit with motor, add mass of motor flange and mass of motor, shown in table below.

kW	Motor							A			Mass of Motor Mounting Flange (kg)	Mass of Motor(kg)	
	Without Brake			With Brake			MD	9040	9050	9055		Without Brake	With Brake
	MA	MB	MC	MA	MB	MC							
5.5	382	212	315	454	212	315	144	674	743	782	8	43	54
7.5	415	251	315	510	251	315	185	674	743	782	8	57	77
11	480	251	350	575	251	350	188	674	743	782	11	76	96
15	545	324	350	700	324	350	232	674	743	782	11	131	175
18.5	625	394	400	835	394	400	297	674	743	782	17	213	258
22	625	394	400	835	394	400	297	674	743	782	17	213	258
30	625	394	400	835	394	400	297		743	782	17	224	280

Size	Solid Shaft									Hollow Shaft (Shrink Disk Type)					Hollow Shaft (Key Type)			
	TU1	T1	U1	V1	W1/Depth	Key				TU2	T2	U2	V2	V3	TU4	T4	U4	V4
						X1	Y1	Z1	L1									
9040	349	179	170	95m6	M24/50	25	9	14	150	448	268	180	98	95	360	180	180	90
9050	411	201	210	110m6	M24/50	28	10	16	190	503	303	200	108	105	410	205	205	105
9055	411	201	210	120m6	M24/50	32	11	18	185	528	323	205	123	120	410	205	205	115

Units : mm

Nomenclature

P H A [ ] R 4 - [ ] [ ] - [ ]

Size: 9040, 9050, 9055

Shaft Arrangement: RML, RMR, RMB, LMR, LML, LMB

Low Speed Shaft Type:
(blank) : Solid Shaft
T : Hollow shaft (Shrink Disk type)
K : Hollow shaft (Key type)

Nominal Reduction Ratio

Size	80	90	100	112	125	140	160	180	200	224	250	280	315	355	400	450
9040	O	O	O	O	O	O										
9050	O	O	O	O	O	O	O	O	O	O	O	O	O	O		
9055				O	O	O	O	O	O	O	O	O	O	O	O	O

Air Breather

Air Vent

Oil Fill

Drain Plug

Dip Stick

Oil Gauge

Inspection Cover

Oil Pump

Backstop (Option)

Opposite Side

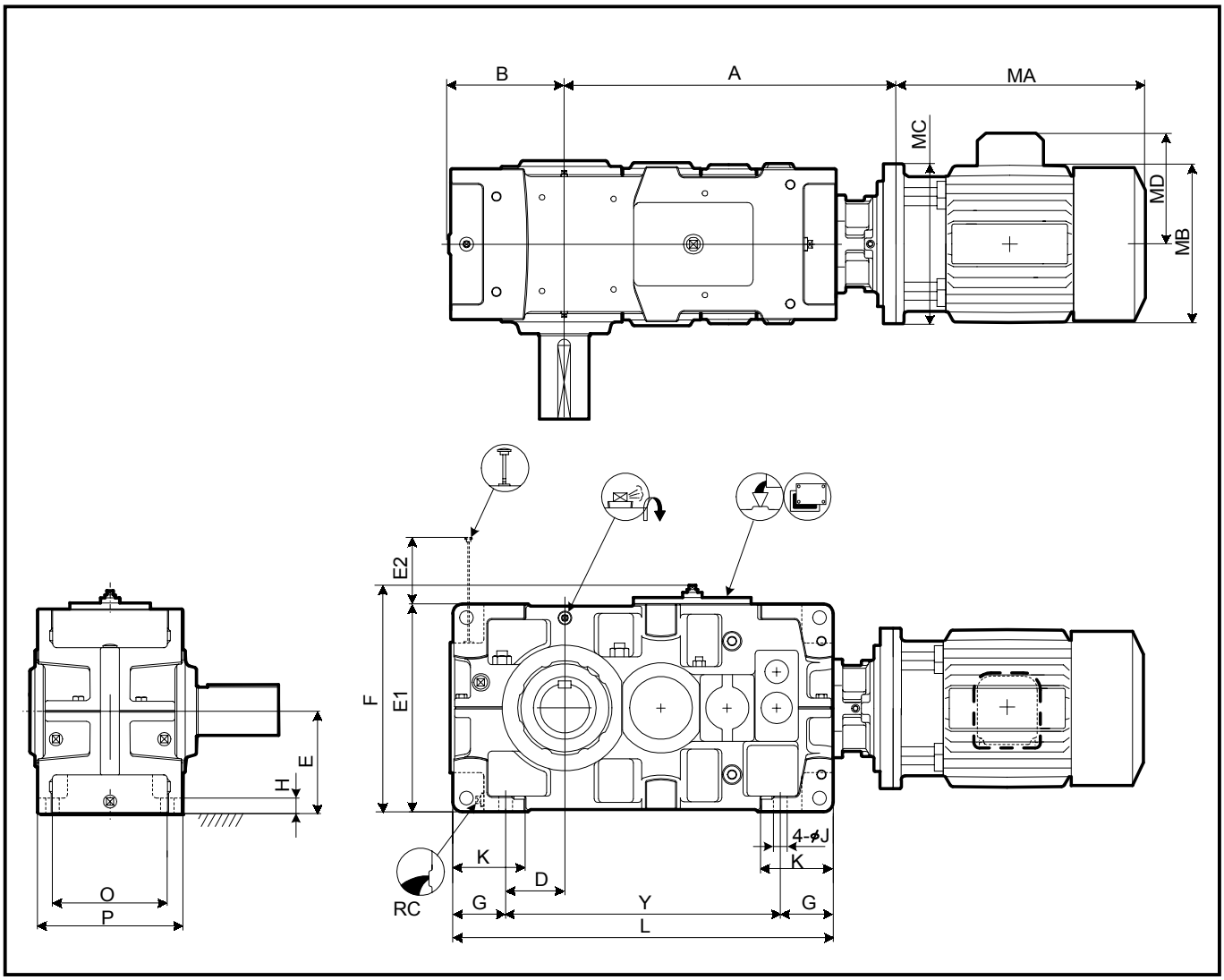

Slow Speed Shaft

Solid Shaft	Hollow Shaft (Shrink Disk Type)	Hollow Shaft (KeyType)
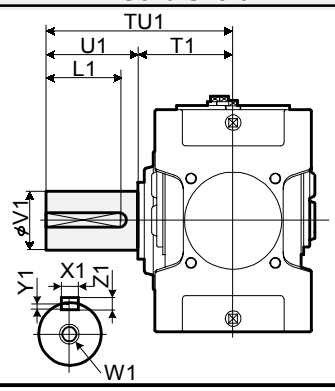	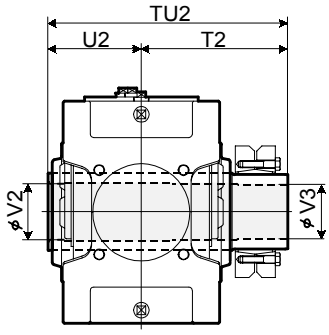 Refer to the page D-18 for details.	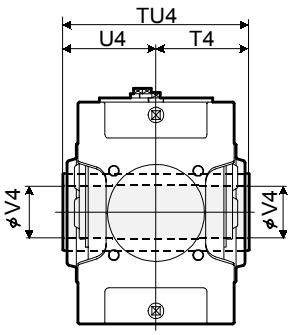 Refer to the page D -19 for details.

Standard Shaft Arrangement Configuration

RML	RMR	RMB	LMR	LML	LMB
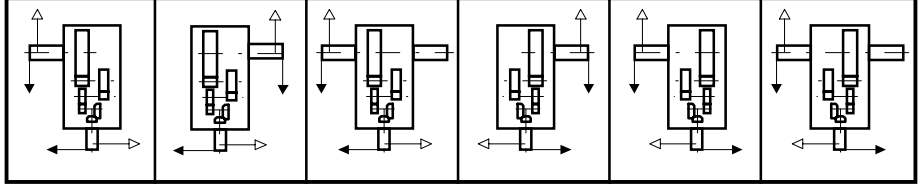					

1.Key and keyways are based on ISO R773-1969 Close keys(JIS B1301-1996 Parallel key in fastening type)
2.The oil quantity is approximate.Oil shall be supplied within the range shown on the oil gauge.
3. Refer to the page D - 15 for dimensions not shown in these drawings.
4. Refer to the page D - 27 for the dimension of optional parts.
5. Refer to the page D - 32 for motor terminal box position.
6. Refer to the page D - 34 for flange dimension.

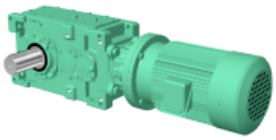

Size	A	B	D	E	E1	E2	F	G	H	J	K	L	O	P	Y
9060	See below	291	151	265	530	121	578	135	35	35	180	970	310	380	700
9070		328	163	300	600	140	648	160	40	42	215	1115	350	430	795
9075		375	210	335	670	105	718	160	52	42	220	1215	350	430	895
9080		370	205	335	670	162	718	160	52	42	220	1275	380	460	955
9085		414	249	375	750	122	798	160	52	42	220	1375	380	460	1055

Size	RC	Oil Qty (L)	Wt. (kg) *)	
			5.5-30kW	37-55kW
9060	1"	38	700	710
9070	1"	57	990	1000
9075	1"	67	1210	1220
9080	1"	73	1410	1420
9085	1"	90	1670	1680

*) Mass of drive unit with motor, add mass of motor flange and mass of motor, shown in table below.

kW	Motor							A					Mass of Motor Mounting Flange (kg)	Mass of Motor(kg)	
	Without Brake			With Brake			MD	9060	9070	9075	9080	9085		Without Brake	With Brake
	MA	MB	MC	MA	MB	MC									
5.5	382	212	315	454	212	315	144	829	947	1000	1055	1111	8	43	54
7.5	415	251	315	510	251	315	185	829	947	1000	1055	1111	8	57	77
11	480	251	350	575	251	350	188	829	947	1000	1055	1111	11	76	96
15	545	324	350	700	324	350	232	829	947	1000	1055	1111	11	131	175
18.5	625	394	400	835	394	400	297	829	947	1000	1055	1111	17	213	258
22	625	394	400	835	394	400	297	829	947	1000	1055	1111	17	213	258
30	625	394	400	835	394	400	297	829	947	1000	1055	1111	17	224	280
37	715.5	394	450	930.5	394	450	297	859	977	1030	1085	1141	15	259	320
45	715.5	394	450	930.5	394	450	297	859	977	1030	1085	1141	15	259	320
55	769.5	484	550	-	-	-	412		977	1030	1085	1141	29	276	-

Size	Solid Shaft									Hollow Shaft (Shrink Disk Type)					Hollow Shaft (Key Type)			
	TU1	T1	U1	V1	W1/Depth	Key				TU2	T2	U2	V2	V3	TU4	T4	U4	V4
						X1	Y1	Z1	L1									
9060	440	230	210	125m6	M24/50	32	11	18	185	583	353	230	128	125	470	235	235	125
9070	509	259	250	145m6	M30/60	36	12	20	225	644	384	260	148	145	530	265	265	145
9075	562	262	300	160m6	M30/60	40	13	22	275	651	386	265	158	155	530	265	265	155
9080	582	282	300	165m6	M30/60	40	13	22	275	714	429	285	173	170	570	285	285	165
9085	585	285	300	175m6	M30/60	45	15	25	270	714	429	285	183	180	570	285	285	175

Units : mm

Nomenclature

P H D [ ] R 4 - [ ] [ ] - [ ]

Size: 9060, 9070, 9075, 9080, 9085

Shaft Arrangement: RML, RMR, RMB, LMR, LML, LMB

Low Speed Shaft Type:
(blank) : Solid Shaft
T : Hollow shaft (Shrink Disk type)
K : Hollow shaft (Key type)

Nominal Reduction Ratio

Size	80	90	100	112	125	140	160	180	200	224	250	280	315	355	400	450
9060		O	O	O	O	O	O	O	O	O	O	O	O	O		
9070	O	O	O	O	O	O	O	O	O	O	O	O	O	O		
9075			O	O	O	O	O	O		O	O	O	O	O	O	O
9080	O	O	O	O	O	O	O	O	O	O	O	O	O	O		
9085			O	O	O	O	O	O	O	O	O	O	O	O	O	O

Air Breather

Air Vent

Oil Fill

Drain Plug

Dip Stick

Oil Gauge

Inspection Cover

Oil Pump

Backstop (Option)

Opposite Side

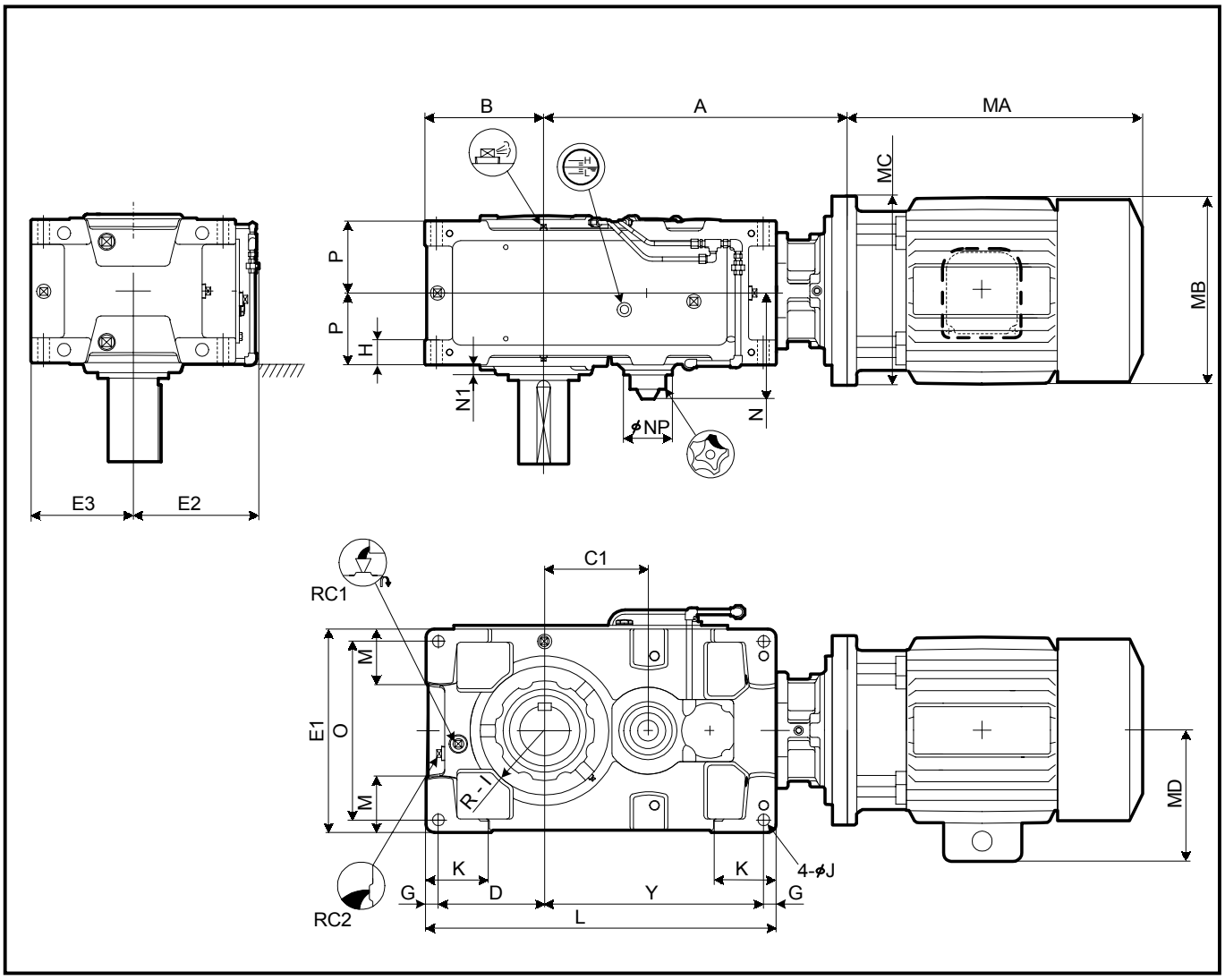

Slow Speed Shaft

Solid Shaft	Hollow Shaft (Shrink Disk Type)	Hollow Shaft (KeyType)
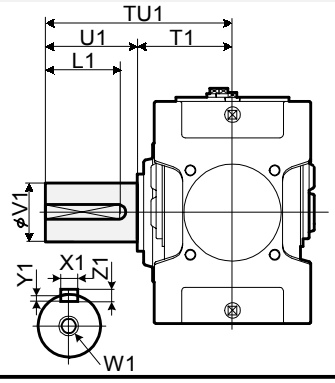	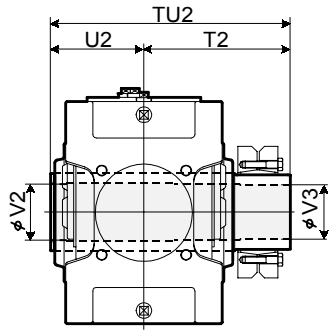	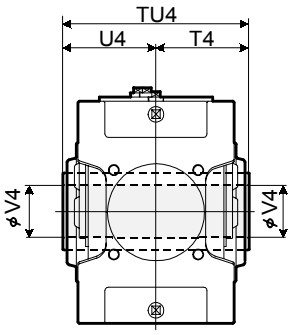
	Refer to the page D-18 for details.	Refer to the page D -19 for details.

Standard Shaft Arrangement Configuration

RML	RMR
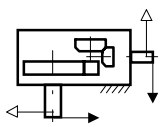	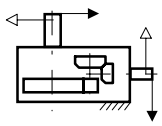

1.Key and keyways are based on ISO R773-1969 Close keys(JIS B1301-1996 Parallel key in fastening type)
2.The oil quantity is approximate.Oil shall be supplied within the range shown on the oil gauge.
3. Refer to the page D - 12 for dimensions not shown in these drawings.
4. Refer to the page D - 25 for the dimension of optional parts.
5. Refer to the page D - 32 for motor terminal box position.
6. Refer to the page D - 34 for flange dimension.

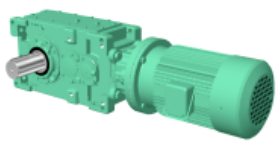

Size	A	B	C1	D	E1	E2	E3	G	H	I	J	K	L	M	N	N1	NP	O	P	Y
9030	See below	200	155	175	320	220	160	25	50	105	24	120	590	85	221	22	117	270	132.5	365
9035		219	186	194	370	245	185	25	50	120	24	120	640	100	221	22	117	320	132.5	396
9040		235	180	205	400	260	200	30	60	120	28	150	685	100	239	15	117	340	157.5	420

Size	RC1	RC2	Oil Qty. (L)	Wt. (kg) *)	
				5.5-30kW	37-55kW
9030	3/4"	3/4"	7	240	255
9035	3/4"	3/4"	9	260	275
9040	1"	1"	19	340	350

*) Mass of drive unit with motor, add mass of motor flange and mass of motor, shown in table below.

kW	Motor							A			Mass of Motor Mounting Flange (kg)	Mass of Motor(kg)	
	Without Brake			With Brake			MD	9030	9035	9040		Without Brake	With Brake
	MA	MB	MC	MA	MB	MC							
11	480	251	350	575	251	350	188	540	571		11	76	96
15	545	324	350	700	324	350	232	540	571	595	11	131	175
18.5	625	394	400	835	394	400	297	540	571	595	17	213	258
22	625	394	400	835	394	400	297	540	571	595	17	213	258
30	625	394	400	835	394	400	297	540	571	595	17	224	280
37	715.5	394	450	930.5	394	450	297	570	601	625	15	259	320
45	715.5	394	450	930.5	394	450	297	570	601	625	15	259	320
55	769.5	484	550	-	-	-	412		601	625	29	276	-

Size	Solid Shaft									Hollow Shaft (Shrink Disk Type)					Hollow Shaft (Key Type)			
	TU1	T1	U1	V1	W1/Depth	Key				TU2	T2	U2	V2	V3	TU4	T4	U4	V4
						X1	Y1	Z1	L1									
9030	330	160	170	80m6	M20/42	22	9	14	150	393	233	160	83	80	330	165	165	75
9035	330	160	170	90m6	M20/42	25	9	14	150	403	243	160	88	85	330	165	165	85
9040	349	179	170	95m6	M24/50	25	9	14	150	448	268	180	98	95	360	180	180	90

Units : mm

Nomenclature

P V A [ ] R 2 - [ ] [ ] - [ ]

- Size: 9030, 9035, 9040
- Shaft Arrangement: RML, RMR
- Low Speed Shaft Type:
  - (blank) : Solid Shaft
  - T : Hollow shaft (Shrink Disk type)
  - K : Hollow shaft (Key type)
- Nominal Reduction Ratio

Size	Nominal Reduction Ratio											
	6.3	7.1	8	9	10	11.2	12.5	14	16	18	20	22.4
9030	O	O	O	O	O	O	O	O	O	O		
9035			O	O	O	O	O	O	O	O	O	O
9040	O	O	O	O	O	O	O	O	O	O		

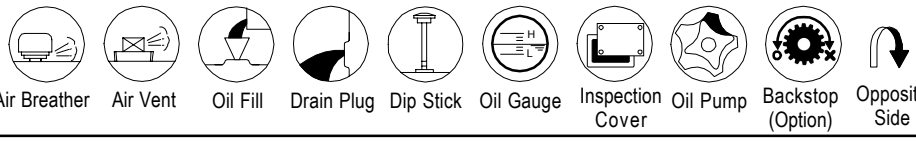

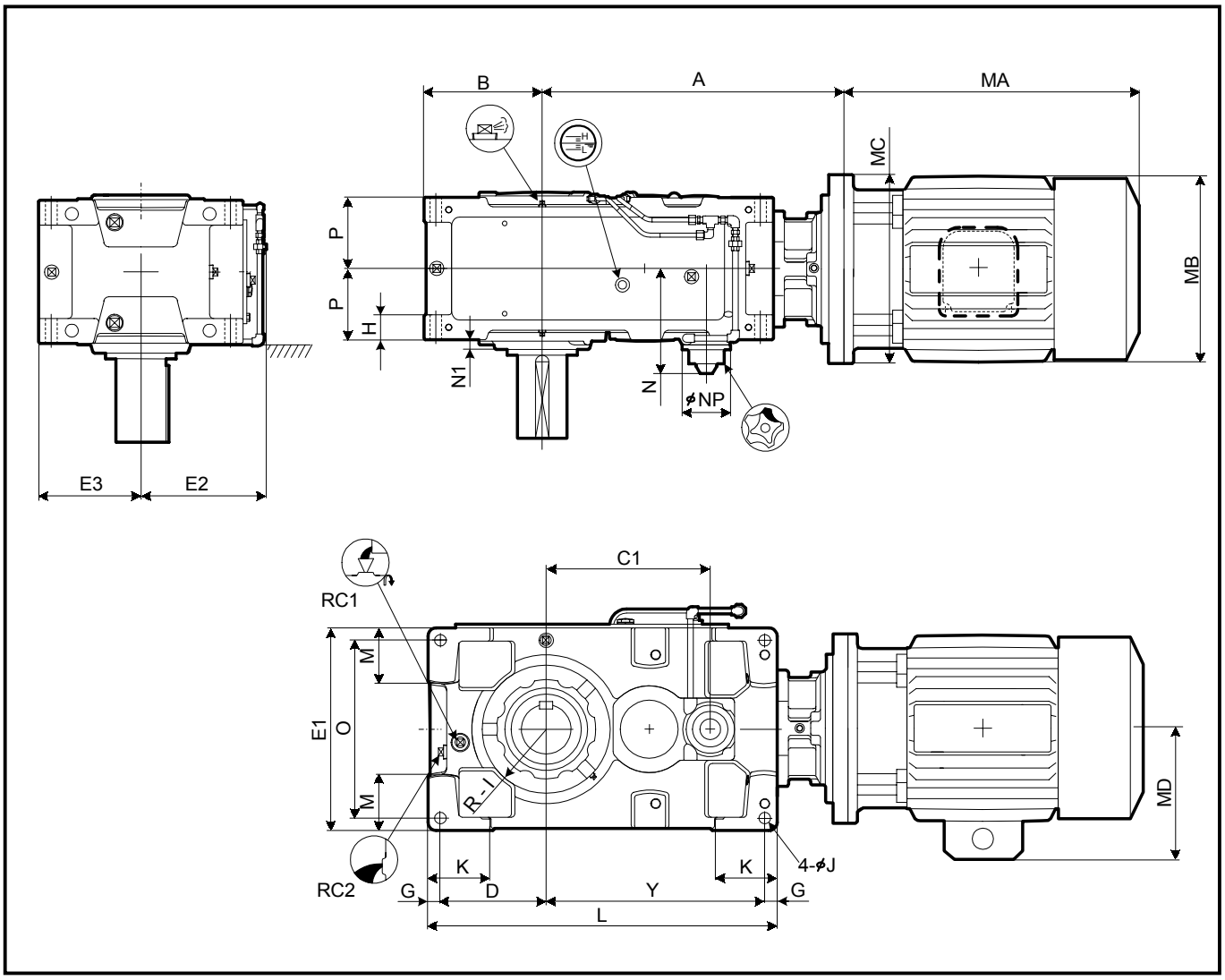

Slow Speed Shaft

Solid Shaft	Hollow Shaft (Shrink Disk Type)	Hollow Shaft (KeyType)
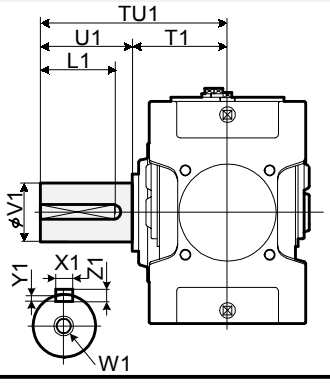	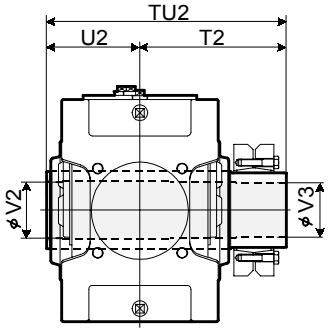 Refer to the page D-18 for details.	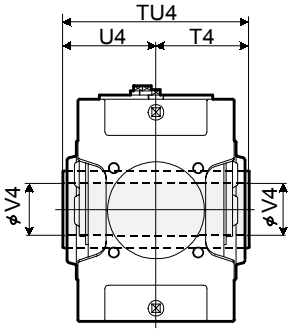 Refer to the page D -19 for details.

Standard Shaft Arrangement Configuration

RML	RMR
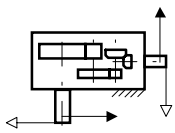	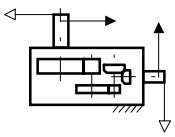

1.Key and keyways are based on ISO R773-1969 Close keys(JIS B1301-1996 Parallel key in fastening type)
2.The oil quantity is approximate.Oil shall be supplied within the range shown on the oil gauge.
3. Refer to the page D - 12 for dimensions not shown in these drawings.
4. Refer to the page D - 25 for the dimension of optional parts.
5. Refer to the page D - 32 for motor terminal box position.
6. Refer to the page D - 34 for flange dimension.

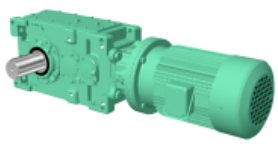

Size	A	B	C1	D	E1	E2	E3	G	H	I	J	K	L	M	N	N1	NP	O	P	Y
9030	See below	200	264	175	320	220	160	25	50	105	24	120	590	85	208	22	100	270	132.5	365
9035		219	295	194	370	245	185	25	50	120	24	120	640	100	208	22	100	320	132.5	396
9040		235	306	205	400	260	200	30	60	120	28	150	685	100	239	15	117	340	157.5	420
9050		255	358	225	420	270	210	30	60	140	28	150	775	110	255	23	117	360	172.5	490
9055		286	397	256	490	305	245	30	60	155	28	150	845	135	255	23	117	430	172.5	529

Size	RC1	RC2	Oil Qty. (L)	Wt. (kg) *)	
				5.5-30kW	37-55kW
9030	3/4"	3/4"	9	240	250
9035	3/4"	3/4"	12	260	270
9040	1"	1"	18	326	345
9050	1"	1"	21	475	485
9055	1"	1"	30	535	545

*) Mass of drive unit with motor, add mass of motor flange and mass of motor, shown in table below.

kW	Motor							A					Mass of Motor Mounting Flange (kg)	Mass of Motor(kg)	
	Without Brake			With Brake			MD	9030	9035	9040	9050	9055		Without Brake	With Brake
	MA	MB	MC	MA	MB	MC									
5.5	382	212	315	454	212	315	144	540	571	595			8	43	54
7.5	415	251	315	510	251	315	185	540	571	595	675	714	8	57	77
11	480	251	350	575	251	350	188	540	571	595	675	714	11	76	96
15	545	324	350	700	324	350	232	540	571	595	675	714	11	131	175
18.5	625	394	400	835	394	400	297	540	571	595	675	714	17	213	258
22	625	394	400	835	394	400	297	540	571	595	675	714	17	213	258
30	625	394	400	835	394	400	297	540	571	595	675	714	17	224	280
37	715.5	394	450	930.5	394	450	297		601	625	705	744	15	259	320
45	715.5	394	450	930.5	394	450	297			625	705	744	15	259	320
55	769.5	484	550	-	-	-	412				705	744	29	276	-

Size	Solid Shaft									Hollow Shaft (Shrink Disk Type)					Hollow Shaft (Key Type)			
	TU1	T1	U1	V1	W1/Depth	Key				TU2	T2	U2	V2	V3	TU4	T4	U4	V4
						X1	Y1	Z1	L1									
9030	330	160	170	80m6	M20/42	22	9	14	150	393	233	160	83	80	330	165	165	75
9035	330	160	170	90m6	M20/42	25	9	14	150	403	243	160	88	85	330	165	165	85
9040	349	179	170	95m6	M24/50	25	9	14	150	448	268	180	98	95	360	180	180	90
9050	411	201	210	110m6	M24/50	28	10	16	190	503	303	200	108	105	410	205	205	105
9055	411	201	210	120m6	M24/50	32	11	18	185	528	323	205	123	120	410	205	205	115

Units : mm

Nomenclature

P V A [ ] R 3 - [ ] [ ] - [ ]

- Size: 9030, 9035, 9040, 9050, 9055
- Shaft Arrangement: RML, RMR
- Low Speed Shaft Type:
  - (blank) : Solid Shaft
  - T : Hollow shaft (Shrink Disk type)
  - K : Hollow shaft (Key type)
- Nominal Reduction Ratio

Size	Nominal Reduction Ratio													
	20	22.4	25	28	31.5	35.5	40	45	50	56	63	71	80	90
9030	O	O	O	O	O	O	O	O	O	O	O	O		
9035			O	O	O	O	O	O	O	O		O	O	O
9040	O	O	O	O	O	O	O	O		O	O	O		
9050	O	O	O	O	O	O	O	O	O	O	O	O		
9055			O	O	O	O	O	O	O	O	O	O	O	O

Air Breather | Air Vent | Oil Fill | Drain Plug | Dip Stick | Oil Gauge | Inspection Cover | Oil Pump | Backstop (Option) | Opposite Side

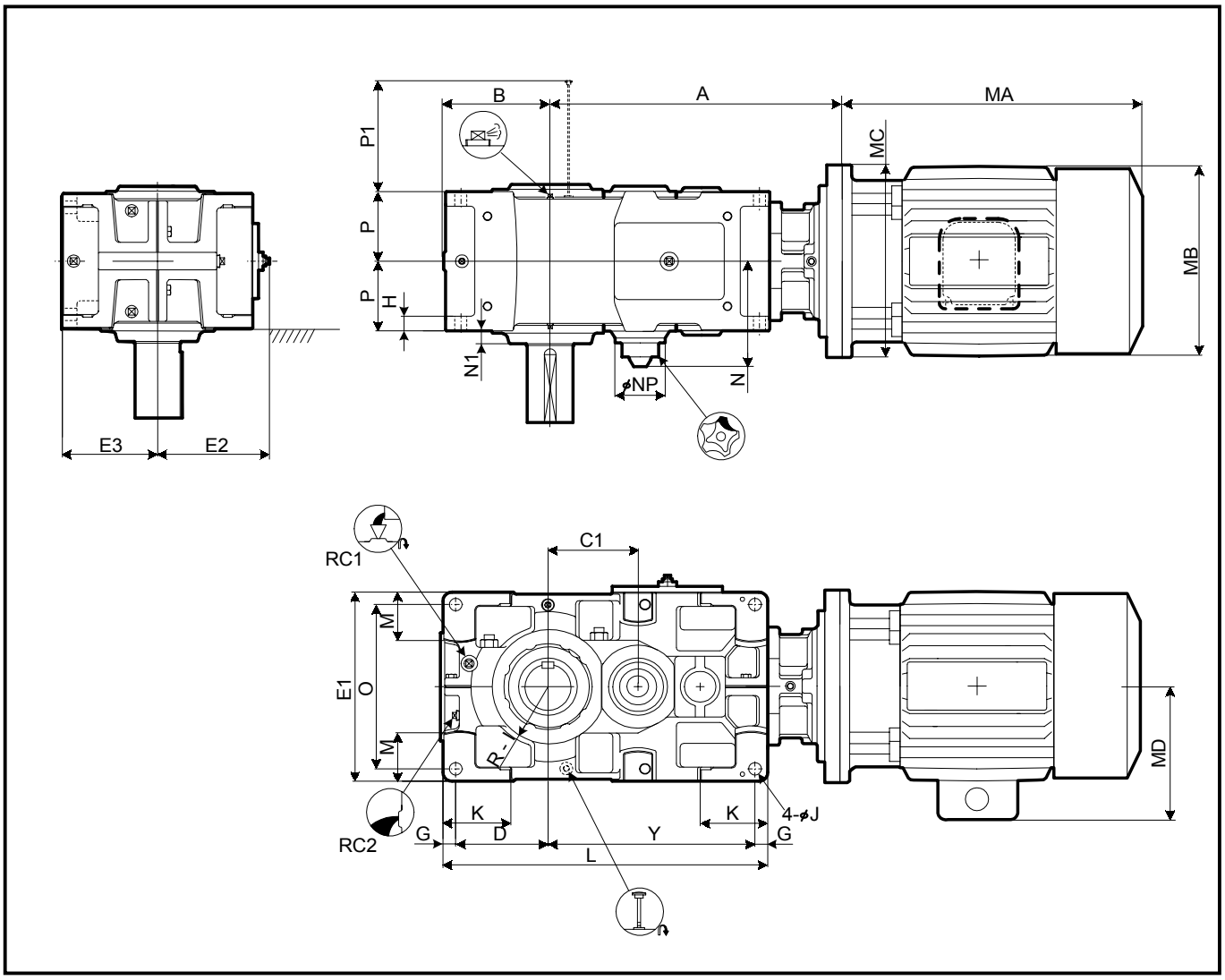

Slow Speed Shaft

Solid Shaft	Hollow Shaft (Shrink Disk Type)	Hollow Shaft (KeyType)
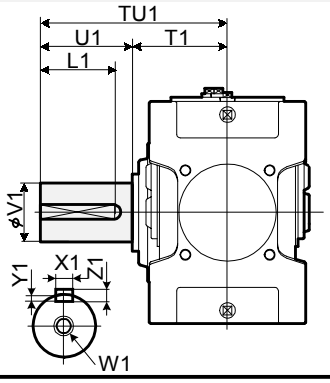	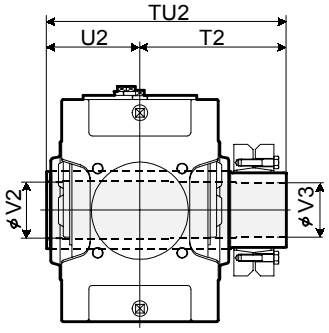 Refer to the page D-18 for details.	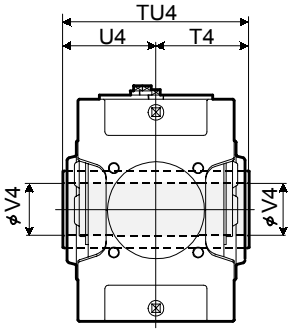 Refer to the page D -19 for details.

Standard Shaft Arrangement Configuration

RML	RMR
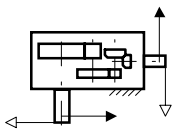	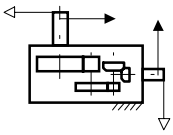

1.Key and keyways are based on ISO R773-1969 Close keys(JIS B1301-1996 Parallel key in fastening type)
2.The oil quantity is approximate.Oil shall be supplied within the range shown on the oil gauge.
3. Refer to the page D - 14 for dimensions not shown in these drawings.
4. Refer to the page D - 28 for the dimension of optional parts.
5. Refer to the page D - 32 for motor terminal box position.
6. Refer to the page D - 34 for flange dimension.

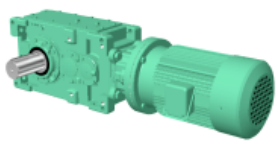

Size	A	B	C1	D	E1	E2	E3	G	H	I	J	K	L	M	N	N1	NP	O	P	P1	Y
9060	See below	291	414	251	530	313	265	35	35	160	35	180	885	140	275	35	117	460	190	213	564
9070		328	482	283	600	348	300	40	40	175	42	215	1020	155	300	38	117	520	215	233	657
9075		375	535	330	670	383	335	40	52	190	42	220	1120	195	300	40	117	590	215	233	710

Size	RC1	RC2	Oil Qty (L)	Wt. (kg) *)	
				5.5-30kW	37-55kW
9060	1"	1"	28	680	690
9070	1"	1"	46	950	960
9075	1"	1"	59	1200	1210

*) Mass of drive unit with motor, add mass of motor flange and mass of motor, shown in table below.

kW	Motor						MD	A			Mass of Motor Mounting Flange (kg)	Mass of Motor(kg)	
	Without Brake			With Brake				9060	9070	9075		Without Brake	With Brake
	MA	MB	MC	MA	MB	MC							
11	480	251	350	575	251	350	188	744			11	76	96
15	545	324	350	700	324	350	232	744			11	131	175
18.5	625	394	400	835	394	400	297	744	852	905	17	213	258
22	625	394	400	835	394	400	297	744	852	905	17	213	258
30	625	394	400	835	394	400	297	744	852	905	17	224	280
37	715.5	394	450	930.5	394	450	297	774	882	935	15	259	320
45	715.5	394	450	930.5	394	450	297	774	882	935	15	259	320
55	769.5	484	550	-	-	-	412	774	882	935	29	276	-

Size	Solid Shaft									Hollow Shaft (Shrink Disk Type)					Hollow Shaft (Key Type)			
	TU1	T1	U1	V1	W1/Depth	Key				TU2	T2	U2	V2	V3	TU4	T4	U4	V4
						X1	Y1	Z1	L1									
9060	440	230	210	125m6	M24/50	32	11	18	185	583	353	230	128	125	470	235	235	125
9070	509	259	250	145m6	M30/60	36	12	20	225	644	384	260	148	145	530	265	265	145
9075	562	262	300	160m6	M30/60	40	13	22	275	651	386	265	158	155	530	265	265	155

Units : mm

Nomenclature

P V D [ ] R 3 - [ ] [ ] - [ ]

- Size: 9060, 9070, 9075
- Shaft Arrangement: RML, RMR
- Low Speed Shaft Type:
  - (blank) : Solid Shaft
  - T : Hollow shaft (Shrink Disk type)
  - K : Hollow shaft (Key type)
- Nominal Reduction Ratio

Size	Nominal Reduction Ratio													
	20	22.4	25	28	31.5	35.5	40	45	50	56	63	71	80	90
9060	O	O	O	O	O	O	O	O	O	O	O	O		
9070	O	O	O	O	O	O	O	O	O	O	O	O		
9075				O	O	O	O	O	O	O	O	O	O	O

Air Breather

Air Vent

Oil Fill

Drain Plug

Dip Stick

Oil Gauge

Inspection Cover

Oil Pump

Backstop (Option)

Opposite Side

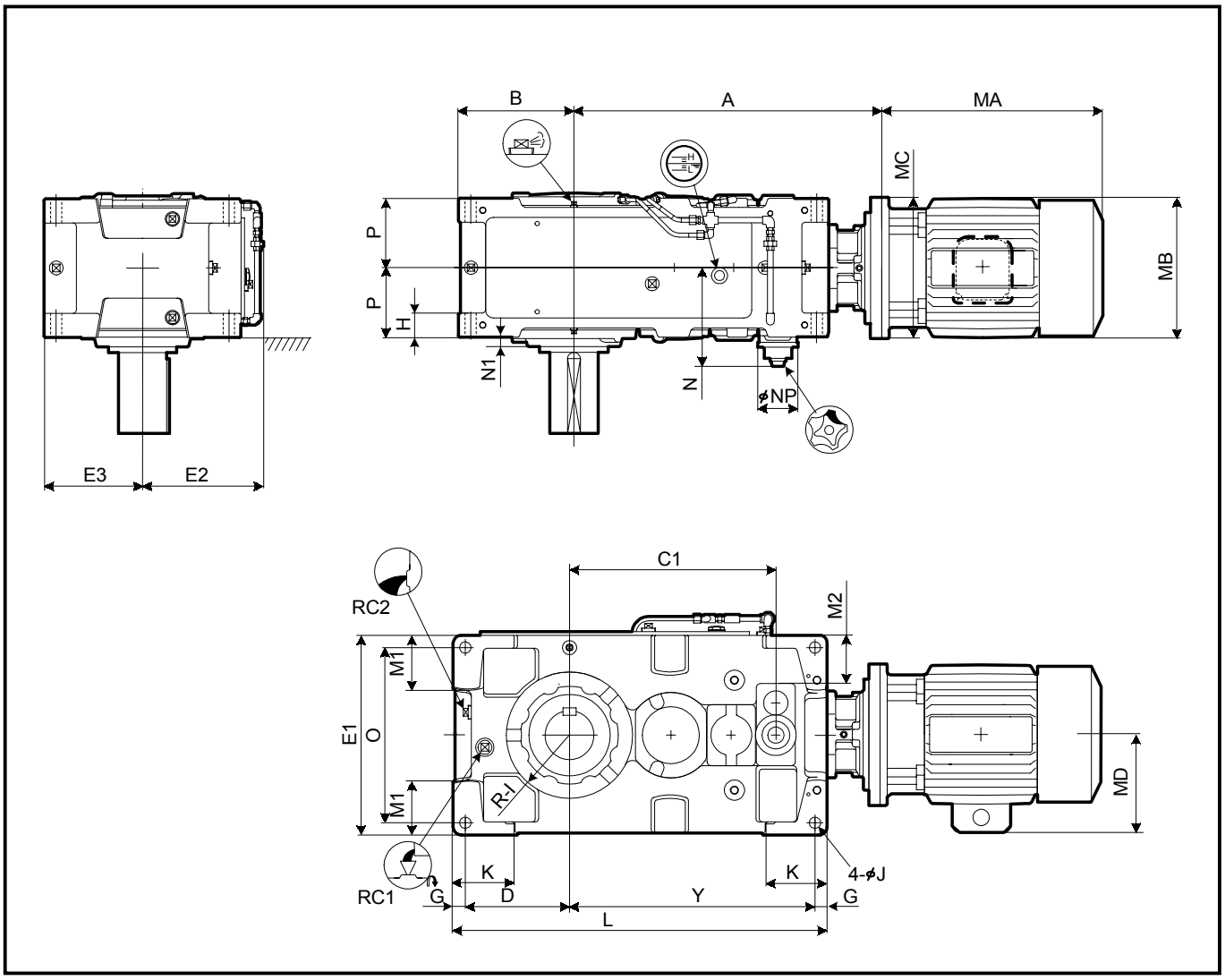

Slow Speed Shaft

Solid Shaft	Hollow Shaft (Shrink Disk Type)	Hollow Shaft (KeyType)
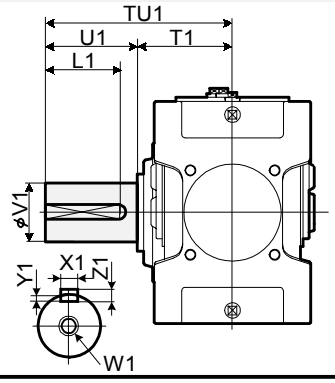	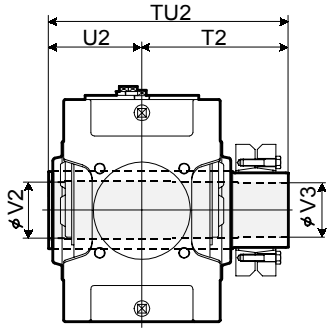 Refer to the page D-18 for details.	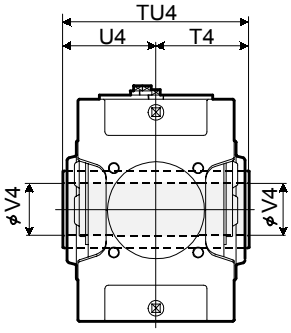 Refer to the page D -19 for details.

Standard Shaft Arrangement Configuration

LMR	LML
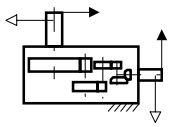	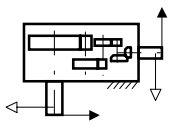

1.Key and keyways are based on ISO R773-1969 Close keys(JIS B1301-1996 Parallel key in fastening type)
2.The oil quantity is approximate.Oil shall be supplied within the range shown on the oil gauge.
3. Refer to the page D - 13 for dimensions not shown in these drawings.
4. Refer to the page D - 25 for the dimension of optional parts.
5. Refer to the page D - 32 for motor terminal box position.
6. Refer to the page D - 34 for flange dimension.

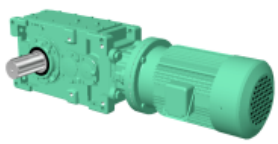

Size	A	B	C1	D	E1	E2	E3	G	H	I	J	K	L	M1	M2	N	N1	NP	O	P	Y
9040	See below	235	398	205	400	260	200	30	60	120	28	150	759	100	70	225	15	100	340	157.5	494
9050		255	467	225	420	270	210	30	60	140	28	150	848	110	83	245	23	100	360	172.5	563
9055		286	506	256	490	305	245	30	60	155	28	150	918	135	118	245	23	100	430	172.5	602

Size	RC1	RC2	Oil Qty (L)	Wt. (kg) *)	
				5.5-30kW	37-55kW
9040	1"	1"	18	355	365
9050	1"	1"	24	490	500
9055	1"	1"	34	550	560

*) Mass of drive unit with motor, add mass of motor flange and mass of motor, shown in table below.

kW	Motor							A			Mass of Motor Mounting Flange (kg)	Mass of Motor(kg)	
	Without Brake			With Brake			MD	9040	9050	9055		Without Brake	With Brake
	MA	MB	MC	MA	MB	MC							
5.5	382	212	315	454	212	315	144	674	743	782	8	43	54
7.5	415	251	315	510	251	315	185	674	743	782	8	57	77
11	480	251	350	575	251	350	188	674	743	782	11	76	96
15	545	324	350	700	324	350	232	674	743	782	11	131	175
18.5	625	394	400	835	394	400	297	674	743	782	17	213	258
22	625	394	400	835	394	400	297	674	743	782	17	213	258
30	625	394	400	835	394	400	297		743	782	17	224	280

Size	Solid Shaft									Hollow Shaft (Shrink Disk Type)					Hollow Shaft (Key Type)			
	TU1	T1	U1	V1	W1/Depth	Key				TU2	T2	U2	V2	V3	TU4	T4	U4	V4
						X1	Y1	Z1	L1									
9040	349	179	170	95m6	M24/50	25	9	14	150	448	268	180	98	95	360	180	180	90
9050	411	201	210	110m6	M24/50	28	10	16	190	503	303	200	108	105	410	205	205	105
9055	411	201	210	120m6	M24/50	32	11	18	185	528	323	205	123	120	410	205	205	115

Units : mm

Nomenclature

P V A [ ] R 4 - [ ] [ ] - [ ]

Size: 9040, 9050, 9055

Shaft Arrangement: LMR, LML

Low Speed Shaft Type:
- (blank) : Solid Shaft
- T : Hollow shaft (Shrink Disk type)
- K : Hollow shaft (Key type)

Nominal Reduction Ratio

Size	Nominal Reduction Ratio															
	80	90	100	112	125	140	160	180	200	224	250	280	315	355	400	450
9040	O	O	O	O	O	O										
9050	O	O	O	O	O	O	O	O	O	O	O	O	O	O		
9055				O	O	O	O	O	O	O	O	O	O	O	O	O

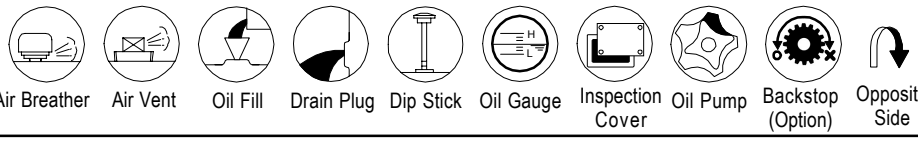

Air Breather, Air Vent, Oil Fill, Drain Plug, Dip Stick, Oil Gauge, Inspection Cover, Oil Pump, Backstop (Option), Opposite Side

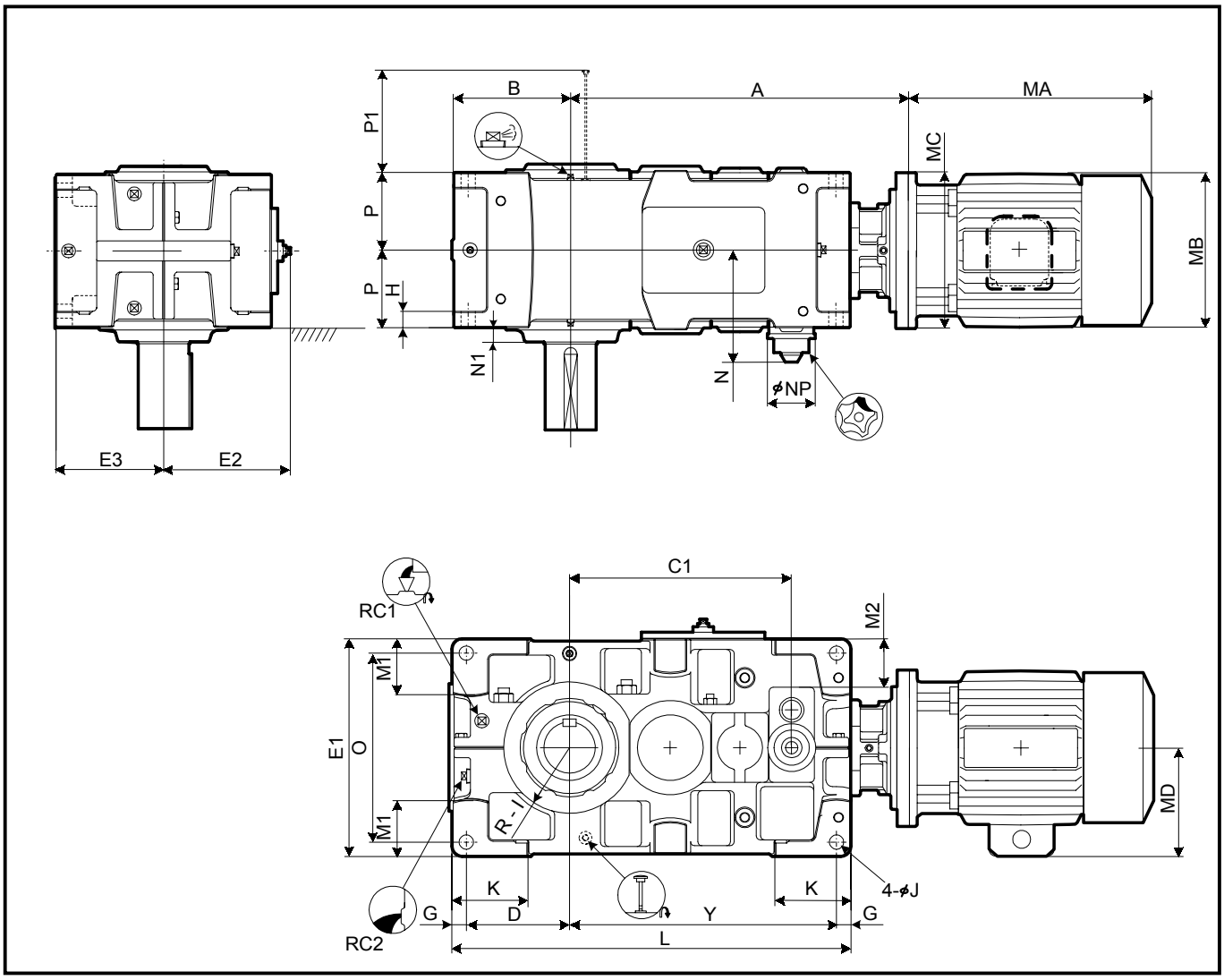

Slow Speed Shaft

Solid Shaft	Hollow Shaft (Shrink Disk Type)	Hollow Shaft (KeyType)
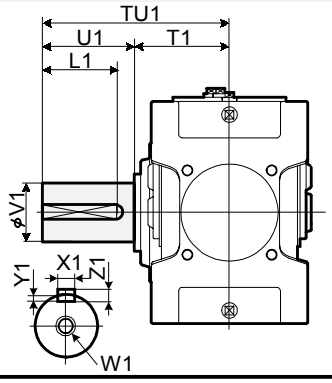	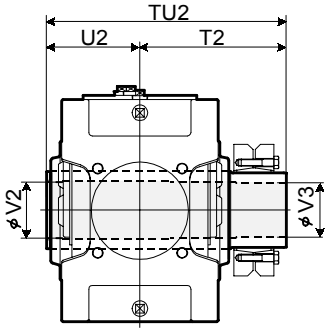 Refer to the page D-18 for details.	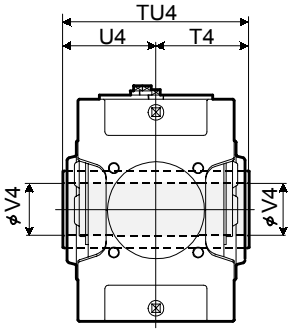 Refer to the page D -19 for details.

Standard Shaft Arrangement Configuration

LMR	LML
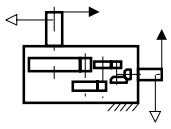	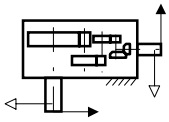

1.Key and keyways are based on ISO R773-1969 Close keys(JIS B1301-1996 Parallel key in fastening type)
2.The oil quantity is approximate.Oil shall be supplied within the range shown on the oil gauge.
3. Refer to the page D - 15 for dimensions not shown in these drawings.
4. Refer to the page D - 28 for the dimension of optional parts.
5. Refer to the page D - 32 for motor terminal box position.
6. Refer to the page D - 34 for flange dimension.

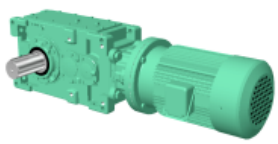

Size	A	B	C1	D	E1	E2	E3	G	H	I	J	K	L	M1	M2	N	NP	N1	O	P	P1	Y
9060	See below	291	540	251	530	313	265	35	35	160	35	180	970	140	118	275	117	35	460	190	203	649
9070		328	630	283	600	348	300	40	40	175	42	215	1115	155	128	300	117	38	520	215	233	752
9075		375	683	330	670	383	335	40	52	190	42	220	1215	195	163	300	117	40	590	215	233	805
9080		370	725	325	670	383	335	40	52	190	42	220	1275	170	140	320	117	45	590	230	263	870
9085		414	781	369	750	423	375	40	52	215	42	220	1375	210	180	320	117	40	670	230	263	926

Size	RC1	RC2	Oil Qty. (L)	Wt. (kg) *)	
				5.5-30kW	37-55kW
9060	1"	1"	36	700	710
9070	1"	1"	54	990	1000
9075	1"	1"	68	1210	1220
9080	1"	1"	69	1410	1420
9085	1"	1"	94	1670	1680

*) Mass of drive unit with motor, add mass of motor flange and mass of motor, shown in table below.

kW	Motor						MD	A					Mass of Motor Mounting Flange (kg)	Mass of Motor(kg)	
	Without Brake			With Brake										Without Brake	With Brake
	MA	MB	MC	MA	MB	MC		9060	9070	9075	9080	9085			
5.5	382	212	315	454	212	315	144	829	947	1000	1055	1111	8	43	54
7.5	415	251	315	510	251	315	185	829	947	1000	1055	1111	8	57	77
11	480	251	350	575	251	350	188	829	947	1000	1055	1111	11	76	96
15	545	324	350	700	324	350	232	829	947	1000	1055	1111	11	131	175
18.5	625	394	400	835	394	400	297	829	947	1000	1055	1111	17	213	258
22	625	394	400	835	394	400	297	829	947	1000	1055	1111	17	213	258
30	625	394	400	835	394	400	297	829	947	1000	1055	1111	17	224	280
37	715.5	394	450	930.5	394	450	297	859	977	1030	1085	1141	15	259	320
45	715.5	394	450	930.5	394	450	297	859	977	1030	1085	1141	15	259	320
55	769.5	484	550	-	-	-	412		977	1030	1085	1141	29	276	-

Size	Solid Shaft									Hollow Shaft (Shrink Disk Type)					Hollow Shaft (Key Type)			
	TU1	T1	U1	V1	W1/Depth	Key				TU2	T2	U2	V2	V3	TU4	T4	U4	V4
						X1	Y1	Z1	L1									
9060	440	230	210	125m6	M24/50	32	11	18	185	583	353	230	128	125	470	235	235	125
9070	509	259	250	145m6	M30/60	36	12	20	225	644	384	260	148	145	530	265	265	145
9075	562	262	300	160m6	M30/60	40	13	22	275	651	386	265	158	155	530	265	265	155
9080	582	282	300	165m6	M30/60	40	13	22	275	714	429	285	173	170	570	285	285	165
9085	585	285	300	175m6	M30/60	45	15	25	270	714	429	285	183	180	570	285	285	175

Units : mm

Nomenclature

P V D [ ] R 4 - [ ] [ ] - [ ]

Size: 9060, 9070, 9075, 9080, 9085

Shaft Arrangement: LMR, LML

Low Speed Shaft Type:
(blank) : Solid Shaft
T : Hollow shaft (Shrink Disk type)
K : Hollow shaft (Key type)

Nominal Reduction Ratio

Size	Nominal Reduction Ratio															
	80	90	100	112	125	140	160	180	200	224	250	280	315	355	400	450
9060		O	O	O	O	O	O	O	O	O	O	O	O	O		
9070	O	O	O	O	O	O	O	O	O	O	O	O	O	O		
9075			O	O	O	O	O	O		O	O	O	O	O	O	O
9080	O	O	O	O	O	O	O	O	O	O	O	O	O	O		
9085			O	O	O	O	O	O	O	O	O	O	O	O	O	O

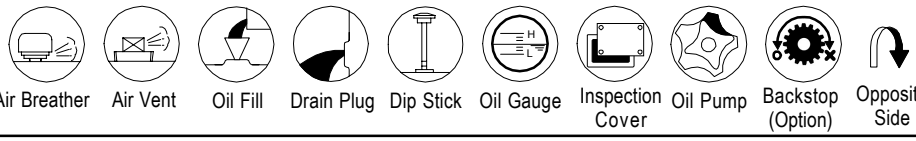

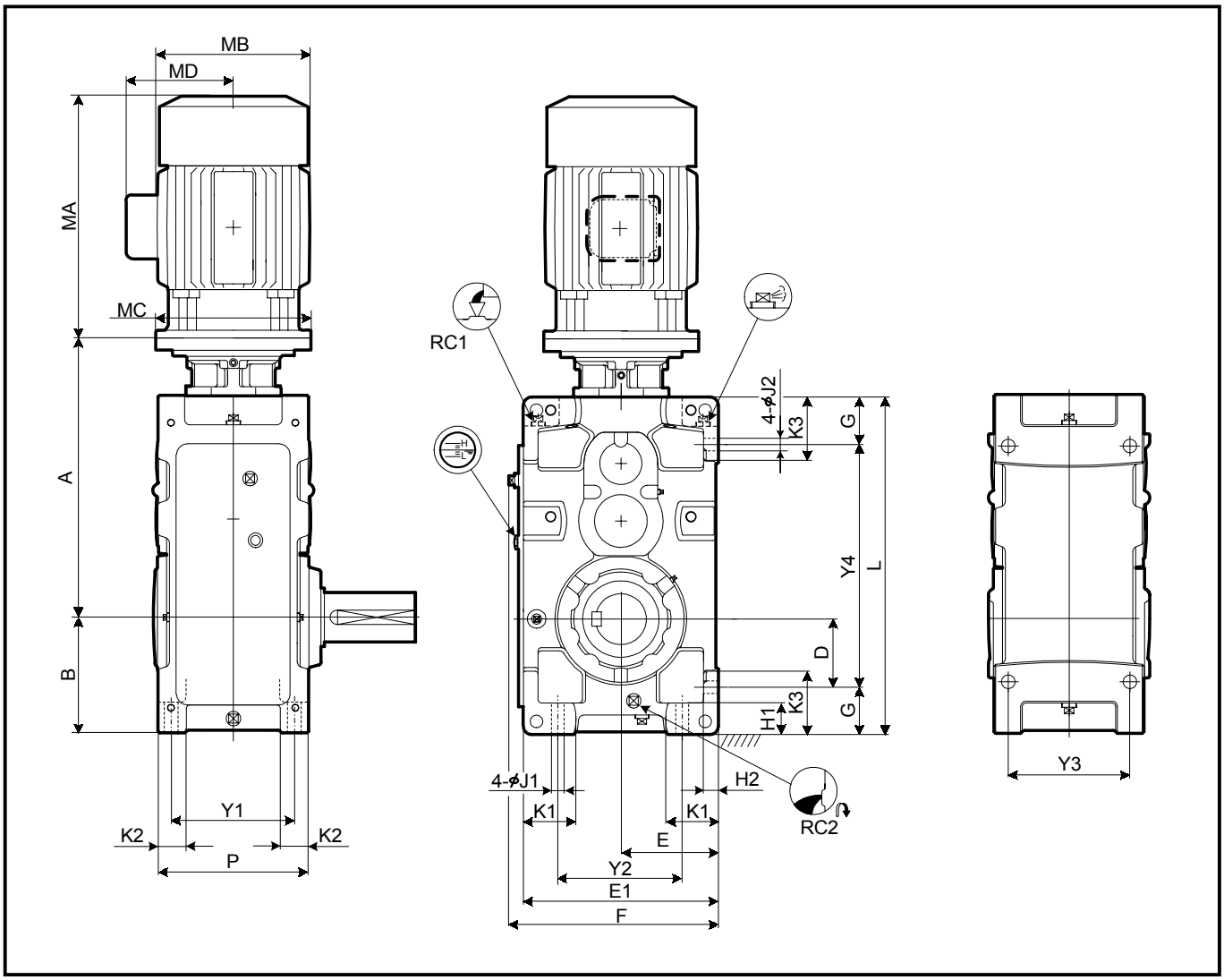

Slow Speed Shaft

Solid Shaft	Hollow Shaft (Shrink Disk Type)	Hollow Shaft (KeyType)
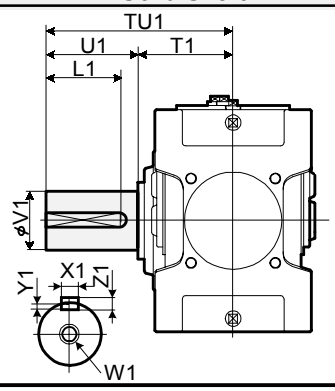	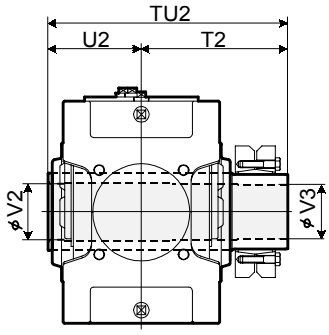	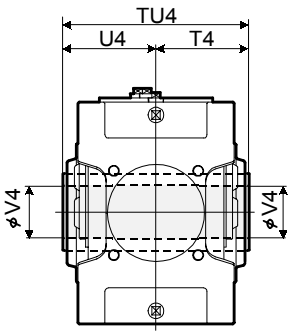
	Refer to the page D-18 for details.	Refer to the page D -19 for details.

Standard Shaft Arrangement Configuration

RML	RMR	RMB	LMR	LML	LMB
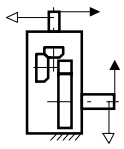	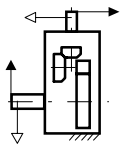	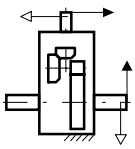	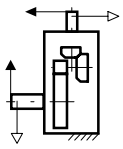	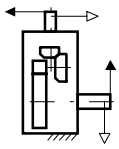	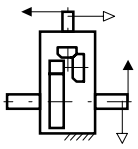

1.Key and keyways are based on ISO R773-1969 Close keys(JIS B1301-1996 Parallel key in fastening type)
2.The oil quantity is approximate.Oil shall be supplied within the range shown on the oil gauge.
3. Refer to the page D - 12 for dimensions not shown in these drawings.
4. Refer to the page D - 26 for the dimension of optional parts.
5. Refer to the page D - 33 for motor terminal box position.
6. Refer to the page D - 34 for flange dimension.

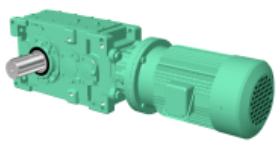

Size	A	B	D	E	E1	F	G	H1	H2	J1	J2	K1	K2	K3	L	P	Y1	Y2	Y3	Y4
9030	See below	200	110	160	320	348	90	60	28	24	24	85	50	120	590	265	215	200	215	410
9035		219	129	185	370	398	90	60	28	24	24	100	50	120	640	265	215	250	215	460
9040		235	120	200	400	430	115	75	30	28	28	100	60	150	685	315	255	260	255	455

Size	RC1	RC2	Oil Qty. (L)	Wt. (kg) *)	
				5.5-30kW	37-55kW
9030	3/4"	3/4"	14	240	255
9035	3/4"	3/4"	19	260	275
9040	1"	1"	24	340	350

*) Mass of drive unit with motor, add mass of motor flange and mass of motor, shown in table below.

kW	Motor							A			Mass of Motor Mounting Flange (kg)	Mass of Motor(kg)	
	Without Brake			With Brake			MD	9030	9035	9040		Without Brake	With Brake
	MA	MB	MC	MA	MB	MC							
11	480	251	350	575	251	350	188	540	571		11	76	96
15	545	324	350	700	324	350	232	540	571	595	11	131	175
18.5	625	394	400	835	394	400	297	540	571	595	17	213	258
22	625	394	400	835	394	400	297	540	571	595	17	213	258
30	625	394	400	835	394	400	297	540	571	595	17	224	280
37	715.5	394	450	930.5	394	450	297	570	601	625	15	259	320
45	715.5	394	450	930.5	394	450	297	570	601	625	15	259	320
55	769.5	484	550	-	-	-	412		601	625	29	276	-

Size	Solid Shaft									Hollow Shaft (Shrink Disk Type)					Hollow Shaft (Key Type)			
	TU1	T1	U1	V1	W1/Depth	Key				TU2	T2	U2	V2	V3	TU4	T4	U4	V4
						X1	Y1	Z1	L1									
9030	330	160	170	80m6	M20/42	22	9	14	150	393	233	160	83	80	330	165	165	75
9035	330	160	170	90m6	M20/42	25	9	14	150	403	243	160	88	85	330	165	165	85
9040	349	179	170	95m6	M24/50	25	9	14	150	448	268	180	98	95	360	180	180	90

Units : mm

Nomenclature

P W A [ ] R 2 - [ ] [ ] - [ ]

Size: 9030, 9035, 9040

Shaft Arrangement: RML, RMR, RMB, LMR, LML, LMB

Low Speed Shaft Type:
- (blank) : Solid Shaft
- T : Hollow shaft (Shrink Disk type)
- K : Hollow shaft (Key type)

Nominal Reduction Ratio

Size	Nominal Reduction Ratio											
	6.3	7.1	8	9	10	11.2	12.5	14	16	18	20	22.4
9030	O	O	O	O	O	O	O	O	O	O		
9035			O	O	O	O	O	O	O	O	O	O
9040	O	O	O	O	O	O	O	O	O	O		

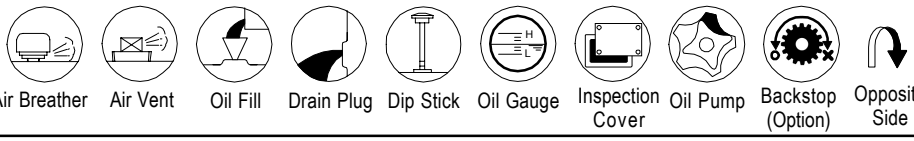

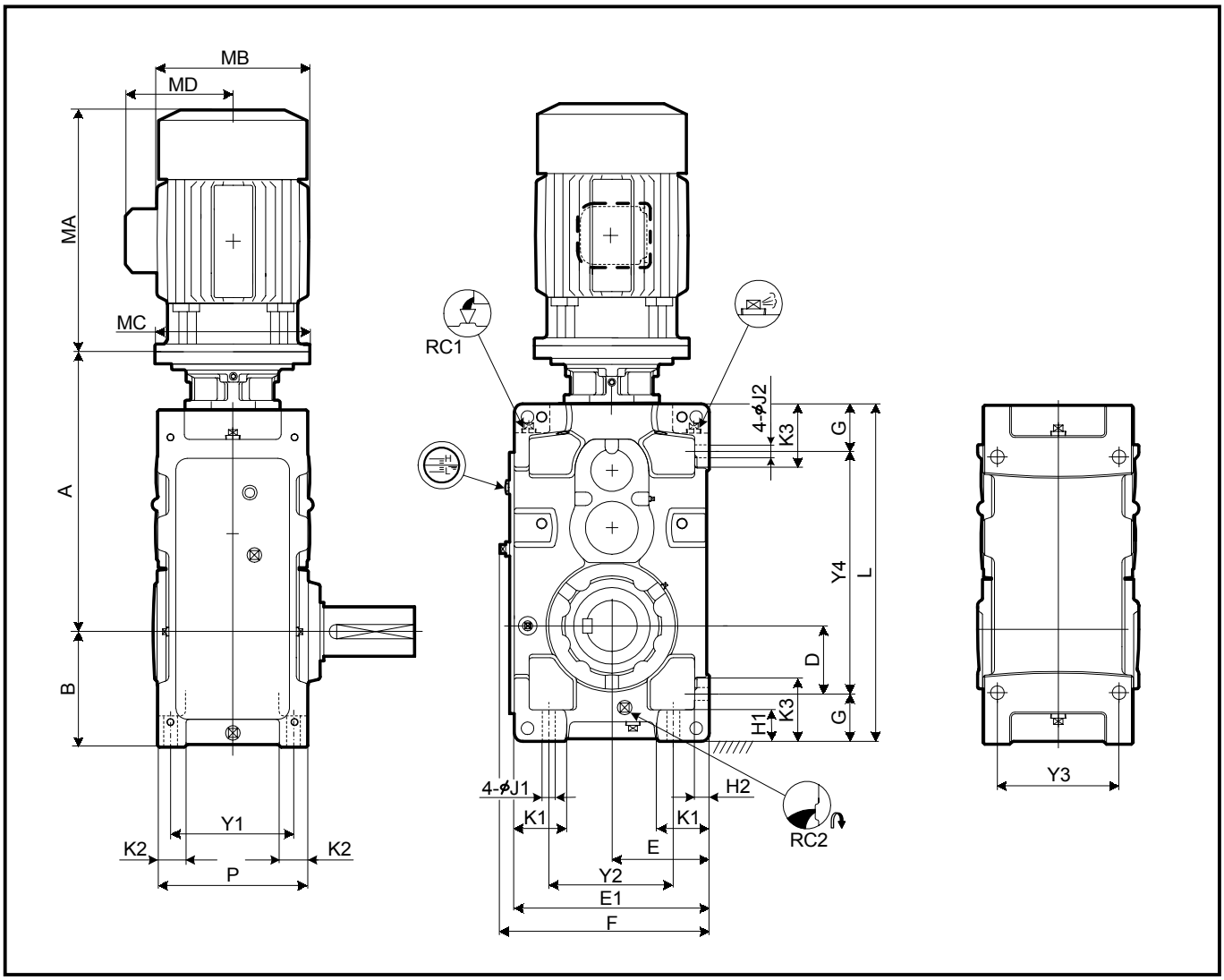

Slow Speed Shaft

Solid Shaft	Hollow Shaft (Shrink Disk Type)	Hollow Shaft (KeyType)
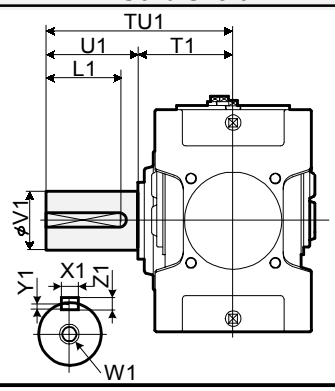	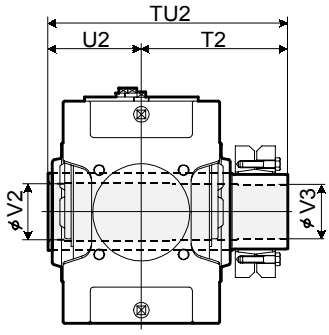	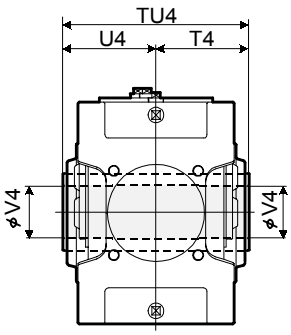
	Refer to the page D-18 for details.	Refer to the page D -19 for details.

Standard Shaft Arrangement Configuration

RML	RMR	RMB	LMR	LML	LMB
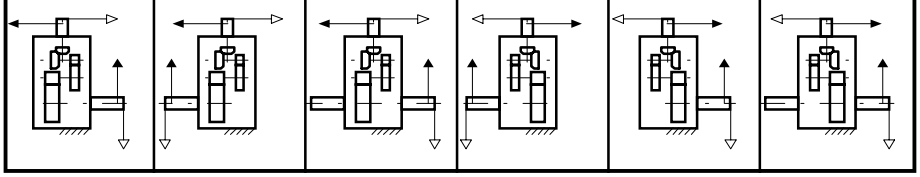					

1.Key and keyways are based on ISO R773-1969 Close keys(JIS B1301-1996 Parallel key in fastening type)
2.The oil quantity is approximate.Oil shall be supplied within the range shown on the oil gauge.
3. Refer to the page D - 12 for dimensions not shown in these drawings.
4. Refer to the page D - 26 for the dimension of optional parts.
5. Refer to the page D - 33 for motor terminal box position.
6. Refer to the page D - 34 for flange dimension.

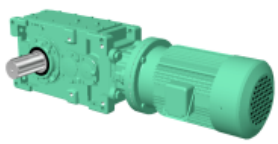

Size	A	B	D	E	E1	F	G	H1	H2	J1	J2	K1	K2	K3	L	P	Y1	Y2	Y3	Y4
9030	See below	200	110	160	320	348	90	60	28	24	24	85	50	120	590	265	215	200	215	410
9035		219	129	185	370	398	90	60	28	24	24	100	50	120	640	265	215	250	215	460
9040		235	120	200	400	430	115	75	30	28	28	100	60	150	685	315	255	260	255	455
9050		255	138.5	210	420	450	116.5	75	32	28	28	110	60	150	775	345	285	280	285	542
9055		286	171	245	490	520	115	75	32	28	28	130	60	150	845	345	285	350	285	615

Size	RC1	RC2	Oil Qty. (L)	Wt. (kg) *)	
				5.5-30kW	37-55kW
9030	3/4"	3/4"	16	240	250
9035	3/4"	3/4"	21	260	270
9040	1"	1"	29	325	345
9050	1"	1"	35	475	485
9055	1"	1"	46	535	545

*) Mass of drive unit with motor, add mass of motor flange and mass of motor, shown in table below.

kW	Motor							A					Mass of Motor Mounting Flange (kg)	Mass of Motor(kg)	
	Without Brake			With Brake			MD	9030	9035	9040	9050	9055		Without Brake	With Brake
	MA	MB	MC	MA	MB	MC									
5.5	382	212	315	454	212	315	144	540	571	595			8	43	54
7.5	415	251	315	510	251	315	185	540	571	595	675	714	8	57	77
11	480	251	350	575	251	350	188	540	571	595	675	714	11	76	96
15	545	324	350	700	324	350	232	540	571	595	675	714	11	131	175
18.5	625	394	400	835	394	400	297	540	571	595	675	714	17	213	258
22	625	394	400	835	394	400	297	540	571	595	675	714	17	213	258
30	625	394	400	835	394	400	297	540	571	595	675	714	17	224	280
37	715.5	394	450	930.5	394	450	297		601	625	705	744	15	259	320
45	715.5	394	450	930.5	394	450	297			625	705	744	15	259	320
55	769.5	484	550	-	-	-	412				705	744	29	276	-

Size	Solid Shaft									Hollow Shaft (Shrink Disk Type)					Hollow Shaft (Key Type)			
	TU1	T1	U1	V1	W1/Depth	Key				TU2	T2	U2	V2	V3	TU4	T4	U4	V4
						X1	Y1	Z1	L1									
9030	330	160	170	80m6	M20/42	22	9	14	150	393	233	160	83	80	330	165	165	75
9035	330	160	170	90m6	M20/42	25	9	14	150	403	243	160	88	85	330	165	165	85
9040	349	179	170	95m6	M24/50	25	9	14	150	448	268	180	98	95	360	180	180	90
9050	411	201	210	110m6	M24/50	28	10	16	190	503	303	200	108	105	410	205	205	105
9055	411	201	210	120m6	M24/50	32	11	18	185	528	323	205	123	120	410	205	205	115

Units : mm

Nomenclature

P W A [ ] R 3 - [ ] [ ] - [ ]

Size: 9030, 9035, 9040, 9050, 9055

Shaft Arrangement: RML, RMR, RMB, LMR, LML, LMB

Low Speed Shaft Type:
- (blank) : Solid Shaft
- T : Hollow shaft (Shrink Disk type)
- K : Hollow shaft (Key type)

Nominal Reduction Ratio

Size	Nominal Reduction Ratio													
	20	22.4	25	28	31.5	35.5	40	45	50	56	63	71	80	90
9030	O	O	O	O	O	O	O	O	O	O	O	O		
9035			O	O	O	O	O	O	O	O		O	O	O
9040	O	O	O	O	O	O	O	O		O	O	O		
9050	O	O	O	O	O	O	O	O	O	O	O	O		
9055			O	O	O	O	O	O	O	O	O	O	O	O

Air Breather

Air Vent

Oil Fill

Drain Plug

Dip Stick

Oil Gauge

Inspection Cover

Oil Pump

Backstop (Option)

Opposite Side

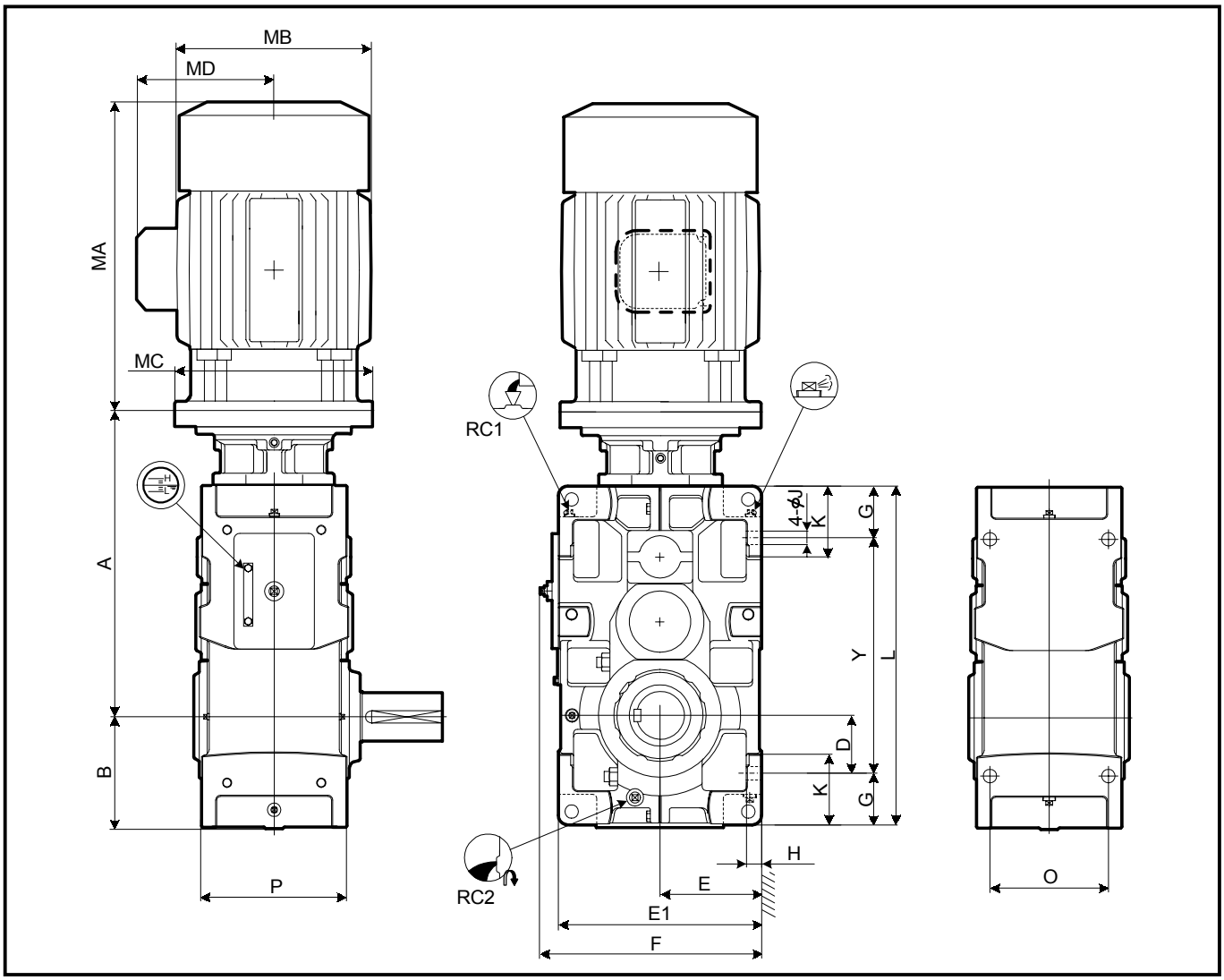

Slow Speed Shaft

Solid Shaft	Hollow Shaft (Shrink Disk Type)	Hollow Shaft (KeyType)
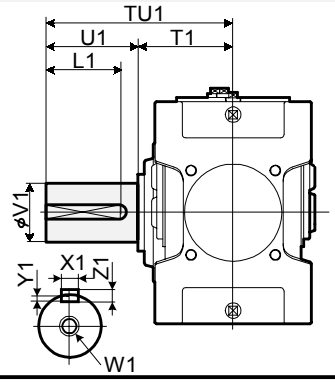	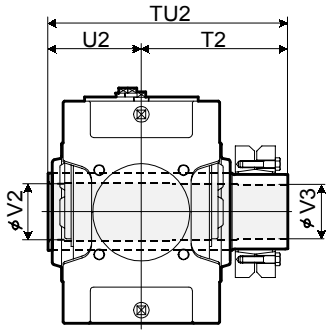 Refer to the page D-18 for details.	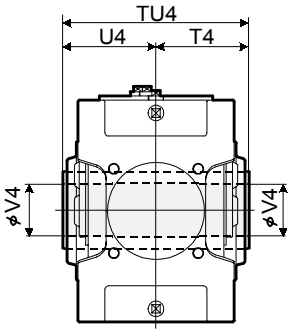 Refer to the page D -19 for details.

Standard Shaft Arrangement Configuration

RML	RMR	RMB	LMR	LML	LMB
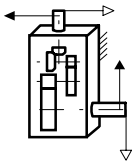	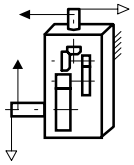	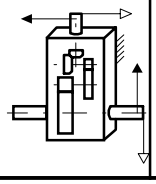	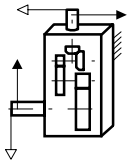	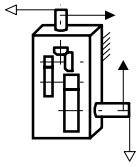	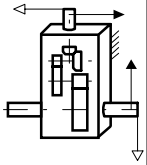

1.Key and keyways are based on ISO R773-1969 Close keys(JIS B1301-1996 Parallel key in fastening type)
2.The oil quantity is approximate.Oil shall be supplied within the range shown on the oil gauge.
3. Refer to the page D - 14 for dimensions not shown in these drawings.
4. Refer to the page D - 29 for the dimension of optional parts.
5. Refer to the page D - 33 for motor terminal box position.
6. Refer to the page D - 34 for flange dimension.

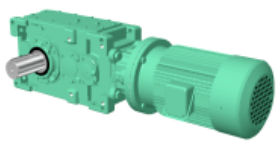

Size	A	B	D	E	E1	F	G	H	J	K	L	O	P	Y
9060	See below	291	151	265	530	577	135	35	35	180	885	310	380	615
9070		328	163	300	600	647	160	40	42	215	1020	350	430	700
9075		375	210	335	670	717	160	52	42	220	1120	350	430	800

Size	RC1	RC2	Oil Qty. (L)	Wt. (kg) *)	
				5.5-30kW	37-55kW
9060	1"	1"	56	680	690
9070	1"	1"	83	950	960
9075	1"	1"	100	1200	1210

*) Mass of drive unit with motor, add mass of motor flange and mass of motor, shown in table below.

kW	Motor							A			Mass of Motor Mounting Flange (kg)	Mass of Motor(kg)	
	Without Brake			With Brake			MD	9060	9070	9075		Without Brake	With Brake
	MA	MB	MC	MA	MB	MC							
11	480	251	350	575	251	350	188	744			11	76	96
15	545	324	350	700	324	350	232	744			11	131	175
18.5	625	394	400	835	394	400	297	744	852	905	17	213	258
22	625	394	400	835	394	400	297	744	852	905	17	213	258
30	625	394	400	835	394	400	297	744	852	905	17	224	280
37	715.5	394	450	930.5	394	450	297	774	882	935	15	259	320
45	715.5	394	450	930.5	394	450	297	774	882	935	15	259	320
55	769.5	484	550	-	-	-	412	774	882	935	29	276	-

Size	Solid Shaft									Hollow Shaft (Shrink Disk Type)					Hollow Shaft (Key Type)			
	TU1	T1	U1	V1	W1/Depth	Key				TU2	T2	U2	V2	V3	TU4	T4	U4	V4
						X1	Y1	Z1	L1									
9060	440	230	210	125m6	M24/50	32	11	18	185	583	353	230	128	125	470	235	235	125
9070	509	259	250	145m6	M30/60	36	12	20	225	644	384	260	148	145	530	265	265	145
9075	562	262	300	160m6	M30/60	40	13	22	275	651	386	265	158	155	530	265	265	155

Units : mm

Nomenclature

P W D [ ] R 3 W - [ ] [ ] - [ ]

- Size: 9060, 9070, 9075
- Shaft Arrangement: RML, RMR, RMB, LMR, LML, LMB
- Low Speed Shaft Type:
  - (blank) : Solid Shaft
  - T : Hollow shaft (Shrink Disk type)
  - K : Hollow shaft (Key type)
- Nominal Reduction Ratio

Size	Nominal Reduction Ratio													
	20	22.4	25	28	31.5	35.5	40	45	50	56	63	71	80	90
9060	O	O	O	O	O	O	O	O	O	O	O	O		
9070	O	O	O	O	O	O	O	O	O	O	O	O		
9075				O	O	O	O	O	O	O	O	O	O	O

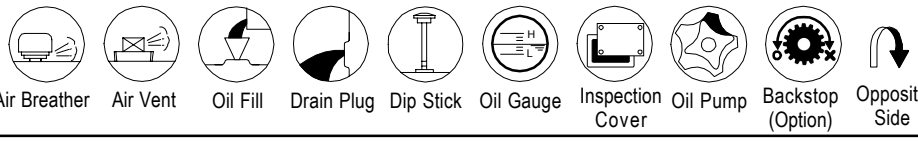

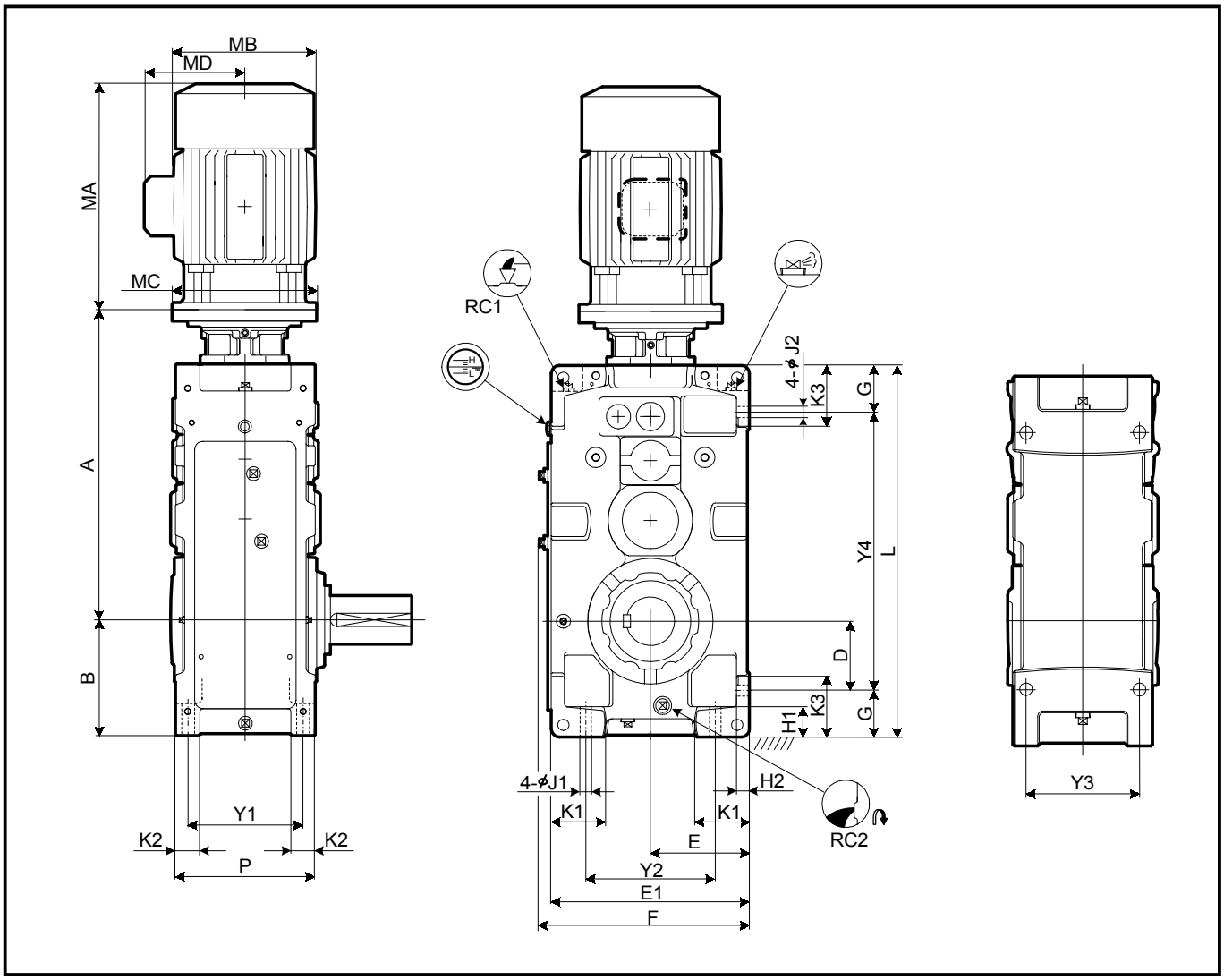

Slow Speed Shaft

Solid Shaft	Hollow Shaft (Shrink Disk Type)	Hollow Shaft (KeyType)
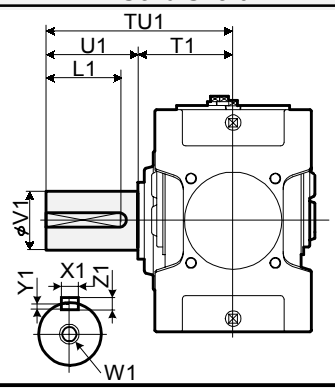	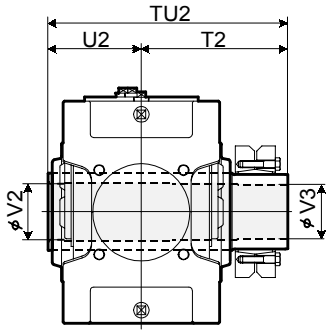 Refer to the page D-18 for details.	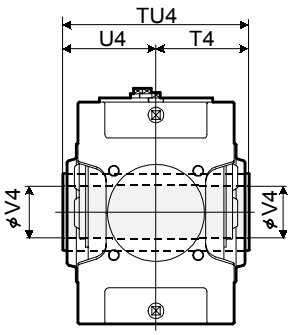 Refer to the page D -19 for details.

Standard Shaft Arrangement Configuration

RML	RMR	RMB	LMR	LML	LMB
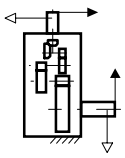	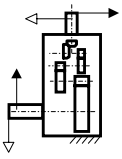	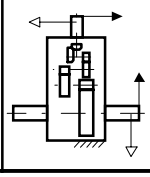	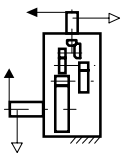	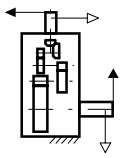	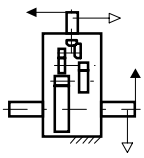

1.Key and keyways are based on ISO R773-1969 Close keys(JIS B1301-1996 Parallel key in fastening type)
2.The oil quantity is approximate.Oil shall be supplied within the range shown on the oil gauge.
3. Refer to the page D - 13 for dimensions not shown in these drawings.
4. Refer to the page D - 26 for the dimension of optional parts.
5. Refer to the page D - 33 for motor terminal box position.
6. Refer to the page D - 34 for flange dimension.

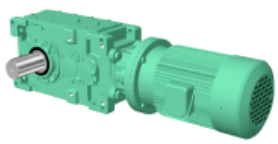

Size	A	B	D	E	E1	F	G	H1	H2	J1	J2	K1	K2	K3	L	P	Y1	Y2	Y3	Y4
9040	See below	235	120	200	400	430	115	75	30	28	28	100	60	150	759	315	255	260	255	529
9050		255	138.5	210	420	450	116.5	75	32	28	28	110	60	150	848	345	285	280	285	615
9055		286	171	245	490	520	115	75	32	28	28	130	60	150	918	345	285	350	285	688

Size	RC1	RC2	Oil Qty. (L)	Wt. (kg) *)	
				5.5-30kW	37-55kW
9040	1"	1"	35	355	365
9050	1"	1"	46	490	500
9055	1"	1"	59	550	560

*) Mass of drive unit with motor, add mass of motor flange and mass of motor, shown in table below.

kW	Motor							A			Mass of Motor Mounting Flange (kg)	Mass of Motor(kg)	
	Without Brake			With Brake			MD	9040	9050	9055		Without Brake	With Brake
	MA	MB	MC	MA	MB	MC							
5.5	382	212	315	454	212	315	144	674	743	782	8	43	54
7.5	415	251	315	510	251	315	185	674	743	782	8	57	77
11	480	251	350	575	251	350	188	674	743	782	11	76	96
15	545	324	350	700	324	350	232	674	743	782	11	131	175
18.5	625	394	400	835	394	400	297	674	743	782	17	213	258
22	625	394	400	835	394	400	297	674	743	782	17	213	258
30	625	394	400	835	394	400	297		743	782	17	224	280

Size	Solid Shaft									Hollow Shaft (Shrink Disk Type)					Hollow Shaft (Key Type)			
	TU1	T1	U1	V1	W1/Depth	Key				TU2	T2	U2	V2	V3	TU4	T4	U4	V4
						X1	Y1	Z1	L1									
9040	349	179	170	95m6	M24/50	25	9	14	150	448	268	180	98	95	360	180	180	90
9050	411	201	210	110m6	M24/50	28	10	16	190	503	303	200	108	105	410	205	205	105
9055	411	201	210	120m6	M24/50	32	11	18	185	528	323	205	123	120	410	205	205	115

Units : mm

Nomenclature

P W A [ ] R 4 - [ ] [ ] - [ ]

Size: 9040, 9050, 9055

Shaft Arrangement: RML, RMR, RMB, LMR, LML, LMB

Low Speed Shaft Type:
- (blank) : Solid Shaft
- T : Hollow shaft (Shrink Disk type)
- K : Hollow shaft (Key type)

Nominal Reduction Ratio

Size	Nominal Reduction Ratio															
	80	90	100	112	125	140	160	180	200	224	250	280	315	355	400	450
9040	O	O	O	O	O	O										
9050	O	O	O	O	O	O	O	O	O	O	O	O	O	O		
9055				O	O	O	O	O	O	O	O	O	O	O	O	O

Air Breather

Air Vent

Oil Fill

Drain Plug

Dip Stick

Oil Gauge

Inspection Cover

Oil Pump

Backstop (Option)

Opposite Side

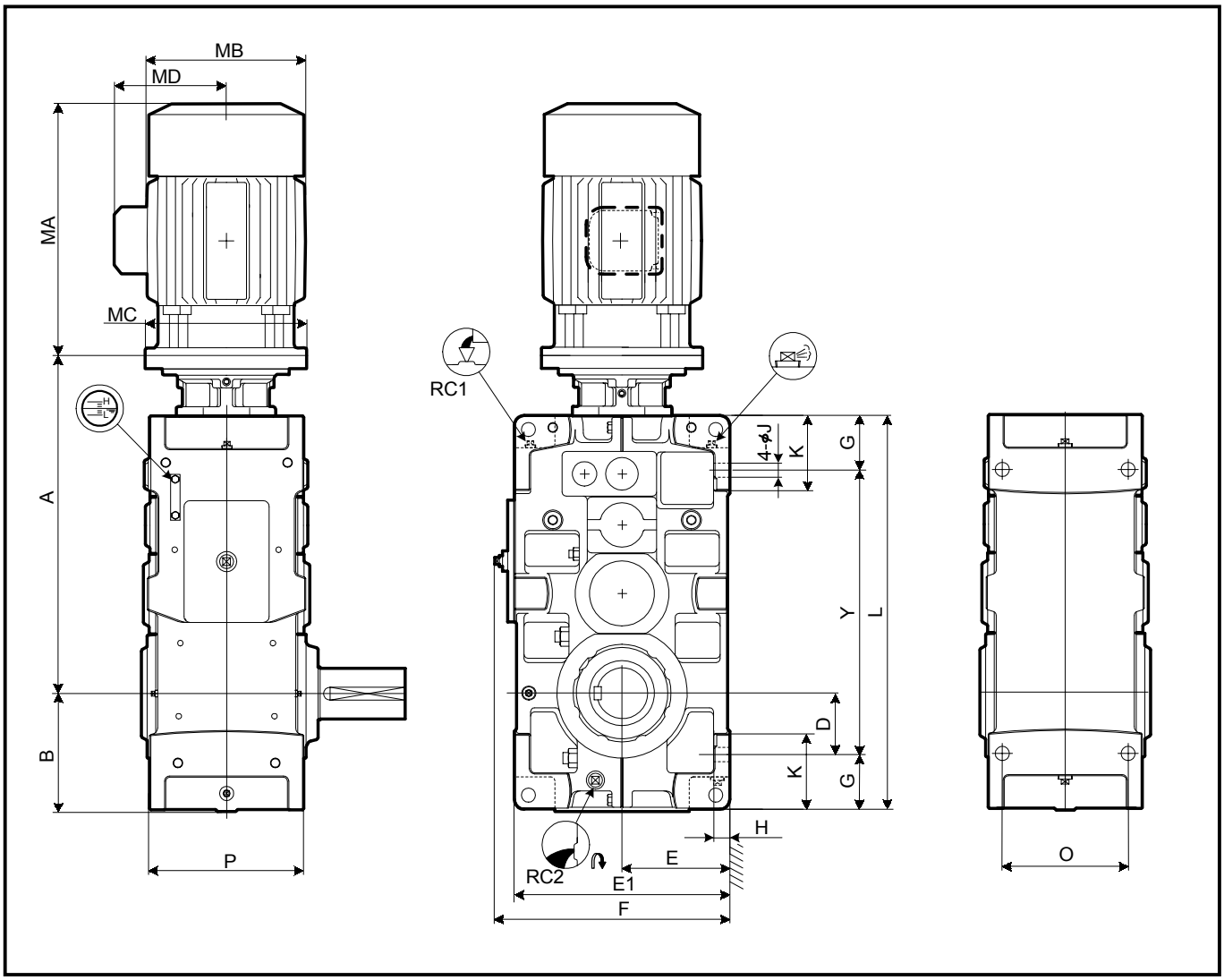

Slow Speed Shaft

Solid Shaft	Hollow Shaft (Shrink Disk Type)	Hollow Shaft (KeyType)
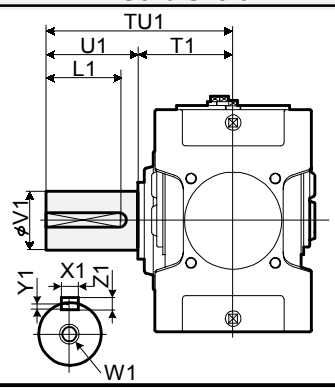	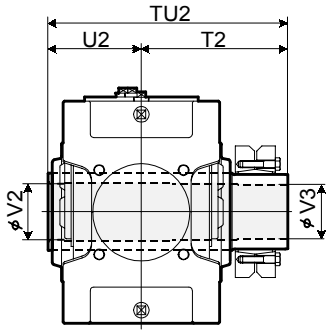 Refer to the page D-18 for details.	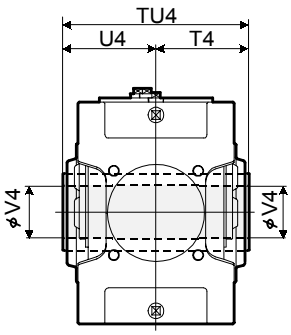 Refer to the page D -19 for details.

Standard Shaft Arrangement Configuration

RML	RMR	RMB	LMR	LML	LMB
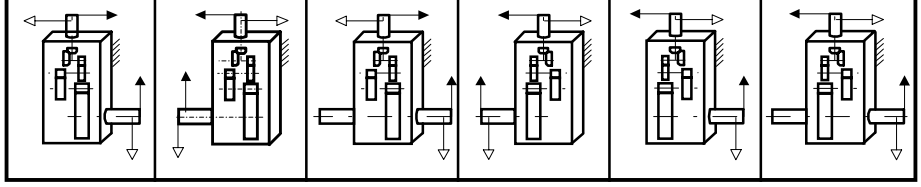					

1.Key and keyways are based on ISO R773-1969 Close keys(JIS B1301-1996 Parallel key in fastening type)
2.The oil quantity is approximate.Oil shall be supplied within the range shown on the oil gauge.
3. Refer to the page D - 15 for dimensions not shown in these drawings.
4. Refer to the page D - 29 for the dimension of optional parts.
5. Refer to the page D - 33 for motor terminal box position.
6. Refer to the page D - 34 for flange dimension.

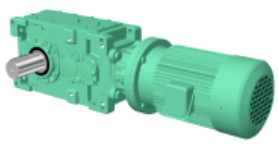

Size	A	B	D	E	E1	F	G	H	J	K	L	O	P	Y
9060	See below	291	151	265	530	577	135	35	35	180	970	310	380	700
9070		328	163	300	600	648	160	40	42	215	1115	350	430	795
9075		375	210	335	670	717	160	52	42	220	1215	350	430	895
9080		370	205	335	670	717	160	52	42	220	1275	380	460	955
9085		414	249	375	750	797	160	52	42	220	1375	380	460	1055

Size	RC1	RC2	Oil Qty. (L)	Wt. (kg) *)	
				5.5-30kW	37-55kW
9060	1"	1"	68	700	710
9070	1"	1"	107	990	1000
9075	1"	1"	122	1210	1220
9080	1"	1"	128	1410	1420
9085	1"	1"	174	1670	1680

*) Mass of drive unit with motor, add mass of motor flange and mass of motor, shown in table below.

kW	Motor							A					Mass of Motor Mounting Flange (kg)	Mass of Motor(kg)	
	Without Brake			With Brake			MD	9060	9070	9075	9080	9085		Without Brake	With Brake
	MA	MB	MC	MA	MB	MC									
5.5	382	212	315	454	212	315	144	829	947	1000	1055	1111	8	43	54
7.5	415	251	315	510	251	315	185	829	947	1000	1055	1111	8	57	77
11	480	251	350	575	251	350	188	829	947	1000	1055	1111	11	76	96
15	545	324	350	700	324	350	232	829	947	1000	1055	1111	11	131	175
18.5	625	394	400	835	394	400	297	829	947	1000	1055	1111	17	213	258
22	625	394	400	835	394	400	297	829	947	1000	1055	1111	17	213	258
30	625	394	400	835	394	400	297	829	947	1000	1055	1111	17	224	280
37	715.5	394	450	930.5	394	450	297	859	977	1030	1085	1141	15	259	320
45	715.5	394	450	930.5	394	450	297	859	977	1030	1085	1141	15	259	320
55	769.5	484	550	-	-	-	412		977	1030	1085	1141	29	276	-

Size	Solid Shaft									Hollow Shaft (Shrink Disk Type)					Hollow Shaft (Key Type)			
	TU1	T1	U1	V1	W1/Depth	Key				TU2	T2	U2	V2	V3	TU4	T4	U4	V4
						X1	Y1	Z1	L1									
9060	440	230	210	125m6	M24/50	32	11	18	185	583	353	230	128	125	470	235	235	125
9070	509	259	250	145m6	M30/60	36	12	20	225	644	384	260	148	145	530	265	265	145
9075	562	262	300	160m6	M30/60	40	13	22	275	651	386	265	158	155	530	265	265	155
9080	582	282	300	165m6	M30/60	40	13	22	275	714	429	285	173	170	570	285	285	165
9085	585	285	300	175m6	M30/60	45	15	25	270	714	429	285	183	180	570	285	285	175

Units : mm

Nomenclature

P W D [ ] R 4 W - [ ] [ ] - [ ]

Size: 9060, 9070, 9075, 9080, 9085

Shaft Arrangement: RML, RMR, RMB, LMR, LML, LMB

Low Speed Shaft Type:
(blank) : Solid Shaft
T : Hollow shaft (Shrink Disk type)
K : Hollow shaft (Key type)

Nominal Reduction Ratio

Size	Nominal Reduction Ratio															
	80	90	100	112	125	140	160	180	200	224	250	280	315	355	400	450
9060		O	O	O	O	O	O	O	O	O	O	O	O	O		
9070	O	O	O	O	O	O	O	O	O	O	O	O	O	O		
9075			O	O	O	O	O	O		O	O	O	O	O	O	O
9080	O	O	O	O	O	O	O	O	O	O	O	O	O	O		
9085			O	O	O	O	O	O	O	O	O	O	O	O	O	O

Air Breather | Air Vent | Oil Fill | Drain Plug | Dip Stick | Oil Gauge | Inspection Cover | Oil Pump | Backstop (Option) | Opposite Side

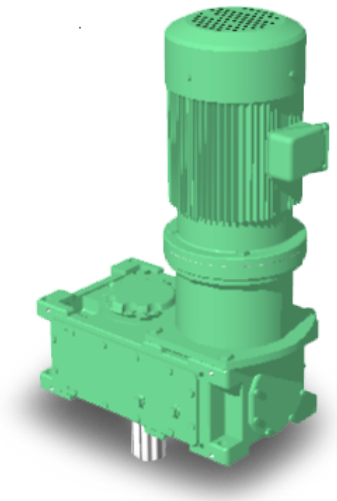

< Drive Unit Parallel Shaft Vertical Mounting >

B

Drive Unit Parallel Shaft

Selection Tables	B- 74
Allowable Radial and Axial Loads	B- 98
Dimension Tables	B-102
Actual ReductionRatio	B-111

Combinations with 4P motor

Shaft Position	High Speed Shaft Speed	Ambient Temperature
Parallel Shaft	1500r/min	40 Degree

kW	SF	Low Speed Shaft Speed (r/min)																		
		238	211	188	167	150	134	120	107	94	83	75	67	60	54	48	42	38	33	30
		Nominal Reduction Ratio																		
		6.3	7.1	8	9	10	11	13	14	16	18	20	22	25	28	32	36	40	45	50
5.5kW 4P	1								9015	9015	9015	9015	9015	9015	9015	9015	9015	9015	9015	9030
	1.25								9015	9015	9015	9015	9015	9015	9015	9015	9015	9015	9015	9030
	1.5								9015	9015	9015	9015	9015	9015	9015	9015	9015	9015	9015	9030
	2								9015	9015	9015	9015	9015	9015	9015	9015	9015	9015	9025	9030
7.5kW 4P	1						9015	9015	9015	9015	9015	9015	9015	9015	9015	9015	9015	9015	9015	9030
	1.25						9015	9015	9015	9015	9015	9015	9015	9015	9015	9015	9015	9015	9025	9030
	1.5						9015	9015	9015	9015	9015	9015	9015	9015	9015	9015	9015	9015	9025	9030
	2						9015	9015	9015	9015	9015	9015	9015	9015	9025	9025	9025	9025	9030	9030
11kW 4P	1		9015	9015	9015	9015	9015	9015	9015	9015	9015	9015	9015	9015	9015	9015	9015	9015	9025	9030
	1.25		9015	9015	9015	9015	9015	9015	9015	9015	9015	9015	9015	9015	9015	9015	9025	9025	9025	9030
	1.5		9015	9015	9015	9015	9015	9015	9015	9015	9015	9015	9015	9015	9025	9025	9025	9025	9030	9030
	2		9015	9015	9015	9015	9015	9015	9015	9015	9025	9015	9025	9025	9025	9030	9030	9030	9030	9035
15kW 4P	1	9015	9015	9015	9015	9015	9015	9015	9015	9015	9015	9015	9015	9015	9025	9025	9025	9025	9030	9030
	1.25	9015	9015	9015	9015	9015	9015	9015	9015	9015	9015	9015	9025	9025	9025	9025	9030	9030	9030	9030
	1.5	9015	9015	9015	9015	9015	9015	9015	9015	9015	9025	9025	9025	9025	9025	9030	9030	9030	9030	9035
	2	9015	9015	9015	9015	9015	9015	9015	9025	9025	9025	9025	9030	9030	9030	9030	9035	9035	9035	9040
18.5kW 4P	1	9015	9015	9015	9015	9015	9015	9015	9015	9015	9015	9025	9025	9025	9025	9025	9030	9030	9030	9030
	1.25	9015	9015	9015	9015	9015	9015	9015	9015	9015	9025	9025	9025	9025	9025	9030	9030	9030	9035	9035
	1.5	9015	9015	9015	9015	9015	9015	9015	9025	9025	9025	9025	9025	9025	9030	9030	9030	9035	9035	9040
	2	9015	9015	9015	9015	9015	9025	9025	9025	9025	9030	9030	9030	9030	9030	9035	9035	9040	9050	9050
22kW 4P	1	9015	9015	9015	9015	9015	9015	9015	9015	9025	9025	9025	9025	9025	9025	9030	9030	9030	9030	9035
	1.25	9015	9015	9015	9015	9015	9015	9015	9025	9025	9025	9025	9025	9025	9030	9030	9030	9035	9035	9040
	1.5	9015	9015	9015	9015	9015	9025	9025	9025	9025	9025	9025	9030	9030	9030	9035	9035	9035	9040	9040
	2	9015	9015	9015	9025	9025	9025	9025	9030	9030	9030	9030	9030	9035	9035	9040	9050	9050	9050	9050
30kW 4P	1	9025	9025	9025	9025	9025	9025	9025	9025	9025	9030	9030	9035	9035	9035	9035	9035	9035	9035	9040
	1.25	9025	9025	9025	9025	9025	9025	9025	9025	9025	9030	9030	9035	9035	9035	9035	9035	9040	9050	9050
	1.5	9025	9025	9025	9025	9025	9025	9025	9030	9030	9030	9030	9035	9035	9035	9040	9050	9050	9050	9050
	2	9025	9025	9025	9025	9025	9030	9030	9030	9030	9035	9035	9040	9040	9050	9050	9050	9050	9055	9055
37kW 4P	1	9025	9030	9030	9030	9030	9030	9030	9030	9030	9035	9035	9035	9040	9040	9040	9040	9040	9050	9050
	1.25	9025	9030	9030	9030	9030	9030	9030	9030	9030	9035	9035	9035	9040	9040	9040	9050	9050	9050	9050
	1.5	9025	9030	9030	9030	9030	9030	9030	9030	9030	9035	9035	9035	9040	9050	9050	9050	9050	9055	9055
	2	9025	9030	9030	9030	9030	9030	9030	9035	9035	9040	9040	9050	9050	9050	9050	9055	9055	9060	9060
45kW 4P	1	9040	9040	9035	9035	9035	9035	9035	9035	9035	9035	9035	9050	9050	9050	9050	9050	9050	9050	9055
	1.25	9040	9040	9035	9035	9035	9035	9035	9035	9035	9035	9035	9050	9050	9050	9050	9050	9050	9055	9055
	1.5	9040	9040	9035	9035	9035	9035	9035	9035	9035	9035	9040	9050	9050	9050	9050	9050	9055	9055	9060
	2	9040	9040	9035	9035	9035	9035	9035	9035	9040	9050	9050	9050	9050	9055	9055	9060	9060	9070	9070
55kW 4P	1	9040	9040	9040	9040	9040	9040	9040	9040	9050	9050	9050	9050	9055	9055	9055	9055	9055	9055	9055
	1.25	9040	9040	9040	9040	9040	9040	9040	9040	9050	9050	9050	9050	9055	9055	9055	9055	9055	9055	9060
	1.5	9040	9040	9040	9040	9040	9040	9040	9040	9050	9050	9050	9050	9055	9055	9055	9055	9055	9070	9060
	2	9040	9040	9040	9040	9040	9040	9040	9050	9050	9050	9050	9055	9055	9055	9060	9070	9070	9070	9070
75kW 4P	1	9050	9050	9055	9055	9055	9055	9055	9055	9055	9055	9055	9055	9070	9070	9070	9070	9070	9070	9070
	1.25	9050	9050	9055	9055	9055	9055	9055	9055	9055	9055	9055	9055	9070	9070	9070	9070	9070	9070	9070
	1.5	9050	9050	9055	9055	9055	9055	9055	9055	9055	9055	9055	9055	9070	9070	9070	9070	9070	9070	9070
	2	9050	9050	9055	9055	9055	9055	9055	9055	9055	9055	9055	9060	9070	9070	9070	9070	9070	9075	9075
90kW 4P	1			9055	9055	9060	9055	9060	9060	9060	9060	9070	9070	9070	9070	9070	9070	9070	9070	9075
	1.25			9055	9055	9060	9055	9060	9060	9060	9060	9070	9070	9070	9070	9070	9070	9070	9070	9075
	1.5			9055	9055	9060	9055	9060	9060	9060	9060	9070	9070	9070	9070	9070	9070	9070	9075	9075
	2			9055	9055	9060	9055	9060	9060	9060	9060	9070	9070	9070	9070	9070	9075	9075	9080	9080
110kW 4P	1						9070	9070	9070	9070	9070	9075	9075	9075	9075	9075	9075	9075	9075	9075
	1.25						9070	9070	9070	9070	9070	9075	9075	9075	9075	9075	9075	9075	9075	9075
	1.5						9070	9070	9070	9070	9070	9075	9075	9075	9075	9075	9075	9075	9075	9075
	2						9070	9070	9070	9070	9070	9075	9075	9075	9075	9075	9075	9080	9085	9085

Size of Reducer

Combinations with 4P motor (1500r/min)

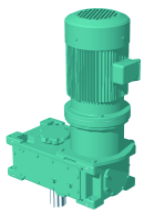

Low Speed Shaft Speed (r/min)					SF	kW
27	24	21	19	17		
Nominal Reduction Ratio						
56	63	71	80	90		
9030	9030	9030	9035	9035	1	5.5kW 4P
9030	9030	9030	9035	9035	1.25	
9030	9030	9030	9035	9035	1.5	
9030	9030	9030	9035	9035	2	
9030	9030	9030	9035	9035	1	7.5kW 4P
9030	9030	9030	9035	9035	1.25	
9030	9030	9030	9035	9035	1.5	
9030	9030	9035	9035	9035	2	
9030	9030	9030	9035	9035	1	11kW 4P
9030	9030	9030	9035	9035	1.25	
9030	9030	9035	9035	9055	1.5	
9035	9040	9040	9055	9055	2	
9030	9030	9035	9035	9035	1	15kW 4P
9035	9035	9035	9055	9055	1.25	
9035	9040	9050	9055	9055	1.5	
9050	9050	9050	9055	9055	2	
9030	9035	9035	9055	9055	1	18.5kW 4P
9035	9040	9050	9055	9055	1.25	
9050	9050	9050	9055	9055	1.5	
9050	9050	9055	9055	9075	2	
9035	9040	9040	9055	9055	1	22kW 4P
9040	9050	9050	9055	9055	1.25	
9050	9050	9055	9055	9055	1.5	
9055	9055	9055	9075	9075	2	
9050	9050	9050	9055	9055	1	30kW 4P
9050	9050	9055	9055	9075	1.25	
9055	9055	9060	9075	9075	1.5	
9060	9060	9070	9075	9075	2	
9050	9050	9055	9055	9075	1	37kW 4P
9055	9055	9060	9075	9075	1.25	
9060	9060	9070	9075	9075	1.5	
9070	9070	9070	9075	9075	2	
9055	9055	9060	9075	9075	1	45kW 4P
9060	9060	9070	9075	9075	1.25	
9070	9070	9070	9075	9075	1.5	
9070	9070	9075	9075	9085	2	
9060	9060	9070	9075	9075	1	55kW 4P
9070	9070	9070	9075	9075	1.25	
9070	9070	9070	9075	9075	1.5	
9075	9075	9080	9085	9085	2	
9070	9070	9070	9075	9075	1	75kW 4P
9070	9070	9075	9075	9085	1.25	
9075	9075	9080	9085	9085	1.5	
9080	9080	9085	9085	9085	2	
9075	9075	9075	9075	9085	1	90kW 4P
9075	9075	9080	9085	9085	1.25	
9075	9080	9085	9085	9085	1.5	
9085	9085	9085	9085	9085	2	
9080	9085	9085	9085	9085	1	110kW 4P
9080	9085	9085	9085	9085	1.25	
9085	9085	9085	9085	9085	1.5	
9085	9085	9085	9085	9085	2	

Combinations with 4P motor

Shaft Position	High Speed Shaft Speed	Ambient Temperature
Parallel Shaft	1800r/min	40 Degree

kW	SF	Low Speed Shaft Speed (r/min)																		
		286	254	225	200	180	161	144	129	113	100	90	80	72	64	57	51	45	40	36
		Nominal Reduction Ratio																		
		6.3	7.1	8	9	10	11.2	12.5	14	16	18	20	22.4	25	28	31.5	35.5	40	45	50
5.5kW 4P	1										9015	9015	9015	9015	9015	9015	9015	9015	9015	9030
	1.25										9015	9015	9015	9015	9015	9015	9015	9015	9015	9030
	1.5										9015	9015	9015	9015	9015	9015	9015	9015	9015	9030
	2										9015	9015	9015	9015	9015	9015	9015	9015	9015	9030
7.5kW 4P	1								9015	9015	9015	9015	9015	9015	9015	9015	9015	9015	9015	9030
	1.25								9015	9015	9015	9015	9015	9015	9015	9015	9015	9015	9015	9030
	1.5								9015	9015	9015	9015	9015	9015	9015	9015	9015	9015	9025	9030
	2								9015	9015	9015	9015	9015	9015	9015	9015	9025	9025	9025	9030
11kW 4P	1				9015	9015	9015	9015	9015	9015	9015	9015	9015	9015	9015	9015	9015	9015	9015	9030
	1.25				9015	9015	9015	9015	9015	9015	9015	9015	9015	9015	9015	9015	9025	9025	9025	9030
	1.5				9015	9015	9015	9015	9015	9015	9015	9015	9015	9015	9015	9015	9025	9025	9025	9030
	2				9015	9015	9015	9015	9015	9015	9015	9015	9025	9025	9025	9025	9030	9030	9030	9030
15kW 4P	1		9015	9015	9015	9015	9015	9015	9015	9015	9015	9015	9015	9015	9015	9015	9025	9025	9025	9030
	1.25		9015	9015	9015	9015	9015	9015	9015	9015	9015	9015	9015	9015	9025	9025	9025	9025	9030	9030
	1.5		9015	9015	9015	9015	9015	9015	9015	9015	9015	9015	9025	9025	9025	9025	9030	9030	9030	9030
	2		9015	9015	9015	9015	9015	9015	9015	9015	9025	9025	9025	9025	9030	9030	9030	9030	9035	9035
18.5kW 4P	1	9015	9015	9015	9015	9015	9015	9015	9015	9015	9015	9025	9025	9025	9025	9025	9025	9025	9030	9030
	1.25	9015	9015	9015	9015	9015	9015	9015	9015	9015	9015	9025	9025	9025	9025	9025	9030	9030	9030	9030
	1.5	9015	9015	9015	9015	9015	9015	9015	9015	9015	9025	9025	9025	9025	9025	9030	9030	9030	9035	9035
	2	9015	9015	9015	9015	9015	9015	9015	9025	9025	9025	9025	9030	9030	9030	9030	9035	9035	9040	9040
22kW 4P	1	9015	9015	9015	9015	9015	9015	9015	9015	9015	9025	9025	9025	9025	9025	9025	9030	9030	9030	9030
	1.25	9015	9015	9015	9015	9015	9015	9015	9015	9015	9025	9025	9025	9025	9025	9030	9030	9030	9030	9035
	1.5	9015	9015	9015	9015	9015	9015	9015	9025	9025	9025	9025	9025	9030	9030	9030	9030	9035	9035	9040
	2	9015	9015	9015	9015	9015	9025	9025	9025	9025	9030	9030	9030	9030	9030	9035	9035	9040	9050	9050
30kW 4P	1	9025	9025	9025	9025	9025	9025	9025	9025	9025	9030	9030	9035	9035	9035	9035	9035	9035	9035	9035
	1.25	9025	9025	9025	9025	9025	9025	9025	9025	9025	9030	9030	9035	9035	9035	9035	9035	9035	9040	9040
	1.5	9025	9025	9025	9025	9025	9025	9025	9025	9025	9030	9030	9035	9035	9035	9035	9035	9040	9050	9050
	2	9025	9025	9025	9025	9025	9025	9025	9030	9030	9030	9030	9035	9035	9040	9040	9050	9050	9050	9050
37kW 4P	1	9030	9030	9030	9030	9030	9030	9030	9030	9030	9030	9035	9035	9035	9040	9040	9040	9040	9040	9040
	1.25	9030	9030	9030	9030	9030	9030	9030	9030	9030	9030	9035	9035	9035	9040	9040	9040	9040	9050	9050
	1.5	9030	9030	9030	9030	9030	9030	9030	9030	9030	9030	9035	9035	9035	9040	9040	9050	9050	9050	9050
	2	9030	9030	9030	9030	9030	9030	9030	9030	9035	9035	9035	9040	9040	9050	9050	9050	9050	9055	9055
45kW 4P	1			9035	9035	9035	9035	9035	9035	9035	9035	9035	9050	9050	9050	9050	9050	9050	9050	9050
	1.25			9035	9035	9035	9035	9035	9035	9035	9035	9035	9050	9050	9050	9050	9050	9050	9050	9050
	1.5			9035	9035	9035	9035	9035	9035	9035	9035	9035	9050	9050	9050	9050	9050	9050	9055	9055
	2			9035	9035	9035	9035	9035	9035	9035	9040	9040	9050	9050	9050	9050	9055	9055	9060	9060
55kW 4P	1	9040	9040	9040	9040	9040	9040	9040	9040	9050	9050	9050	9050	9055	9055	9055	9055	9055	9055	9055
	1.25	9040	9040	9040	9040	9040	9040	9040	9040	9050	9050	9050	9050	9055	9055	9055	9055	9055	9055	9055
	1.5	9040	9040	9040	9040	9040	9040	9040	9040	9050	9050	9050	9050	9055	9055	9055	9055	9055	9055	9060
	2	9040	9040	9040	9040	9040	9040	9040	9040	9050	9050	9050	9050	9055	9055	9055	9060	9060	9070	9070
75kW 4P	1			9055	9055	9055	9055	9055	9055	9055	9055	9055	9055	9070	9070	9070	9070	9070	9070	9070
	1.25			9055	9055	9055	9055	9055	9055	9055	9055	9055	9055	9070	9070	9070	9070	9070	9070	9070
	1.5			9055	9055	9055	9055	9055	9055	9055	9055	9055	9055	9070	9070	9070	9070	9070	9070	9070
	2			9055	9055	9055	9055	9055	9055	9055	9055	9055	9060	9070	9070	9070	9070	9070	9070	9075
90kW 4P	1				9055	9055	9060	9060	9060	9060	9060	9070	9070	9070	9070	9070	9070	9070	9070	9075
	1.25				9055	9055	9060	9060	9060	9060	9060	9070	9070	9070	9070	9070	9070	9070	9070	9075
	1.5				9055	9055	9060	9060	9060	9060	9060	9070	9070	9070	9070	9070	9070	9070	9070	9075
	2				9055	9055	9060	9060	9060	9060	9060	9070	9070	9070	9070	9070	9070	9070	9075	9075
110kW 4P	1							9070	9070	9070	9070	9075	9075	9075	9075	9075	9075	9075	9075	9080
	1.25							9070	9070	9070	9070	9075	9075	9075	9075	9075	9075	9075	9075	9080
	1.5							9070	9070	9070	9070	9075	9075	9075	9075	9075	9075	9075	9075	9080
	2							9070	9070	9070	9070	9075	9075	9075	9075	9075	9075	9075	9080	9085

Size of Reducer

Combinations with 4P motor (1800r/min)

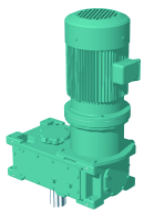

Low Speed Shaft Speed (r/min)					SF	kW
32	29	25	23	20		
Nominal Reduction Ratio						
56	63	71	80	90		
9030	9030	9030	9035	9035	1	5.5kW 4P
9030	9030	9030	9035	9035	1.25	
9030	9030	9030	9035	9035	1.5	
9030	9030	9030	9035	9035	2	
9030	9030	9030	9035	9035	1	7.5kW 4P
9030	9030	9030	9035	9035	1.25	
9030	9030	9030	9035	9035	1.5	
9030	9030	9030	9035	9035	2	
9030	9030	9030	9035	9035	1	11kW 4P
9030	9030	9030	9035	9035	1.25	
9030	9030	9030	9035	9035	1.5	
9030	9035	9035	9055	9055	2	
9030	9030	9030	9035	9035	1	15kW 4P
9030	9030	9035	9035	9035	1.25	
9035	9035	9035	9055	9055	1.5	
9040	9040	9050	9055	9055	2	
9030	9030	9035	9035	9035	1	18.5kW 4P
9035	9035	9035	9055	9055	1.25	
9035	9040	9050	9055	9055	1.5	
9050	9050	9050	9055	9055	2	
9030	9035	9035	9055	9055	1	22kW 4P
9035	9040	9050	9055	9055	1.25	
9040	9050	9050	9055	9055	1.5	
9050	9050	9055	9055	9075	2	
9040	9040	9050	9055	9055	1	30kW 4P
9050	9050	9050	9055	9055	1.25	
9050	9050	9055	9055	9075	1.5	
9055	9055	9060	9075	9075	2	
9050	9050	9050	9055	9055	1	37kW 4P
9050	9050	9055	9055	9075	1.25	
9055	9055	9060	9075	9075	1.5	
9060	9060	9070	9075	9075	2	
9050	9055	9055	9055	9075	1	45kW 4P
9055	9055	9060	9075	9075	1.25	
9060	9060	9070	9075	9075	1.5	
9070	9070	9070	9075	9075	2	
9055	9060	9060	9075	9075	1	55kW 4P
9060	9060	9070	9075	9075	1.25	
9070	9070	9070	9075	9075	1.5	
9070	9070	9075	9075	9085	2	
9070	9070	9070	9075	9075	1	75kW 4P
9070	9070	9070	9075	9075	1.25	
9070	9070	9075	9075	9085	1.5	
9075	9075	9080	9085	9085	2	
9075	9075	9075	9075	9075	1	90kW 4P
9075	9075	9075	9075	9085	1.25	
9075	9075	9080	9085	9085	1.5	
9080	9085	9085	9085	9085	2	
9080	9085	9085	9085	9085	1	110kW 4P
9080	9085	9085	9085	9085	1.25	
9080	9085	9085	9085	9085	1.5	
9085	9085	9085	9085	9085	2	

MOTOR	5.5 kW
	4P

Frequency								Model			Page of Dimension Sheet
50Hz				60Hz							
Output Speed r/min	Output Torque Tout Nm	Output Torque Tout kgf m	S F	Output Speed r/min	Output Torque Tout Nm	Output Torque Tout kgf m	S F	Size	Assembly	Reduction Ratio	Vertical
107	490	50	4.74	129	409	42	5.63	9015	P2	14	B-102
93.8	560	57	4.70	113	467	48	5.63	9015	P2	16	B-102
83.3	630	64	3.83	100	525	54	4.60	9015	P2	18	B-102
75.0	700	72	4.01	90.0	584	60	4.80	9015	P3	20	B-106
67.0	784	80	3.27	80.4	654	67	3.90	9015	P3	22.4	B-106
60.0	875	89	3.23	72.0	730	74	3.89	9015	P3	25	B-106
53.6	980	100	2.63	64.3	817	83	3.16	9015	P3	28	B-106
			4.25				5.09	9025	P3	28	B-106
47.6	1100	113	2.56	57.1	919	94	3.07	9015	P3	31.5	B-106
			3.96				4.74	9025	P3	31.5	B-106
42.3	1240	127	2.09	50.7	1040	106	2.49	9015	P3	35.5	B-106
			3.25				3.89	9025	P3	35.5	B-106
37.5	1400	143	2.07	45.0	1170	119	2.47	9015	P3	40	B-106
			3.21				3.85	9025	P3	40	B-106
			4.63				5.45	9030	P3	40	B-106
33.3	1580	161	1.69	40.0	1310	134	2.01	9015	P3	45	B-106
			2.63				3.16	9025	P3	45	B-106
			4.16				5.00	9030	P3	45	B-106
30.0	1750	179	3.72	36.0	1460	149	4.47	9030	P3	50	B-106
			4.85				5.63	9035	P3	50	B-106
26.8	1960	200	3.36	32.1	1630	167	4.01	9030	P3	56	B-106
			4.41				5.29	9035	P3	56	B-106
23.8	2210	225	3.00	28.6	1840	188	3.58	9030	P3	63	B-106
			3.90				4.67	9035	P3	63	B-106
			4.92				5.81	9040	P3	63	B-106
21.1	2490	254	2.69	25.4	2070	212	3.21	9030	P3	71	B-106
			3.56				4.25	9035	P3	71	B-106
			4.03				4.83	9040	P3	71	B-106
18.8	2800	286	3.12	22.5	2330	238	3.74	9035	P3	80	B-106
16.7	3150	322	2.85	20.0	2630	268	3.41	9035	P3	90	B-106

MOTOR	7.5 kW
	4P

Frequency								Model			Page of Dimension Sheet
50Hz				60Hz							
Output Speed r/min	Output Torque Tout Nm	Output Torque Tout kgf m	S F	Output Speed r/min	Output Torque Tout Nm	Output Torque Tout kgf m	S F	Size	Assembly	Reduction Ratio	Vertical
134	535	55	4.26	161	446	46	5.20	9015	P2	11.2	B-102
120	597	61	4.26	144	497	51	5.06	9015	P2	12.5	B-102
107	669	68	3.48	129	557	57	4.13	9015	P2	14	B-102
93.8	764	78	3.45	113	637	65	4.13	9015	P2	16	B-102
83.3	860	88	2.81	100	716	73	3.37	9015	P2	18	B-102
			4.53				5.46	9025	P2	18	B-102
75.0	955	98	2.94	90.0	796	81	3.52	9015	P3	20	B-106
			4.40				5.20	9025	P3	20	B-106
67.0	1070	109	2.40	80.4	891	91	2.86	9015	P3	22.4	B-106
			3.84				4.53	9025	P3	22.4	B-106
60.0	1190	122	2.37	72.0	995	102	2.85	9015	P3	25	B-106
			3.76				4.26	9025	P3	25	B-106
53.6	1340	137	1.93	64.3	1110	114	2.31	9015	P3	28	B-106
			3.11				3.73	9025	P3	28	B-106
			4.93				5.86	9030	P3	28	B-106

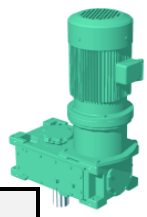

Frequency								Model			Page of Dimension Sheet
50Hz				60Hz							
Output Speed r/min	Output Torque Tout Nm	Output Torque Tout kgf m	S F	Output Speed r/min	Output Torque Tout Nm	Output Torque Tout kgf m	S F	Size	Assembly	Reduction Ratio	Vertical
47.6	1500	154	1.88	57.1	1250	128	2.25	9015	P3	31.5	B-106
			2.90				3.48	9025	P3	31.5	B-106
			4.13				5.06	9030	P3	31.5	B-106
42.3	1700	173	1.53	50.7	1410	144	1.82	9015	P3	35.5	B-106
			2.38				2.85	9025	P3	35.5	B-106
			3.81				4.53	9030	P3	35.5	B-106
37.5	1910	195	1.52	45.0	1590	163	1.81	9015	P3	40	B-106
			2.36				2.82	9025	P3	40	B-106
			3.40				4.00	9030	P3	40	B-106
			4.40				5.20	9035	P3	40	B-106
33.3	2150	219	1.24	40.0	1790	183	1.48	9015	P3	45	B-106
			1.93				2.31	9025	P3	45	B-106
			3.05				3.66	9030	P3	45	B-106
			4.00				4.80	9035	P3	45	B-106
			4.53				5.46	9040	P3	45	B-106
30.0	2390	244	2.73	36.0	1990	203	3.28	9030	P3	50	B-106
			3.56				4.13	9035	P3	50	B-106
			4.40				5.33	9040	P3	50	B-106
26.8	2670	273	2.46	32.1	2230	228	2.94	9030	P3	56	B-106
			3.24				3.88	9035	P3	56	B-106
			3.68				4.40	9040	P3	56	B-106
23.8	3010	307	2.20	28.6	2510	256	2.62	9030	P3	63	B-106
			2.86				3.42	9035	P3	63	B-106
			3.61				4.26	9040	P3	63	B-106
21.1	3390	346	1.97	25.4	2830	288	2.36	9030	P3	71	B-106
			2.61				3.11	9035	P3	71	B-106
			2.96				3.54	9040	P3	71	B-106
			4.26				5.20	9050	P3	71	B-106
18.8	3820	390	2.29	22.5	3180	325	2.74	9035	P3	80	B-106
16.7	4300	439	2.09	20.0	3580	366	2.50	9035	P3	90	B-106
			4.53				5.33	9055	P3	90	B-106

MOTOR	11 kW
	4P

Frequency								Model			Page of Dimension Sheet
50Hz				60Hz							
Output Speed r/min	Output Torque Tout Nm	Output Torque Tout kgf m	S F	Output Speed r/min	Output Torque Tout Nm	Output Torque Tout kgf m	S F	Size	Assembly	Reduction Ratio	Vertical
211	497	51	4.72	254	414	42	5.63	9015	P2	7.1	B-102
188	560	57	4.63	225	467	48	5.54	9015	P2	8	B-102
167	630	64	3.72	200	525	54	4.45	9015	P2	9	B-102
150	700	72	3.63	180	584	60	4.27	9015	P2	10	B-102
134	784	80	2.90	161	654	67	3.54	9015	P2	11.2	B-102
			4.81				5.81	9025	P2	11.2	B-102
120	875	89	2.90	144	730	74	3.45	9015	P2	12.5	B-102
			4.63				5.54	9025	P2	12.5	B-102
107	980	100	2.37	129	817	83	2.81	9015	P2	14	B-102
			3.81				4.54	9025	P2	14	B-102
93.8	1120	114	2.35	113	934	95	2.81	9015	P2	16	B-102
			3.81				4.54	9025	P2	16	B-102
83.3	1260	129	1.91	100	1050	107	2.30	9015	P2	18	B-102
			3.09				3.72	9025	P2	18	B-102
			4.90				5.90	9030	P2	18	B-102
75.0	1400	143	2.00	90.0	1170	119	2.40	9015	P3	20	B-106
			3.00				3.54	9025	P3	20	B-106
			4.63				5.54	9030	P3	20	B-106

Frequency								Model			Page of Dimension Sheet
50Hz				60Hz							
Output Speed r/min	Output Torque Tout Nm	Output Torque Tout kgf m	S F	Output Speed r/min	Output Torque Tout Nm	Output Torque Tout kgf m	S F	Size	Assembly	Reduction Ratio	Vertical
67.0	1570	160	1.63	80.4	1310	133	1.95	9015	P3	22.4	B-106
			2.61				3.09	9025	P3	22.4	B-106
			4.18				5.00	9030	P3	22.4	B-106
60.0	1750	179	1.61	72.0	1460	149	1.94	9015	P3	25	B-106
			2.56				2.90	9025	P3	25	B-106
			3.72				4.45	9030	P3	25	B-106
			4.81				5.81	9035	P3	25	B-106
53.6	1960	200	1.31	64.3	1630	167	1.58	9015	P3	28	B-106
			2.12				2.54	9025	P3	28	B-106
			3.36				4.00	9030	P3	28	B-106
			4.36				5.27	9035	P3	28	B-106
			4.90				5.90	9040	P3	28	B-106
47.6	2210	225	1.28	57.1	1840	188	1.53	9015	P3	31.5	B-106
			1.98				2.37	9025	P3	31.5	B-106
			2.81				3.45	9030	P3	31.5	B-106
			3.81				4.63	9035	P3	31.5	B-106
			4.72				5.72	9040	P3	31.5	B-106
42.3	2490	254	1.04	50.7	2070	212	1.24	9015	P3	35.5	B-106
			1.62				1.94	9025	P3	35.5	B-106
			2.60				3.09	9030	P3	35.5	B-106
			3.54				4.18	9035	P3	35.5	B-106
			3.90				4.63	9040	P3	35.5	B-106
37.5	2800	286	1.03	45.0	2330	238	1.23	9015	P3	40	B-106
			1.60				1.92	9025	P3	40	B-106
			2.31				2.72	9030	P3	40	B-106
			3.00				3.54	9035	P3	40	B-106
			3.81				4.54	9040	P3	40	B-106
33.3	3150	322	0.84	40.0	2630	268	1.00	9015	P3	45	B-106
			1.31				1.58	9025	P3	45	B-106
			2.08				2.50	9030	P3	45	B-106
			2.72				3.27	9035	P3	45	B-106
			3.09				3.72	9040	P3	45	B-106
			4.72				5.63	9050	P3	45	B-106
30.0	3500	358	1.86	36.0	2920	298	2.23	9030	P3	50	B-106
			2.42				2.81	9035	P3	50	B-106
			3.00				3.63	9040	P3	50	B-106
			4.63				5.54	9050	P3	50	B-106
26.8	3920	400	1.68	32.1	3270	334	2.00	9030	P3	56	B-106
			2.20				2.64	9035	P3	56	B-106
			2.50				3.00	9040	P3	56	B-106
			3.81				4.54	9050	P3	56	B-106
			4.90				5.90	9055	P3	56	B-106
23.8	4410	450	1.50	28.6	3680	375	1.79	9030	P3	63	B-106
			1.95				2.33	9035	P3	63	B-106
			2.46				2.90	9040	P3	63	B-106
			3.54				4.27	9050	P3	63	B-106
			5.00				6.00	9055	P3	63	B-106
21.1	4970	508	1.34	25.4	4140	423	1.60	9030	P3	71	B-106
			1.78				2.12	9035	P3	71	B-106
			2.01				2.41	9040	P3	71	B-106
			2.90				3.54	9050	P3	71	B-106
			4.00				4.81	9055	P3	71	B-106
			4.54				5.45	9060	P3	71	B-108
18.8	5600	572	1.56	22.5	4670	477	1.87	9035	P3	80	B-106
			3.81				4.54	9055	P3	80	B-106
16.7	6300	644	1.42	20.0	5250	536	1.70	9035	P3	90	B-106
			3.09				3.63	9055	P3	90	B-106

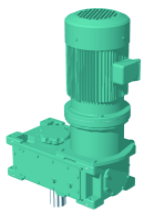

MOTOR	15 kW
	4P

Frequency								Model			Page of Dimension Sheet
50Hz				60Hz							
Output Speed r/min	Output Torque Tout Nm	Output Torque Tout kgf m	S F	Output Speed r/min	Output Torque Tout Nm	Output Torque Tout kgf m	S F	Size	Assembly	Reduction Ratio	Vertical
238	602	61	4.26	286	501	51	5.06	9015	P2	6.3	B-102
211	678	69	3.46	254	565	58	4.13	9015	P2	7.1	B-102
188	764	78	3.40	225	637	65	4.06	9015	P2	8	B-102
167	860	88	2.73	200	716	73	3.26	9015	P2	9	B-102
			4.53				5.40	9025	P2	9	B-102
150	955	98	2.66	180	796	81	3.13	9015	P2	10	B-102
			4.33				5.20	9025	P2	10	B-102
134	1070	109	2.13	161	891	91	2.60	9015	P2	11.2	B-102
			3.53				4.26	9025	P2	11.2	B-102
120	1190	122	2.13	144	995	102	2.53	9015	P2	12.5	B-102
			3.40				4.06	9025	P2	12.5	B-102
			5.00				5.93	9030	P2	12.5	B-102
107	1340	137	1.74	129	1110	114	2.06	9015	P2	14	B-102
			2.80				3.33	9025	P2	14	B-102
			4.46				5.40	9030	P2	14	B-102
93.8	1530	156	1.72	113	1270	130	2.06	9015	P2	16	B-102
			2.80				3.33	9025	P2	16	B-102
			4.00				4.80	9030	P2	16	B-102
83.3	1720	176	1.40	100	1430	146	1.68	9015	P2	18	B-102
			2.26				2.73	9025	P2	18	B-102
			3.60				4.33	9030	P2	18	B-102
			4.73				5.66	9035	P2	18	B-102
75.0	1910	195	1.47	90.0	1590	163	1.76	9015	P3	20	B-106
			2.20				2.60	9025	P3	20	B-106
			3.40				4.06	9030	P3	20	B-106
			4.20				5.00	9035	P2	20	B-102
67.0	2140	218	1.20	80.4	1780	182	1.43	9015	P3	22.4	B-106
			1.92				2.26	9025	P3	22.4	B-106
			3.06				3.66	9030	P3	22.4	B-106
			3.80				4.53	9035	P2	22.4	B-102
			4.46				5.33	9040	P3	22.4	B-106
60.0	2390	244	1.18	72.0	1990	203	1.42	9015	P3	25	B-106
			1.88				2.13	9025	P3	25	B-106
			2.73				3.26	9030	P3	25	B-106
			3.53				4.26	9035	P3	25	B-106
			4.40				5.26	9040	P3	25	B-106
53.6	2670	273	0.96	64.3	2230	228	1.15	9015	P3	28	B-106
			1.55				1.86	9025	P3	28	B-106
			2.46				2.93	9030	P3	28	B-106
			3.20				3.86	9035	P3	28	B-106
			3.60				4.33	9040	P3	28	B-106
47.6	3010	307	0.94	57.1	2510	256	1.12	9015	P3	31.5	B-106
			1.45				1.74	9025	P3	31.5	B-106
			2.06				2.53	9030	P3	31.5	B-106
			2.80				3.40	9035	P3	31.5	B-106
			3.46				4.20	9040	P3	31.5	B-106
42.3	3390	346	1.19	50.7	2830	288	1.42	9025	P3	35.5	B-106
			1.90				2.26	9030	P3	35.5	B-106
			2.60				3.06	9035	P3	35.5	B-106
			2.86				3.40	9040	P3	35.5	B-106
			4.53				5.40	9050	P3	35.5	B-106
37.5	3820	390	1.18	45.0	3180	325	1.41	9025	P3	40	B-106
			1.70				2.00	9030	P3	40	B-106
			2.20				2.60	9035	P3	40	B-106
			2.80				3.33	9040	P3	40	B-106
			4.20				5.00	9050	P3	40	B-106

Frequency 50Hz				Frequency 60Hz				Model			Page of Dimension Sheet
Output Speed r/min	Output Torque Tout Nm	Output Torque Tout kgf m	S F	Output Speed r/min	Output Torque Tout Nm	Output Torque Tout kgf m	S F	Size	Assembly	Reduction Ratio	Vertical
33.3	4300	439	0.96	40.0	3580	366	1.15	9025	P3	45	B-106
			1.52				1.83	9030	P3	45	B-106
			2.00				2.40	9035	P3	45	B-106
			2.26				2.73	9040	P3	45	B-106
			3.46				4.13	9050	P3	45	B-106
			4.73				5.66	9055	P3	45	B-106
30.0	4780	488	1.36	36.0	3980	406	1.64	9030	P3	50	B-106
			1.78				2.06	9035	P3	50	B-106
			2.20				2.66	9040	P3	50	B-106
			3.40				4.06	9050	P3	50	B-106
			4.46				5.40	9055	P3	50	B-106
26.8	5350	546	1.23	32.1	4460	455	1.47	9030	P3	56	B-106
			1.62				1.94	9035	P3	56	B-106
			1.84				2.20	9040	P3	56	B-106
			2.80				3.33	9050	P3	56	B-106
			3.60				4.33	9055	P3	56	B-106
			4.40				5.26	9060	P3	56	B-108
23.8	6020	614	1.10	28.6	5010	512	1.31	9030	P3	63	B-106
			1.43				1.71	9035	P3	63	B-106
			1.80				2.13	9040	P3	63	B-106
			2.60				3.13	9050	P3	63	B-106
			3.66				4.40	9055	P3	63	B-106
			4.26				5.13	9060	P3	63	B-108
21.1	6780	692	0.98	25.4	5650	577	1.18	9030	P3	71	B-106
			1.30				1.55	9035	P3	71	B-106
			1.48				1.77	9040	P3	71	B-106
			2.13				2.60	9050	P3	71	B-106
			2.93				3.53	9055	P3	71	B-106
			3.33				4.00	9060	P3	71	B-108
18.8	7640	780	1.14	22.5	6370	650	1.37	9035	P3	80	B-106
			2.80				3.33	9055	P3	80	B-106
16.7	8600	878	1.04	20.0	7160	731	1.25	9035	P3	90	B-106
			2.26				2.66	9055	P3	90	B-106

MOTOR	18.5 kW
	4P

Frequency 50Hz				Frequency 60Hz				Model			Page of Dimension Sheet
Output Speed r/min	Output Torque Tout Nm	Output Torque Tout kgf m	S F	Output Speed r/min	Output Torque Tout Nm	Output Torque Tout kgf m	S F	Size	Assembly	Reduction Ratio	Vertical
238	742	76	3.45	286	618	63	4.10	9015	P2	6.3	B-102
211	836	85	2.81	254	697	71	3.35	9015	P2	7.1	B-102
			4.48				5.40	9025	P2	7.1	B-102
188	942	96	2.75	225	785	80	3.29	9015	P2	8	B-102
			4.48				5.35	9025	P2	8	B-102
167	1060	108	2.21	200	883	90	2.64	9015	P2	9	B-102
			3.67				4.37	9025	P2	9	B-102
150	1180	120	2.16	180	982	100	2.54	9015	P2	10	B-102
			3.51				4.21	9025	P2	10	B-102
134	1320	135	1.72	161	1100	112	2.10	9015	P2	11.2	B-102
			2.86				3.45	9025	P2	11.2	B-102
			4.64				5.56	9030	P2	11.2	B-102
120	1470	150	1.72	144	1230	125	2.05	9015	P2	12.5	B-102
			2.75				3.29	9025	P2	12.5	B-102
			4.05				4.81	9030	P2	12.5	B-102

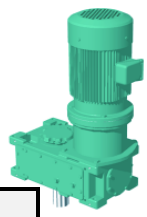

Frequency								Model			Page of Dimension Sheet
50Hz				60Hz							
Output Speed r/min	Output Torque Tout Nm	Output Torque Tout kgf m	S F	Output Speed r/min	Output Torque Tout Nm	Output Torque Tout kgf m	S F	Size	Assembly	Reduction Ratio	Vertical
107	1650	168	1.41	129	1370	140	1.67	9015	P2	14	B-102
			2.27				2.70	9025	P2	14	B-102
			3.62				4.37	9030	P2	14	B-102
			4.91				5.89	9035	P2	14	B-102
93.8	1880	192	1.40	113	1570	160	1.67	9015	P2	16	B-102
			2.27				2.70	9025	P2	16	B-102
			3.24				3.89	9030	P2	16	B-102
			4.21				5.08	9035	P2	16	B-102
83.3	2120	216	1.14	100	1770	180	1.36	9015	P2	18	B-102
			1.83				2.21	9025	P2	18	B-102
			2.91				3.51	9030	P2	18	B-102
			3.83				4.59	9035	P2	18	B-102
			4.32				5.13	9040	P2	18	B-102
75.0	2360	241	1.78	90.0	1960	200	2.10	9025	P3	20	B-106
			2.75				3.29	9030	P3	20	B-106
			3.40				4.05	9035	P2	20	B-102
			4.43				5.29	9040	P3	20	B-106
67.0	2640	269	1.55	80.4	2200	224	1.83	9025	P3	22.4	B-106
			2.48				2.97	9030	P3	22.4	B-106
			3.08				3.67	9035	P2	22.4	B-102
			3.62				4.32	9040	P3	22.4	B-106
60.0	2940	301	1.52	72.0	2450	251	1.72	9025	P3	25	B-106
			2.21				2.64	9030	P3	25	B-106
			2.86				3.45	9035	P3	25	B-106
			3.56				4.27	9040	P3	25	B-106
53.6	3300	337	1.26	64.3	2750	281	1.51	9025	P3	28	B-106
			2.00				2.37	9030	P3	28	B-106
			2.59				3.13	9035	P3	28	B-106
			2.91				3.51	9040	P3	28	B-106
			4.37				5.24	9050	P3	28	B-106
47.6	3710	379	1.17	57.1	3090	316	1.41	9025	P3	31.5	B-106
			1.67				2.05	9030	P3	31.5	B-106
			2.27				2.75	9035	P3	31.5	B-106
			2.81				3.40	9040	P3	31.5	B-106
			4.43				5.29	9050	P3	31.5	B-106
42.3	4180	427	0.96	50.7	3480	356	1.15	9025	P3	35.5	B-106
			1.54				1.83	9030	P3	35.5	B-106
			2.10				2.48	9035	P3	35.5	B-106
			2.32				2.75	9040	P3	35.5	B-106
			3.67				4.37	9050	P3	35.5	B-106
			4.59				5.45	9055	P3	35.5	B-106
37.5	4710	481	0.95	45.0	3930	401	1.14	9025	P3	40	B-106
			1.37				1.62	9030	P3	40	B-106
			1.78				2.10	9035	P3	40	B-106
			2.27				2.70	9040	P3	40	B-106
			3.40				4.05	9050	P3	40	B-106
			4.75				5.67	9055	P3	40	B-106
33.3	5300	541	1.23	40.0	4420	451	1.48	9030	P3	45	B-106
			1.62				1.94	9035	P3	45	B-106
			1.83				2.21	9040	P3	45	B-106
			2.81				3.35	9050	P3	45	B-106
			3.83				4.59	9055	P3	45	B-106
			4.43				5.29	9060	P3	45	B-108
30.0	5890	601	1.10	36.0	4910	501	1.32	9030	P3	50	B-106
			1.44				1.67	9035	P3	50	B-106
			1.78				2.16	9040	P3	50	B-106
			2.75				3.29	9050	P3	50	B-106
			3.62				4.37	9055	P3	50	B-106
			4.54				5.40	9060	P3	50	B-108

Frequency 50Hz				Frequency 60Hz				Model			Page of Dimension Sheet
Output Speed r/min	Output Torque Tout Nm	Output Torque Tout kgf m	S F	Output Speed r/min	Output Torque Tout Nm	Output Torque Tout kgf m	S F	Size	Assembly	Reduction Ratio	Vertical
26.8	6600	673	1.00	32.1	5500	561	1.19	9030	P3	56	B-106
			1.31				1.57	9035	P3	56	B-106
			1.49				1.78	9040	P3	56	B-106
			2.27				2.70	9050	P3	56	B-106
			2.91				3.51	9055	P3	56	B-106
			3.56				4.27	9060	P3	56	B-108
23.8	7420	758	0.89	28.6	6180	631	1.06	9030	P3	63	B-106
			1.16				1.38	9035	P3	63	B-106
			1.46				1.72	9040	P3	63	B-106
			2.10				2.54	9050	P3	63	B-106
			2.97				3.56	9055	P3	63	B-106
			3.45				4.16	9060	P3	63	B-108
21.1	8360	854	1.05	25.4	6970	711	1.26	9035	P3	71	B-106
			1.20				1.43	9040	P3	71	B-106
			1.72				2.10	9050	P3	71	B-106
			2.37				2.86	9055	P3	71	B-106
			2.70				3.24	9060	P3	71	B-108
			4.48				5.35	9070	P3	71	B-108
18.8	9420	962	0.92	22.5	7850	802	1.11	9035	P3	80	B-106
			2.27				2.70	9055	P3	80	B-106
16.7	10600	1080	0.84	20.0	8830	902	1.01	9035	P3	90	B-106
			1.83				2.16	9055	P3	90	B-106
			4.75				5.67	9075	P3	90	B-108

MOTOR	22 kW
	4P

Frequency 50Hz				Frequency 60Hz				Model			Page of Dimension Sheet
Output Speed r/min	Output Torque Tout Nm	Output Torque Tout kgf m	S F	Output Speed r/min	Output Torque Tout Nm	Output Torque Tout kgf m	S F	Size	Assembly	Reduction Ratio	Vertical
238	882	90	2.90	286	735	75	3.45	9015	P2	6.3	B-102
			4.63				5.54	9025	P2	6.3	B-102
211	994	102	2.36	254	829	85	2.81	9015	P2	7.1	B-102
			3.77				4.54	9025	P2	7.1	B-102
188	1120	114	2.31	225	934	95	2.77	9015	P2	8	B-102
			3.77				4.50	9025	P2	8	B-102
167	1260	129	1.86	200	1050	107	2.22	9015	P2	9	B-102
			3.09				3.68	9025	P2	9	B-102
			4.77				5.72	9030	P2	9	B-102
150	1400	143	1.81	180	1170	119	2.13	9015	P2	10	B-102
			2.95				3.54	9025	P2	10	B-102
			4.36				5.22	9030	P2	10	B-102
134	1570	160	1.45	161	1310	133	1.77	9015	P2	11.2	B-102
			2.40				2.90	9025	P2	11.2	B-102
			3.90				4.68	9030	P2	11.2	B-102
120	1750	179	1.45	144	1460	149	1.72	9015	P2	12.5	B-102
			2.31				2.77	9025	P2	12.5	B-102
			3.40				4.04	9030	P2	12.5	B-102
			4.54				5.45	9035	P2	12.5	B-102
107	1960	200	1.18	129	1630	167	1.40	9015	P2	14	B-102
			1.90				2.27	9025	P2	14	B-102
			3.04				3.68	9030	P2	14	B-102
			4.13				4.95	9035	P2	14	B-102
			4.50				5.36	9040	P2	14	B-102

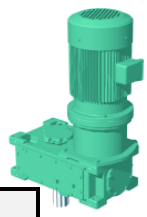

Frequency								Model			Page of Dimension Sheet
50Hz				60Hz							
Output Speed r/min	Output Torque Tout Nm	Output Torque Tout kgf m	S F	Output Speed r/min	Output Torque Tout Nm	Output Torque Tout kgf m	S F	Size	Assembly	Reduction Ratio	Vertical
93.8	2240	229	1.17	113	1870	191	1.40	9015	P2	16	B-102
			1.90				2.27	9025	P2	16	B-102
			2.72				3.27	9030	P2	16	B-102
			3.54				4.27	9035	P2	16	B-102
			4.40				5.27	9040	P2	16	B-102
83.3	2520	257	1.54	100	2100	215	1.86	9025	P2	18	B-102
			2.45				2.95	9030	P2	18	B-102
			3.22				3.86	9035	P2	18	B-102
			3.63				4.31	9040	P2	18	B-102
75.0	2800	286	1.50	90.0	2330	238	1.77	9025	P3	20	B-106
			2.31				2.77	9030	P3	20	B-106
			2.86				3.40	9035	P2	20	B-102
			3.72				4.45	9040	P3	20	B-106
67.0	3140	320	1.30	80.4	2610	267	1.54	9025	P3	22.4	B-106
			2.09				2.50	9030	P3	22.4	B-106
			2.59				3.09	9035	P2	22.4	B-102
			3.04				3.63	9040	P3	22.4	B-106
			4.81				5.77	9050	P3	22.4	B-106
60.0	3500	358	1.28	72.0	2920	298	1.45	9025	P3	25	B-106
			1.86				2.22	9030	P3	25	B-106
			2.40				2.90	9035	P3	25	B-106
			3.00				3.59	9040	P3	25	B-106
			4.45				5.36	9050	P3	25	B-106
53.6	3920	400	1.06	64.3	3270	334	1.27	9025	P3	28	B-106
			1.68				2.00	9030	P3	28	B-106
			2.18				2.63	9035	P3	28	B-106
			2.45				2.95	9040	P3	28	B-106
			3.68				4.40	9050	P3	28	B-106
47.6	4410	450	0.99	57.1	3680	375	1.18	9025	P3	31.5	B-106
			1.40				1.72	9030	P3	31.5	B-106
			1.90				2.31	9035	P3	31.5	B-106
			2.36				2.86	9040	P3	31.5	B-106
			3.72				4.45	9050	P3	31.5	B-106
			4.77				5.72	9055	P3	31.5	B-106
42.3	4970	508	1.30	50.7	4140	423	1.54	9030	P3	35.5	B-106
			1.77				2.09	9035	P3	35.5	B-106
			1.95				2.31	9040	P3	35.5	B-106
			3.09				3.68	9050	P3	35.5	B-106
			3.86				4.59	9055	P3	35.5	B-106
			4.86				5.81	9060	P3	35.5	B-108
37.5	5600	572	1.15	45.0	4670	477	1.36	9030	P3	40	B-106
			1.50				1.77	9035	P3	40	B-106
			1.90				2.27	9040	P3	40	B-106
			2.86				3.40	9050	P3	40	B-106
			4.00				4.77	9055	P3	40	B-106
			4.72				5.68	9060	P3	40	B-108
33.3	6300	644	1.04	40.0	5250	536	1.25	9030	P3	45	B-106
			1.36				1.63	9035	P3	45	B-106
			1.54				1.86	9040	P3	45	B-106
			2.36				2.81	9050	P3	45	B-106
			3.22				3.86	9055	P3	45	B-106
			3.72				4.45	9060	P3	45	B-108
30.0	7000	715	0.93	36.0	5840	596	1.11	9030	P3	50	B-106
			1.21				1.40	9035	P3	50	B-106
			1.50				1.81	9040	P3	50	B-106
			2.31				2.77	9050	P3	50	B-106
			3.04				3.68	9055	P3	50	B-106
			3.81				4.54	9060	P3	50	B-108

Frequency								Model			Page of Dimension Sheet
50Hz				60Hz							
Output Speed r/min	Output Torque Tout Nm	Output Torque Tout kgf m	S F	Output Speed r/min	Output Torque Tout Nm	Output Torque Tout kgf m	S F	Size	Assembly	Reduction Ratio	Vertical
26.8	7840	801	0.84	32.1	6540	667	1.00	9030	P3	56	B-106
			1.10				1.32	9035	P3	56	B-106
			1.25				1.50	9040	P3	56	B-106
			1.90				2.27	9050	P3	56	B-106
			2.45				2.95	9055	P3	56	B-106
			3.00				3.59	9060	P3	56	B-108
			4.68				5.59	9070	P3	56	B-108
23.8	8820	901	0.97	28.6	7350	751	1.16	9035	P3	63	B-106
			1.23				1.45	9040	P3	63	B-106
			1.77				2.13	9050	P3	63	B-106
			2.50				3.00	9055	P3	63	B-106
			2.90				3.50	9060	P3	63	B-108
			4.50				5.40	9070	P3	63	B-108
21.1	9940	1020	0.89	25.4	8290	846	1.06	9035	P3	71	B-106
			1.00				1.20	9040	P3	71	B-106
			1.45				1.77	9050	P3	71	B-106
			2.00				2.40	9055	P3	71	B-106
			2.27				2.72	9060	P3	71	B-108
			3.77				4.50	9070	P3	71	B-108
			4.95				5.95	9075	P3	71	B-108
18.8	11210	1140	1.90	22.5	9340	953	2.27	9055	P3	80	B-106
			4.77				5.68	9075	P3	80	B-108
16.7	12610	1290	1.54	20.0	10510	1070	1.81	9055	P3	90	B-106
			4.00				4.77	9075	P3	90	B-108

MOTOR	30 kW
	4P

Frequency								Model			Page of Dimension Sheet
50Hz				60Hz							
Output Speed r/min	Output Torque Tout Nm	Output Torque Tout kgf m	S F	Output Speed r/min	Output Torque Tout Nm	Output Torque Tout kgf m	S F	Size	Assembly	Reduction Ratio	Vertical
238	1200	123	3.40	286	1000	102	4.06	9025	P2	6.3	B-102
			4.96				5.96	9030	P2	6.3	B-102
211	1360	138	2.76	254	1130	115	3.33	9025	P2	7.1	B-102
			4.50				5.36	9030	P2	7.1	B-102
188	1530	156	2.76	225	1270	130	3.30	9025	P2	8	B-102
			3.90				4.66	9030	P2	8	B-102
167	1720	176	2.26	200	1430	146	2.70	9025	P2	9	B-102
			3.50				4.20	9030	P2	9	B-102
			4.73				5.66	9035	P2	9	B-102
150	1910	195	2.16	180	1590	163	2.60	9025	P2	10	B-102
			3.20				3.83	9030	P2	10	B-102
			4.06				4.86	9035	P2	10	B-102
134	2140	218	1.76	161	1780	182	2.13	9025	P2	11.2	B-102
			2.86				3.43	9030	P2	11.2	B-102
			3.70				4.43	9035	P2	11.2	B-102
			4.30				5.13	9040	P2	11.2	B-102
120	2390	244	1.70	144	1990	203	2.03	9025	P2	12.5	B-102
			2.50				2.96	9030	P2	12.5	B-102
			3.33				4.00	9035	P2	12.5	B-102
			4.03				4.83	9040	P2	12.5	B-102
107	2670	273	1.40	129	2230	228	1.66	9025	P2	14	B-102
			2.23				2.70	9030	P2	14	B-102
			3.03				3.63	9035	P2	14	B-102
			3.30				3.93	9040	P2	14	B-102

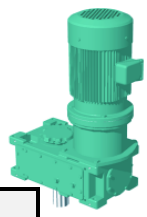

Frequency								Model			Page of Dimension Sheet
50Hz				60Hz							
Output Speed r/min	Output Torque Tout Nm	Output Torque Tout kgf m	S F	Output Speed r/min	Output Torque Tout Nm	Output Torque Tout kgf m	S F	Size	Assembly	Reduction Ratio	Vertical
93.8	3060	312	1.40	113	2550	260	1.66	9025	P2	16	B-102
			2.00				2.40	9030	P2	16	B-102
			2.60				3.13	9035	P2	16	B-102
			3.23				3.86	9040	P2	16	B-102
			4.73				5.66	9050	P2	16	B-102
83.3	3440	351	1.80	100	2870	293	2.16	9030	P2	18	B-102
			2.36				2.83	9035	P2	18	B-102
			2.66				3.16	9040	P2	18	B-102
			3.90				4.66	9050	P2	18	B-102
75.0	3820	390	1.70	90.0	3180	325	2.03	9030	P3	20	B-106
			2.10				2.50	9035	P2	20	B-102
			2.73				3.26	9040	P3	20	B-106
			4.30				5.13	9050	P3	20	B-106
67.0	4280	437	1.90	80.4	3570	364	2.26	9035	P2	22.4	B-102
			2.23				2.66	9040	P3	22.4	B-106
			3.53				4.23	9050	P3	22.4	B-106
			4.06				4.86	9055	P2	22.4	B-102
60.0	4780	488	1.76	72.0	3980	406	2.13	9035	P3	25	B-106
			2.20				2.63	9040	P3	25	B-106
			3.26				3.93	9050	P3	25	B-106
			4.59				5.50	9055	P3	25	B-106
53.6	5350	546	1.60	64.3	4460	455	1.93	9035	P3	28	B-106
			1.80				2.16	9040	P3	28	B-106
			2.70				3.23	9050	P3	28	B-106
			3.70				4.40	9055	P3	28	B-106
			4.30				5.13	9060	P3	28	B-108
47.6	6020	614	1.40	57.1	5010	512	1.70	9035	P3	31.5	B-106
			1.73				2.10	9040	P3	31.5	B-106
			2.73				3.26	9050	P3	31.5	B-106
			3.50				4.20	9055	P3	31.5	B-106
			4.53				5.43	9060	P3	31.5	B-108
42.3	6780	692	1.30	50.7	5650	577	1.53	9035	P3	35.5	B-106
			1.43				1.70	9040	P3	35.5	B-106
			2.26				2.70	9050	P3	35.5	B-106
			2.83				3.36	9055	P3	35.5	B-106
			3.56				4.26	9060	P3	35.5	B-108
37.5	7640	780	1.10	45.0	6370	650	1.30	9035	P3	40	B-106
			1.40				1.66	9040	P3	40	B-106
			2.10				2.50	9050	P3	40	B-106
			2.93				3.50	9055	P3	40	B-106
			3.46				4.16	9060	P3	40	B-108
33.3	8600	878	1.00	40.0	7160	731	1.20	9035	P3	45	B-106
			1.13				1.36	9040	P3	45	B-106
			1.73				2.06	9050	P3	45	B-106
			2.36				2.83	9055	P3	45	B-106
			2.73				3.26	9060	P3	45	B-108
			4.46				5.33	9070	P3	45	B-108
30.0	9550	975	0.89	36.0	7960	813	1.03	9035	P3	50	B-106
			1.10				1.33	9040	P3	50	B-106
			1.70				2.03	9050	P3	50	B-106
			2.23				2.70	9055	P3	50	B-106
			2.80				3.33	9060	P3	50	B-108
			4.13				4.93	9070	P3	50	B-108
26.8	10700	1090	0.92	32.1	8910	910	1.10	9040	P3	56	B-106
			1.40				1.66	9050	P3	56	B-106
			1.80				2.16	9055	P3	56	B-106
			2.20				2.63	9060	P3	56	B-108
			3.43				4.09	9070	P3	56	B-108
			4.73				5.66	9075	P3	56	B-108

Frequency 50Hz Output Speed r/min	Output Torque Tout Nm	Output Torque Tout kgf m	S F	Frequency 60Hz Output Speed r/min	Output Torque Tout Nm	Output Torque Tout kgf m	S F	Model Size	Assembly	Reduction Ratio	Page of Dimension Sheet Vertical
23.8	12030	1230	0.90	28.6	10030	1020	1.06	9040	P3	63	B-106
			1.30				1.56	9050	P3	63	B-106
			1.83				2.20	9055	P3	63	B-106
			2.13				2.56	9060	P3	63	B-108
			3.30				3.96	9070	P3	63	B-108
			4.36				5.20	9075	P3	63	B-108
			5.00				5.96	9080	P3	63	B-108
21.1	13560	1380	1.06	25.4	11300	1150	1.30	9050	P3	71	B-106
			1.46				1.76	9055	P3	71	B-106
			1.66				2.00	9060	P3	71	B-108
			2.76				3.30	9070	P3	71	B-108
			3.63				4.36	9075	P3	71	B-108
			4.33				5.16	9080	P3	71	B-108
18.8	15280	1560	1.40	22.5	12730	1300	1.66	9055	P3	80	B-106
			3.50				4.16	9075	P3	80	B-108
16.7	17190	1760	1.13	20.0	14330	1460	1.33	9055	P3	90	B-106
			2.93				3.50	9075	P3	90	B-108
			4.53				5.40	9085	P3	90	B-108

MOTOR	37 kW
	4P

Frequency 50Hz Output Speed r/min	Output Torque Tout Nm	Output Torque Tout kgf m	S F	Frequency 60Hz Output Speed r/min	Output Torque Tout Nm	Output Torque Tout kgf m	S F	Model Size	Assembly	Reduction Ratio	Page of Dimension Sheet Vertical
238	1480	152	2.75	286	1240	126	3.29	9025	P2	6.3	B-102
			4.02				4.83	9030	P2	6.3	B-102
211	1670	171	3.64	254	1390	142	4.35	9030	P2	7.1	B-102
188	1880	192	3.16	225	1570	160	3.78	9030	P2	8	B-102
			4.21				5.05	9035	P2	8	B-102
167	2120	216	2.83	200	1770	180	3.40	9030	P2	9	B-102
			3.83				4.59	9035	P2	9	B-102
			4.27				5.08	9040	P2	9	B-102
150	2360	241	2.59	180	1960	200	3.10	9030	P2	10	B-102
			3.29				3.94	9035	P2	10	B-102
			4.27				5.08	9040	P2	10	B-102
134	2640	269	2.32	161	2200	224	2.78	9030	P2	11.2	B-102
			3.00				3.59	9035	P2	11.2	B-102
			3.48				4.16	9040	P2	11.2	B-102
120	2940	301	2.02	144	2450	251	2.40	9030	P2	12.5	B-102
			2.70				3.24	9035	P2	12.5	B-102
			3.27				3.91	9040	P2	12.5	B-102
			5.00				6.00	9050	P2	12.5	B-102
107	3300	337	1.81	129	2750	281	2.18	9030	P2	14	B-102
			2.45				2.94	9035	P2	14	B-102
			2.67				3.18	9040	P2	14	B-102
			4.13				4.94	9050	P2	14	B-102
93.8	3770	385	1.62	113	3140	321	1.94	9030	P2	16	B-102
			2.10				2.54	9035	P2	16	B-102
			2.62				3.13	9040	P2	16	B-102
			3.83				4.59	9050	P2	16	B-102
83.3	4240	433	1.45	100	3530	361	1.75	9030	P2	18	B-102
			1.91				2.29	9035	P2	18	B-102
			2.16				2.56	9040	P2	18	B-102
			3.16				3.78	9050	P2	18	B-102
			4.29				5.16	9055	P2	18	B-102
			5.00				6.00	9060	P2	18	B-104

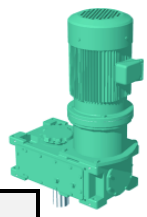

Frequency								Model			Page of Dimension Sheet
50Hz				60Hz							
Output Speed r/min	Output Torque Tout Nm	Output Torque Tout kgf m	S F	Output Speed r/min	Output Torque Tout Nm	Output Torque Tout kgf m	S F	Size	Assembly	Reduction Ratio	Vertical
75.0	4710	481	1.70	90.0	3930	401	2.02	9035	P2	20	B-102
			2.21				2.64	9040	P3	20	B-106
			3.48				4.16	9050	P3	20	B-106
			4.10				4.91	9055	P2	20	B-102
67.0	5280	539	1.54	80.4	4400	449	1.83	9035	P2	22.4	B-102
			1.81				2.16	9040	P3	22.4	B-106
			2.86				3.43	9050	P3	22.4	B-106
			3.29				3.94	9055	P2	22.4	B-102
			4.54				5.43	9060	P3	22.4	B-108
60.0	5890	601	1.43	72.0	4910	501	1.72	9035	P3	25	B-106
			1.78				2.13	9040	P3	25	B-106
			2.64				3.18	9050	P3	25	B-106
			3.72				4.45	9055	P3	25	B-106
			4.40				5.27	9060	P3	25	B-108
53.6	6600	673	1.45	64.3	5500	561	1.75	9040	P3	28	B-106
			2.18				2.62	9050	P3	28	B-106
			3.00				3.56	9055	P3	28	B-106
			3.48				4.16	9060	P3	28	B-108
47.6	7420	758	1.40	57.1	6180	631	1.70	9040	P3	31.5	B-106
			2.21				2.64	9050	P3	31.5	B-106
			2.83				3.40	9055	P3	31.5	B-106
			3.67				4.40	9060	P3	31.5	B-108
42.3	8360	854	1.16	50.7	6970	711	1.37	9040	P3	35.5	B-106
			1.83				2.18	9050	P3	35.5	B-106
			2.29				2.72	9055	P3	35.5	B-106
			2.89				3.45	9060	P3	35.5	B-108
			4.51				5.37	9070	P3	35.5	B-108
37.5	9420	962	1.13	45.0	7850	802	1.35	9040	P3	40	B-106
			1.70				2.02	9050	P3	40	B-106
			2.37				2.83	9055	P3	40	B-106
			2.81				3.37	9060	P3	40	B-108
			4.32				5.18	9070	P3	40	B-108
33.3	10600	1080	0.91	40.0	8830	902	1.10	9040	P3	45	B-106
			1.40				1.67	9050	P3	45	B-106
			1.91				2.29	9055	P3	45	B-106
			2.21				2.64	9060	P3	45	B-108
			3.62				4.32	9070	P3	45	B-108
			4.78				5.72	9075	P3	45	B-108
30.0	11780	1200	0.89	36.0	9820	1000	1.08	9040	P3	50	B-106
			1.37				1.64	9050	P3	50	B-106
			1.81				2.18	9055	P3	50	B-106
			2.27				2.70	9060	P3	50	B-108
			3.35				4.00	9070	P3	50	B-108
			4.56				5.48	9075	P3	50	B-108
			4.91				5.89	9080	P3	50	B-108
26.8	13190	1350	1.13	32.1	10990	1120	1.35	9050	P3	56	B-106
			1.45				1.75	9055	P3	56	B-106
			1.78				2.13	9060	P3	56	B-108
			2.78				3.32	9070	P3	56	B-108
			3.83				4.59	9075	P3	56	B-108
			4.27				5.10	9080	P3	56	B-108
23.8	14840	1520	1.05	28.6	12370	1260	1.27	9050	P3	63	B-106
			1.48				1.78	9055	P3	63	B-106
			1.72				2.08	9060	P3	63	B-108
			2.67				3.21	9070	P3	63	B-108
			3.54				4.21	9075	P3	63	B-108
			4.05				4.83	9080	P3	63	B-108

Frequency 50Hz Output Speed r/min	Output Torque Tout Nm	Output Torque Tout kgf m	S F	Frequency 60Hz Output Speed r/min	Output Torque Tout Nm	Output Torque Tout kgf m	S F	Model Size	Assembly	Reduction Ratio	Page of Dimension Sheet Vertical
21.1	16730	1710	0.86	25.4	13940	1420	1.05	9050	P3	71	B-106
			1.18				1.43	9055	P3	71	B-106
			1.35				1.62	9060	P3	71	B-108
			2.24				2.67	9070	P3	71	B-108
			2.94				3.54	9075	P3	71	B-108
			3.51				4.18	9080	P3	71	B-108
			4.45				5.32	9085	P3	71	B-108
18.8	18850	1920	1.13	22.5	15700	1600	1.35	9055	P3	80	B-106
			2.83				3.37	9075	P3	80	B-108
			4.27				5.10	9085	P3	80	B-108
16.7	21200	2160	0.91	20.0	17670	1800	1.08	9055	P3	90	B-106
			2.37				2.83	9075	P3	90	B-108
			3.67				4.37	9085	P3	90	B-108

MOTOR	45 kW
	4P

Frequency 50Hz Output Speed r/min	Output Torque Tout Nm	Output Torque Tout kgf m	S F	Frequency 60Hz Output Speed r/min	Output Torque Tout Nm	Output Torque Tout kgf m	S F	Model Size	Assembly	Reduction Ratio	Page of Dimension Sheet Vertical
238	1800	184	4.95	286	1500	154	5.71	9040	P2	6.3	B-102
211	2030	208	4.46	254	1700	173	5.35	9040	P2	7.1	B-102
188	2290	234	3.46	225	1910	195	4.15	9035	P2	8	B-102
			4.22				4.86	9040	P2	8	B-102
167	2580	263	3.15	200	2150	219	3.77	9035	P2	9	B-102
			3.51				4.17	9040	P2	9	B-102
150	2870	293	2.71	180	2390	244	3.24	9035	P2	10	B-102
			3.51				4.17	9040	P2	10	B-102
134	3210	328	2.46	161	2670	273	2.95	9035	P2	11.2	B-102
			2.86				3.42	9040	P2	11.2	B-102
			4.17				5.00	9050	P2	11.2	B-102
120	3580	366	2.22	144	2980	305	2.66	9035	P2	12.5	B-102
			2.68				3.22	9040	P2	12.5	B-102
			4.11				4.93	9050	P2	12.5	B-102
107	4010	410	2.02	129	3340	341	2.42	9035	P2	14	B-102
			2.20				2.62	9040	P2	14	B-102
			3.40				4.06	9050	P2	14	B-102
			4.37				5.22	9055	P2	14	B-102
93.8	4580	468	1.73	113	3820	390	2.08	9035	P2	16	B-102
			2.15				2.57	9040	P2	16	B-102
			3.15				3.77	9050	P2	16	B-102
			4.40				5.26	9055	P2	16	B-102
83.3	5160	527	1.57	100	4300	439	1.88	9035	P2	18	B-102
			1.77				2.11	9040	P2	18	B-102
			2.60				3.11	9050	P2	18	B-102
			3.53				4.24	9055	P2	18	B-102
			4.11				4.93	9060	P2	18	B-104
75.0	5730	585	1.40	90.0	4780	488	1.66	9035	P2	20	B-102
			1.82				2.17	9040	P3	20	B-106
			2.86				3.42	9050	P3	20	B-106
			3.37				4.04	9055	P2	20	B-102
			4.73				5.64	9060	P3	20	B-108
67.0	6420	655	2.35	80.4	5350	546	2.82	9050	P3	22.4	B-106
			2.71				3.24	9055	P2	22.4	B-102
			3.73				4.46	9060	P3	22.4	B-108

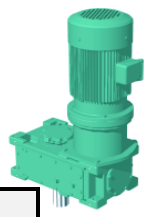

Frequency								Model			Page of Dimension Sheet
50Hz				60Hz							
Output Speed r/min	Output Torque Tout Nm	Output Torque Tout kgf m	S F	Output Speed r/min	Output Torque Tout Nm	Output Torque Tout kgf m	S F	Size	Assembly	Reduction Ratio	Vertical
60.0	7160	731	2.17	72.0	5970	609	2.62	9050	P3	25	B-106
			3.06				3.66	9055	P3	25	B-106
			3.62				4.33	9060	P3	25	B-108
53.6	8020	819	1.80	64.3	6690	683	2.15	9050	P3	28	B-106
			2.46				2.93	9055	P3	28	B-106
			2.86				3.42	9060	P3	28	B-108
			4.62				5.53	9070	P3	28	B-108
47.6	9020	921	1.82	57.1	7520	768	2.17	9050	P3	31.5	B-106
			2.33				2.80	9055	P3	31.5	B-106
			3.02				3.62	9060	P3	31.5	B-108
			4.44				5.31	9070	P3	31.5	B-108
42.3	10170	1040	1.51	50.7	8480	865	1.80	9050	P3	35.5	B-106
			1.88				2.24	9055	P3	35.5	B-106
			2.37				2.84	9060	P3	35.5	B-108
			3.71				4.42	9070	P3	35.5	B-108
			4.91				5.88	9075	P3	35.5	B-108
37.5	11460	1170	1.40	45.0	9550	975	1.66	9050	P3	40	B-106
			1.95				2.33	9055	P3	40	B-106
			2.31				2.77	9060	P3	40	B-108
			3.55				4.26	9070	P3	40	B-108
			4.68				5.60	9075	P3	40	B-108
33.3	12890	1320	1.15	40.0	10740	1100	1.37	9050	P3	45	B-106
			1.57				1.88	9055	P3	45	B-106
			1.82				2.17	9060	P3	45	B-108
			2.97				3.55	9070	P3	45	B-108
			3.93				4.71	9075	P3	45	B-108
			4.68				5.62	9080	P3	45	B-108
30.0	14330	1460	1.13	36.0	11940	1220	1.35	9050	P3	50	B-106
			1.48				1.80	9055	P3	50	B-106
			1.86				2.22	9060	P3	50	B-108
			2.75				3.28	9070	P3	50	B-108
			3.75				4.51	9075	P3	50	B-108
			4.04				4.84	9080	P3	50	B-108
26.8	16040	1640	0.93	32.1	13370	1370	1.11	9050	P3	56	B-106
			1.20				1.44	9055	P3	56	B-106
			1.46				1.75	9060	P3	56	B-108
			2.28				2.73	9070	P3	56	B-108
			3.15				3.77	9075	P3	56	B-108
			3.51				4.20	9080	P3	56	B-108
			4.91				5.86	9085	P3	56	B-108
23.8	18050	1840	1.22	28.6	15040	1540	1.46	9055	P3	63	B-106
			1.42				1.71	9060	P3	63	B-108
			2.20				2.64	9070	P3	63	B-108
			2.91				3.46	9075	P3	63	B-108
			3.33				3.97	9080	P3	63	B-108
			4.26				5.11	9085	P3	63	B-108
21.1	20340	2080	0.97	25.4	16950	1730	1.17	9055	P3	71	B-106
			1.11				1.33	9060	P3	71	B-108
			1.84				2.20	9070	P3	71	B-108
			2.42				2.91	9075	P3	71	B-108
			2.88				3.44	9080	P3	71	B-108
			3.66				4.37	9085	P3	71	B-108
18.8	22920	2340	0.93	22.5	19100	1950	1.11	9055	P3	80	B-106
			2.33				2.77	9075	P3	80	B-108
			3.51				4.20	9085	P3	80	B-108
16.7	25790	2630	1.95	20.0	21490	2190	2.33	9075	P3	90	B-108
			3.02				3.60	9085	P3	90	B-108

MOTOR	55 kW
	4P

Frequency								Model			Page of Dimension Sheet
50Hz				60Hz							
Output Speed r/min	Output Torque Tout Nm	Output Torque Tout kgf m	S F	Output Speed r/min	Output Torque Tout Nm	Output Torque Tout kgf m	S F	Size	Assembly	Reduction Ratio	Vertical
238	2210	225	4.05	286	1840	188	4.67	9040	P2	6.3	B-102
211	2490	254	3.65	254	2070	212	4.38	9040	P2	7.1	B-102
188	2800	286	3.45	225	2330	238	3.98	9040	P2	8	B-102
			4.92				5.65	9050	P2	8	B-102
167	3150	322	2.87	200	2630	268	3.41	9040	P2	9	B-102
			4.34				5.20	9050	P2	9	B-102
150	3500	358	2.87	180	2920	298	3.41	9040	P2	10	B-102
			4.10				4.70	9050	P2	10	B-102
			4.92				5.65	9055	P2	10	B-102
134	3920	400	2.34	161	3270	334	2.80	9040	P2	11.2	B-102
			3.41				4.09	9050	P2	11.2	B-102
			4.54				5.43	9055	P2	11.2	B-102
120	4380	447	2.20	144	3650	372	2.63	9040	P2	12.5	B-102
			3.36				4.03	9050	P2	12.5	B-102
			4.10				4.70	9055	P2	12.5	B-102
107	4900	501	1.80	129	4090	417	2.14	9040	P2	14	B-102
			2.78				3.32	9050	P2	14	B-102
			3.58				4.27	9055	P2	14	B-102
			4.40				5.25	9060	P2	14	B-104
93.8	5600	572	2.58	113	4670	477	3.09	9050	P2	16	B-102
			3.60				4.30	9055	P2	16	B-102
			4.27				5.10	9060	P2	16	B-104
83.3	6300	644	2.12	100	5250	536	2.54	9050	P2	18	B-102
			2.89				3.47	9055	P2	18	B-102
			3.36				4.03	9060	P2	18	B-104
75.0	7000	715	2.34	90.0	5840	596	2.80	9050	P3	20	B-106
			2.76				3.30	9055	P2	20	B-102
			3.87				4.61	9060	P3	20	B-108
67.0	7840	801	1.92	80.4	6540	667	2.30	9050	P3	22.4	B-106
			2.21				2.65	9055	P2	22.4	B-102
			3.05				3.65	9060	P3	22.4	B-108
			4.72				5.63	9070	P3	22.4	B-108
60.0	8750	894	2.50	72.0	7300	745	3.00	9055	P3	25	B-106
			2.96				3.54	9060	P3	25	B-108
			4.54				5.43	9070	P3	25	B-108
53.6	9800	1000	2.01	64.3	8170	834	2.40	9055	P3	28	B-106
			2.34				2.80	9060	P3	28	B-108
			3.78				4.52	9070	P3	28	B-108
			5.00				5.98	9075	P3	28	B-108
47.6	11030	1130	1.90	57.1	9190	938	2.29	9055	P3	31.5	B-106
			2.47				2.96	9060	P3	31.5	B-108
			3.63				4.34	9070	P3	31.5	B-108
			4.80				5.72	9075	P3	31.5	B-108
42.3	12430	1270	1.54	50.7	10360	1060	1.83	9055	P3	35.5	B-106
			1.94				2.32	9060	P3	35.5	B-108
			3.03				3.61	9070	P3	35.5	B-108
			4.01				4.81	9075	P3	35.5	B-108
			4.67				5.58	9080	P3	35.5	B-108
37.5	14010	1430	1.60	45.0	11670	1190	1.90	9055	P3	40	B-106
			1.89				2.27	9060	P3	40	B-108
			2.90				3.49	9070	P3	40	B-108
			3.83				4.58	9075	P3	40	B-108
			4.43				5.30	9080	P3	40	B-108

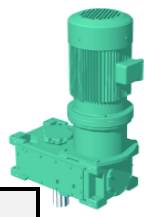

Frequency								Model			Page of Dimension Sheet
50Hz				60Hz							
Output Speed r/min	Output Torque Tout Nm	Output Torque Tout kgf m	S F	Output Speed r/min	Output Torque Tout Nm	Output Torque Tout kgf m	S F	Size	Assembly	Reduction Ratio	Vertical
33.3	15760	1610	1.29	40.0	13130	1340	1.54	9055	P3	45	B-106
			1.49				1.78	9060	P3	45	B-108
			2.43				2.90	9070	P3	45	B-108
			3.21				3.85	9075	P3	45	B-108
			3.83				4.59	9080	P3	45	B-108
			4.89				5.83	9085	P3	45	B-108
30.0	17510	1790	1.21	36.0	14590	1490	1.47	9055	P3	50	B-106
			1.52				1.81	9060	P3	50	B-108
			2.25				2.69	9070	P3	50	B-108
			3.07				3.69	9075	P3	50	B-108
			3.30				3.96	9080	P3	50	B-108
26.8	19610	2000	0.98	32.1	16340	1670	1.18	9055	P3	56	B-106
			1.20				1.43	9060	P3	56	B-108
			1.87				2.23	9070	P3	56	B-108
			2.58				3.09	9075	P3	56	B-108
			2.87				3.43	9080	P3	56	B-108
			4.01				4.80	9085	P3	56	B-108
23.8	22060	2250	1.16	28.6	18380	1880	1.40	9060	P3	63	B-108
			1.80				2.16	9070	P3	63	B-108
			2.38				2.83	9075	P3	63	B-108
			2.72				3.25	9080	P3	63	B-108
			3.49				4.18	9085	P3	63	B-108
21.1	24860	2540	0.90	25.4	20720	2120	1.09	9060	P3	71	B-108
			1.50				1.80	9070	P3	71	B-108
			1.98				2.38	9075	P3	71	B-108
			2.36				2.81	9080	P3	71	B-108
			3.00				3.58	9085	P3	71	B-108
18.8	28010	2860	1.90	22.5	23340	2380	2.27	9075	P3	80	B-108
			2.87				3.43	9085	P3	80	B-108
16.7	31520	3220	1.60	20.0	26260	2680	1.90	9075	P3	90	B-108
			2.47				2.94	9085	P3	90	B-108

MOTOR	75 kW
	4P

Frequency								Model			Page of Dimension Sheet
50Hz				60Hz							
Output Speed r/min	Output Torque Tout Nm	Output Torque Tout kgf m	S F	Output Speed r/min	Output Torque Tout Nm	Output Torque Tout kgf m	S F	Size	Assembly	Reduction Ratio	Vertical
238	3010	307	4.06	286	2510	256	4.66	9050	P2	6.3	B-102
211	3390	346	3.90	254	2830	288	4.65	9050	P2	7.1	B-102
188	3820	390	4.06	225	3180	325	4.66	9055	P2	8	B-102
167	4300	439	4.06	200	3580	366	4.66	9055	P2	9	B-102
			4.94				5.90	9060	P2	9	B-104
150	4780	488	3.61	180	3980	406	4.14	9055	P2	10	B-102
134	5350	546	3.33	161	4460	455	3.98	9055	P2	11.2	B-102
			4.01				4.80	9060	P2	11.2	B-104
120	5970	609	3.01	144	4970	508	3.45	9055	P2	12.5	B-102
			4.09				4.88	9060	P2	12.5	B-104
107	6690	683	2.62	129	5570	569	3.13	9055	P2	14	B-102
			3.22				3.85	9060	P2	14	B-104
93.8	7640	780	2.64	113	6370	650	3.16	9055	P2	16	B-102
			3.13				3.74	9060	P2	16	B-104
			4.90				5.86	9070	P2	16	B-104
83.3	8600	878	2.12	100	7160	731	2.54	9055	P2	18	B-102
			2.46				2.96	9060	P2	18	B-104
			4.10				4.90	9070	P2	18	B-104

75 kW

Frequency								Model			Page of Dimension Sheet
50Hz				60Hz							
Output Speed r/min	Output Torque Tout Nm	Output Torque Tout kgf m	S F	Output Speed r/min	Output Torque Tout Nm	Output Torque Tout kgf m	S F	Size	Assembly	Reduction Ratio	Vertical
75.0	9550	975	2.02	90.0	7960	813	2.42	9055	P2	20	B-102
			2.84				3.38	9060	P3	20	B-108
			4.13				4.74	9070	P3	20	B-108
67.0	10700	1090	1.62	80.4	8910	910	1.94	9055	P2	22.4	B-102
			2.24				2.68	9060	P3	22.4	B-108
			3.46				4.13	9070	P3	22.4	B-108
			4.34				5.20	9075	P2	22.4	B-104
60.0	11940	1220	3.33	72.0	9950	1020	3.98	9070	P3	25	B-108
			4.13				4.74	9075	P3	25	B-108
53.6	13370	1370	2.77	64.3	11140	1140	3.32	9070	P3	28	B-108
			3.66				4.38	9075	P3	28	B-108
			4.40				5.26	9080	P3	28	B-108
47.6	15040	1540	2.66	57.1	12530	1280	3.18	9070	P3	31.5	B-108
			3.52				4.20	9075	P3	31.5	B-108
			3.96				4.73	9080	P3	31.5	B-108
42.3	16950	1730	2.22	50.7	14130	1440	2.65	9070	P3	35.5	B-108
			2.94				3.53	9075	P3	35.5	B-108
			3.42				4.09	9080	P3	35.5	B-108
			4.61				5.50	9085	P3	35.5	B-108
37.5	19100	1950	2.13	45.0	15920	1630	2.56	9070	P3	40	B-108
			2.81				3.36	9075	P3	40	B-108
			3.25				3.89	9080	P3	40	B-108
			4.17				4.98	9085	P3	40	B-108
33.3	21490	2190	1.78	40.0	17910	1830	2.13	9070	P3	45	B-108
			2.36				2.82	9075	P3	45	B-108
			2.81				3.37	9080	P3	45	B-108
			3.58				4.28	9085	P3	45	B-108
30.0	23880	2440	1.65	36.0	19900	2030	1.97	9070	P3	50	B-108
			2.25				2.70	9075	P3	50	B-108
			2.42				2.90	9080	P3	50	B-108
			3.42				4.10	9085	P3	50	B-108
26.8	26740	2730	1.37	32.1	22280	2280	1.64	9070	P3	56	B-108
			1.89				2.26	9075	P3	56	B-108
			2.10				2.52	9080	P3	56	B-108
			2.94				3.52	9085	P3	56	B-108
23.8	30080	3070	1.32	28.6	25070	2560	1.58	9070	P3	63	B-108
			1.74				2.08	9075	P3	63	B-108
			2.00				2.38	9080	P3	63	B-108
			2.56				3.06	9085	P3	63	B-108
21.1	33900	3460	1.10	25.4	28250	2880	1.32	9070	P3	71	B-108
			1.45				1.74	9075	P3	71	B-108
			1.73				2.06	9080	P3	71	B-108
			2.20				2.62	9085	P3	71	B-108
18.8	38200	3900	1.40	22.5	31830	3250	1.66	9075	P3	80	B-108
			2.10				2.52	9085	P3	80	B-108
16.7	42980	4390	1.17	20.0	35810	3660	1.40	9075	P3	90	B-108
			1.81				2.16	9085	P3	90	B-108

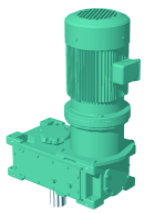

MOTOR	90 kW
	4P

Frequency								Model			Page of Dimension Sheet
50Hz				60Hz							
Output Speed r/min	Output Torque Tout Nm	Output Torque Tout kgf m	S F	Output Speed r/min	Output Torque Tout Nm	Output Torque Tout kgf m	S F	Size	Assembly	Reduction Ratio	Vertical
188	4580	468	3.38	225	3820	390	3.88	9055	P2	8	B-102
167	5160	527	3.38	200	4300	439	3.88	9055	P2	9	B-102
			4.12				4.92	9060	P2	9	B-104
150	5730	585	4.24	180	4780	488	5.02	9060	P2	10	B-104
134	6420	655	2.77	161	5350	546	3.32	9055	P2	11.2	B-102
			3.34				4.00	9060	P2	11.2	B-104
120	7160	731	3.41	144	5970	609	4.06	9060	P2	12.5	B-104
107	8020	819	2.68	129	6690	683	3.21	9060	P2	14	B-104
			4.25				5.07	9070	P2	14	B-104
93.8	9170	936	2.61	113	7640	780	3.12	9060	P2	16	B-104
			4.08				4.88	9070	P2	16	B-104
83.3	10310	1050	2.05	100	8600	878	2.46	9060	P2	18	B-104
			3.42				4.08	9070	P2	18	B-104
			4.51				5.38	9075	P2	18	B-104
75.0	11460	1170	3.44	90.0	9550	975	3.95	9070	P3	20	B-108
			4.32				5.16	9075	P2	20	B-104
67.0	12840	1310	2.88	80.4	10700	1090	3.44	9070	P3	22.4	B-108
			3.62				4.33	9075	P2	22.4	B-104
			4.45				5.33	9080	P3	22.4	B-108
60.0	14330	1460	2.77	72.0	11940	1220	3.32	9070	P3	25	B-108
			3.44				3.95	9075	P3	25	B-108
			4.24				5.06	9080	P3	25	B-108
53.6	16040	1640	2.31	64.3	13370	1370	2.76	9070	P3	28	B-108
			3.05				3.65	9075	P3	28	B-108
			3.66				4.38	9080	P3	28	B-108
			4.66				5.57	9085	P3	28	B-108
47.6	18050	1840	2.22	57.1	15040	1540	2.65	9070	P3	31.5	B-108
			2.93				3.50	9075	P3	31.5	B-108
			3.30				3.94	9080	P3	31.5	B-108
			4.46				5.34	9085	P3	31.5	B-108
42.3	20340	2080	1.85	50.7	16950	1730	2.21	9070	P3	35.5	B-108
			2.45				2.94	9075	P3	35.5	B-108
			2.85				3.41	9080	P3	35.5	B-108
			3.84				4.58	9085	P3	35.5	B-108
37.5	22920	2340	1.77	45.0	19100	1950	2.13	9070	P3	40	B-108
			2.34				2.80	9075	P3	40	B-108
			2.71				3.24	9080	P3	40	B-108
			3.47				4.15	9085	P3	40	B-108
33.3	25790	2630	1.48	40.0	21490	2190	1.77	9070	P3	45	B-108
			1.96				2.35	9075	P3	45	B-108
			2.34				2.81	9080	P3	45	B-108
			2.98				3.56	9085	P3	45	B-108
30.0	28650	2930	1.87	36.0	23880	2440	2.25	9075	P3	50	B-108
			2.02				2.42	9080	P3	50	B-108
			2.85				3.42	9085	P3	50	B-108
26.8	32090	3280	1.57	32.1	26740	2730	1.88	9075	P3	56	B-108
			1.75				2.10	9080	P3	56	B-108
			2.45				2.93	9085	P3	56	B-108
23.8	36100	3690	1.45	28.6	30080	3070	1.73	9075	P3	63	B-108
			1.66				1.98	9080	P3	63	B-108
			2.13				2.55	9085	P3	63	B-108
21.1	40680	4150	1.21	25.4	33900	3460	1.45	9075	P3	71	B-108
			1.44				1.72	9080	P3	71	B-108
			1.83				2.18	9085	P3	71	B-108
18.8	45840	4680	1.16	22.5	38200	3900	1.38	9075	P3	80	B-108
			1.75				2.10	9085	P3	80	B-108
16.7	51570	5270	0.97	20.0	42980	4390	1.16	9075	P3	90	B-108
			1.51				1.80	9085	P3	90	B-108

MOTOR	110 kW
	4P

Frequency								Model			Page of Dimension Sheet
50Hz				60Hz							
Output Speed r/min	Output Torque Tout Nm	Output Torque Tout kgf m	S F	Output Speed r/min	Output Torque Tout Nm	Output Torque Tout kgf m	S F	Size	Assembly	Reduction Ratio	Vertical
134	7840	801	4.50	161	6540	667	5.38	9070	P2	11.2	B-104
120	8750	894	4.16	144	7300	745	4.97	9070	P2	12.5	B-104
107	9800	1000	3.48	129	8170	834	4.15	9070	P2	14	B-104
			4.78				5.70	9075	P2	14	B-104
93.8	11210	1140	3.34	113	9340	953	4.00	9070	P2	16	B-104
			4.40				5.13	9075	P2	16	B-104
83.3	12610	1290	2.80	100	10510	1070	3.34	9070	P2	18	B-104
			3.69				4.40	9075	P2	18	B-104
			4.37				5.21	9080	P2	18	B-104
75.0	14010	1430	3.53	90.0	11670	1190	4.22	9075	P2	20	B-104
			4.20				5.03	9080	P3	20	B-108
67.0	15690	1600	2.96	80.4	13070	1330	3.54	9075	P2	22.4	B-104
			3.64				4.36	9080	P3	22.4	B-108
			4.57				5.46	9085	P2	22.4	B-104
60.0	17510	1790	2.81	72.0	14590	1490	3.23	9075	P3	25	B-108
			3.47				4.14	9080	P3	25	B-108
			4.43				5.20	9085	P3	25	B-108
53.6	19610	2000	2.50	64.3	16340	1670	2.99	9075	P3	28	B-108
			3.00				3.59	9080	P3	28	B-108
			3.81				4.56	9085	P3	28	B-108
47.6	22060	2250	2.40	57.1	18380	1880	2.86	9075	P3	31.5	B-108
			2.70				3.22	9080	P3	31.5	B-108
			3.65				4.37	9085	P3	31.5	B-108
42.3	24860	2540	2.00	50.7	20720	2120	2.40	9075	P3	35.5	B-108
			2.33				2.79	9080	P3	35.5	B-108
			3.14				3.75	9085	P3	35.5	B-108
37.5	28010	2860	1.91	45.0	23340	2380	2.29	9075	P3	40	B-108
			2.21				2.65	9080	P3	40	B-108
			2.84				3.40	9085	P3	40	B-108
33.3	31520	3220	1.60	40.0	26260	2680	1.92	9075	P3	45	B-108
			1.91				2.29	9080	P3	45	B-108
			2.44				2.91	9085	P3	45	B-108
30.0	35020	3580	1.65	36.0	29180	2980	1.98	9080	P3	50	B-108
			2.33				2.80	9085	P3	50	B-108
26.8	39220	4000	1.43	32.1	32680	3340	1.71	9080	P3	56	B-108
			2.00				2.40	9085	P3	56	B-108
23.8	44120	4500	1.74	28.6	36770	3750	2.09	9085	P3	63	B-108
21.1	49720	5080	1.50	25.4	41440	4230	1.79	9085	P3	71	B-108
18.8	56030	5720	1.43	22.5	46690	4770	1.71	9085	P3	80	B-108
16.7	63030	6440	1.23	20.0	52530	5360	1.47	9085	P3	90	B-108

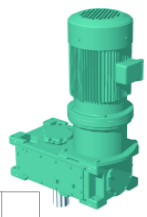

Allowable Radial and Axial Loads on Slow Speed Shaft (kN)

Allowable Radial Load

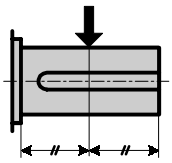

Sheet1

Aplicable to configurations : Double Redcution RR,LL/

	L.Speed Shaft Speed r/min	Size of Reducer															
		9015	9025	9030	9035	9045	9050	9055	9060	9070	9075	9080	9085	9090	9095	9100	9105
Standard bearing model	250	12.8	22.1	17.7	29.4	38.7	37.8	46.6	39.7	44.1	109.9	76.5	112.8	100.1	137.8	139.8	192.3
	160	14.7	24.0	20.1	31.4	41.2	39.7	48.1	41.7	46.1	110.4	85.8	113.3	108.9	145.7	157.5	200.6
	100	16.2	23.5	25.0	37.8	49.1	47.1	53.5	47.6	54.4	119.2	99.1	127.0	122.1	147.6	166.3	183.9
	63	16.2	23.1	29.9	42.2	58.4	55.9	62.3	58.9	65.2	146.7	125.6	156.0	125.6	143.7	165.3	178.1
	40	16.2	23.1	35.3	42.2	66.7	67.2	75.0	71.1	79.0	178.1	161.9	197.2	125.1	137.8	164.8	173.6
	<=25	15.7	23.1	42.2	41.2	80.4	79.0	90.3	86.8	99.1	218.8	208.0	236.9	122.6	135.4	163.3	167.3
Heavy duty bearing model	250								71.1	70.1	155.5	122.6	158.9	141.8	158.9	181.0	213.9
	160								78.0	77.5	158.9	137.3	162.4	132.4	151.6	174.6	200.6
	100								81.4	92.2	171.7	149.6	178.5	127.0	147.6	166.8	183.9
	63								81.4	114.8	206.5	149.1	214.8	125.6	143.7	165.8	178.1
	40								81.4	117.7	231.5	148.6	236.9	125.1	137.8	165.3	173.6
	<=25								81.4	117.7	231.5	147.2	236.9	122.6	135.4	163.8	167.3

Sheet2

Applicable to configurations : Double Reduction RL,LR/

	L.Speed Shaft Speed r/min	Size of Reducer															
		9015	9025	9030	9035	9045	9050	9055	9060	9070	9075	9080	9085	9090	9095	9100	9105
Standard bearing model	250	8.3	15.2	9.8	21.6	28.4	22.6	31.4	16.7	17.2	86.8	43.7	80.4	58.4	97.6	80.4	131.5
	160	9.8	18.6	12.3	23.1	29.4	24.0	31.4	18.1	17.7	85.3	52.5	79.5	64.3	103.0	96.1	138.3
	100	13.7	23.5	16.7	29.4	37.3	28.4	35.3	22.1	25.5	92.2	62.8	92.2	74.6	110.9	105.9	146.7
	63	16.7	28.4	21.6	36.3	47.1	37.3	42.7	33.4	33.8	117.2	89.3	118.2	104.5	148.1	153.5	200.1
	40	21.1	35.3	27.0	43.7	54.4	48.6	55.4	45.1	47.6	149.1	125.6	158.9	146.7	172.2	203.6	235.4
	<=25	24.5	36.3	34.3	50.5	68.7	61.8	70.1	60.8	67.7	171.9	171.2	211.4	171.2	171.2	215.3	304.1
Heavy duty bearing model	250								46.1	40.2	133.9	89.8	127.5	114.8	156.0	150.6	213.4
	160								52.0	45.6	135.4	103.5	128.0	125.1	164.8	170.7	223.2
	100								60.3	59.4	145.7	115.8	143.7	140.8	176.1	187.4	236.9
	63								81.4	80.0	171.9	152.5	176.6	174.1	186.9	218.8	301.7
	40								81.4	108.9	171.9	191.8	224.6	191.8	193.7	241.8	304.1
	<=25								81.4	117.7	171.9	180.5	230.3	171.2	171.2	214.8	304.1

Allowable Axial Load

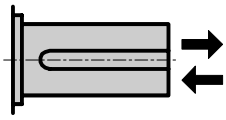

	L.Speed Shaft Speed r/min	Size of Reducer															
		9015	9025	9030	9035	9045	9050	9055	9060	9070	9075	9080	9085	9090	9095	9100	9105
Standard bearing model	250	9.3	11.4	14.7	23.1	35.3	32.9	31.9	27.0	28.0	45.6	23.5	42.7	31.4	52.0	45.1	50.0
	160	9.3	11.4	18.1	23.1	35.3	33.4	31.9	28.9	28.4	45.1	27.5	42.2	34.3	53.0	53.0	49.5
	100	9.3	11.4	24.5	23.1	35.3	37.3	31.9	34.3	39.7	48.6	32.9	48.6	43.2	59.4	58.4	54.0
	63	9.3	11.4	26.5	23.1	35.3	37.3	31.9	49.1	52.5	61.3	45.6	60.3	54.0	59.8	81.4	74.6
	40	9.3	11.4	26.5	23.1	35.3	37.3	31.9	49.1	61.4	62.8	63.3	60.3	59.8	59.8	83.4	83.4
	<=25	9.3	11.4	26.5	23.1	35.3	37.3	31.9	49.1	61.4	62.8	67.7	60.3	59.8	59.8	83.4	83.4
Heavy duty bearing model	250								23.1	18.6	93.2	56.9	86.8	59.8	59.8	83.4	83.4
	160								25.0	21.1	94.2	56.9	87.8	59.8	59.8	83.4	83.4
	100								29.4	27.5	101.5	56.9	97.6	59.8	59.8	83.4	83.4
	63								39.2	36.3	124.1	56.9	119.2	59.8	59.8	83.4	83.4
	40								39.2	49.1	149.1	56.9	149.6	59.8	59.8	83.4	83.4
	<=25								39.2	56.9	181.0	56.9	187.9	59.8	59.8	83.4	83.4

Allowable Radial and Axial Loads on Slow Speed (kN)

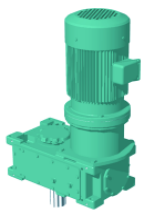

Triple Reduction RL,LR / Quadruple Reduction RR,LL

Size of Reducer								L.Speed Shaft Speed r/min	
9110	9115	9118	9121	9126	9128	9131	9136		
167.8	222.7							250	Standard bearing model
174.1	234.9							160	
184.9	245.7	391.9	352.7	330.6	315.4	403.2	391.9	100	
190.8	303.1	387.5	369.3	341.4	328.6	462.5	430.7	63	
194.7	320.8	460.1	449.3	401.2	409.6	572.4	511.1	40	
184.9	316.4	448.3	554.8	497.4	534.6	733.8	638.6	<=25	
250.6	316.9							250	Heavy duty bearing model
214.8	334.5							160	
195.2	340.9							100	
190.8	333.5							63	
194.7	320.8							40	
184.9	316.4							<=25	

Units : kN

Triple Redcution RR,LL / Quadruple Reduction RL,LR

Size of Reducer								L.Speed Shaft Speed r/min	
9110	9115	9118	9121	9126	9128	9131	9136		
94.2	152.5							250	Standard bearing model
92.2	155.0							160	
101.0	167.3	312.0	228.1	197.7	159.4	203.6	190.3	100	
144.7	220.7	292.3	244.3	206.0	170.7	260.9	218.8	63	
199.1	250.2	373.3	322.7	257.0	250.2	369.3	286.5	40	
272.7	353.2	460.1	427.2	348.7	373.3	528.3	398.3	<=25	
191.3	248.7							250	Heavy duty bearing model
197.7	261.4							160	
210.4	274.2							100	
267.8	341.9							63	
323.7	382.1							40	
323.7	374.7							<=25	

Units : kN

Size of Reducer								L.Speed Shaft Speed r/min	
9110	9115	9118	9121	9126	9128	9131	9136		
50.0	76.5							250	Standard bearing model
49.5	76.5							160	
54.0	83.4	119.7	121.6	116.7	91.2	113.3	107.9	100	
74.6	83.4	119.7	121.6	121.6	96.6	140.3	122.6	63	
83.4	83.4	119.7	121.6	121.6	134.9	191.3	155.5	40	
83.4	83.4	119.7	121.6	121.6	144.2	192.3	192.3	<=25	
83.4	83.4							250	Heavy duty bearing model
83.4	83.4							160	
83.4	83.4							100	
83.4	83.4							63	
83.4	83.4							40	
83.4	83.4							<=25	

Units : kN

Overhang Factor

Overhang Member	Overhang Factor
Sprocket (Single Row)	1
Sprocket (Double Row)	1.25
Gears	1.25
V belt	1.5
Flat Belt	2.5

Notes

1. The value shown in the table is allowable radial load when it is applied to the center of the solid shaft (except hollow shaft).
   Consult us when a load is not in the center.
2. Consult us for the blanks in the table.
3. Consult us when the radial load is applied upward.

Allowable Radial and Axial Loads on Slow Speed Shaft (kgf)

Allowable Radial Load

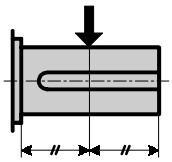

Sheet1

Aplicable to configurations : Double Redcution RR,LL/

	L.Speed Shaft Speed r/min	Size of Reducer															
		9015	9025	9030	9035	9045	9050	9055	9060	9070	9075	9080	9085	9090	9095	9100	9105
Standard bearing model	250	1300	2250	1800	3000	3950	3850	4750	4050	4500	11200	7800	11500	10200	14050	14250	19600
	160	1500	2450	2050	3200	4200	4050	4900	4250	4700	11250	8750	11550	11100	14850	16050	20450
	100	1650	2400	2550	3850	5000	4800	5450	4850	5550	12150	10100	12950	12450	15050	16950	18750
	63	1650	2350	3050	4300	5950	5700	6350	6000	6650	14950	12800	15900	12800	14650	16850	18150
	40	1650	2350	3600	4300	6800	6850	7650	7250	8050	18150	16500	20100	12750	14050	16800	17700
	<=25	1600	2350	4300	4200	8200	8050	9200	8850	10100	22300	21200	24150	12500	13800	16650	17050
Heavy duty bearing model	250								7250	7150	15850	12500	16200	14450	16200	18450	21800
	160								7950	7900	16200	14000	16550	13500	15450	17800	20450
	100								8300	9400	17500	15250	18200	12950	15050	17000	18750
	63								8300	11700	21050	15200	21900	12800	14650	16900	18150
	40								8300	12000	23600	15150	24150	12750	14050	16850	17700
	<=25								8300	12000	23600	15000	24150	12500	13800	16700	17050

Sheet2

Applicable to configurations : Double Reduction RL,LR/

	L.Speed Shaft Speed r/min	Size of Reducer															
		9015	9025	9030	9035	9045	9050	9055	9060	9070	9075	9080	9085	9090	9095	9100	9105
Standard bearing model	250	850	1550	1000	2200	2900	2300	3200	1700	1750	8850	4450	8200	5950	9950	8200	13400
	160	1000	1900	1250	2350	3000	2450	3200	1850	1800	8700	5350	8100	6550	10500	9800	14100
	100	1400	2400	1700	3000	3800	2900	3600	2250	2600	9400	6400	9400	7600	11300	10800	14950
	63	1700	2900	2200	3700	4800	3800	4350	3400	3450	11950	9100	12050	10650	15100	15650	20400
	40	2150	3600	2750	4450	5550	4950	5650	4600	4850	15200	12800	16200	14950	17550	20750	24000
	<=25	2500	3700	3500	5150	7000	6300	7150	6200	6900	17520	17450	21550	17450	17450	21950	31000
Heavy duty bearing model	250								4700	4100	13650	9150	13000	11700	15900	15350	21750
	160								5300	4650	13800	10550	13050	12750	16800	17400	22750
	100								6150	6050	14850	11800	14650	14350	17950	19100	24150
	63								8300	8150	17520	15550	18000	17750	19050	22300	30750
	40								8300	11100	17520	19550	22900	19550	19750	24650	31000
	<=25								8300	12000	17520	18400	23480	17450	17450	21900	31000

Allowable Axial Load

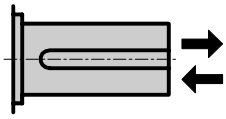

	L.Speed Shaft Speed r/min	Size of Reducer															
		9015	9025	9030	9035	9045	9050	9055	9060	9070	9075	9080	9085	9090	9095	9100	9105
Standard bearing model	250	950	1160	1500	2350	3600	3350	3250	2750	2850	4650	2400	4350	3200	5300	4600	5100
	160	950	1160	1850	2350	3600	3400	3250	2950	2900	4600	2800	4300	3500	5400	5400	5050
	100	950	1160	2500	2350	3600	3800	3250	3500	4050	4950	3350	4950	4400	6050	5950	5500
	63	950	1160	2700	2350	3600	3800	3250	5000	5350	6250	4650	6150	5500	6100	8300	7600
	40	950	1160	2700	2350	3600	3800	3250	5000	6260	6400	6450	6150	6100	6100	8500	8500
	<=25	950	1160	2700	2350	3600	3800	3250	5000	6260	6400	6900	6150	6100	6100	8500	8500
Heavy duty bearing model	250								2350	1900	9500	5800	8850	6100	6100	8500	8500
	160								2550	2150	9600	5800	8950	6100	6100	8500	8500
	100								3000	2800	10350	5800	9950	6100	6100	8500	8500
	63								4000	3700	12650	5800	12150	6100	6100	8500	8500
	40								4000	5000	15200	5800	15250	6100	6100	8500	8500
	<=25								4000	5800	18450	5800	19150	6100	6100	8500	8500

Allowable Radial and Axial Loads on Slow Speed (kgf)

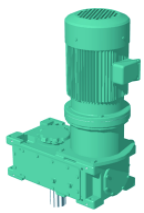

Triple Reduction RL,LR / Quadruple Reduction RR,LL

Size of Reducer								L.Speed Shaft Speed r/min	
9110	9115	9118	9121	9126	9128	9131	9136		
17100	22700							250	Standard bearing model
17750	23950							160	
18850	25050	39950	35950	33700	32150	41100	39950	100	
19450	30900	39500	37650	34800	33500	47150	43900	63	
19850	32700	46900	45800	40900	41750	58350	52100	40	
18850	32250	45700	56550	50700	54500	74800	65100	<=25	
25550	32300							250	Heavy duty bearing model
21900	34100							160	
19900	34750							100	
19450	34000							63	
19850	32700							40	
18850	32250							<=25	

Units : kgf

Triple Redcution RR,LL / Quadruple Reduction RL,LR

Size of Reducer								L.Speed Shaft Speed r/min	
9110	9115	9118	9121	9126	9128	9131	9136		
9600	15550							250	Standard bearing model
9400	15800							160	
10300	17050	31800	23250	20150	16250	20750	19400	100	
14750	22500	29800	24900	21000	17400	26600	22300	63	
20300	25500	38050	32900	26200	25500	37650	29200	40	
27800	36000	46900	43550	35550	38050	53850	40600	<=25	
19500	25350							250	Heavy duty bearing model
20150	26650							160	
21450	27950							100	
27300	34850							63	
33000	38950							40	
33000	38200							<=25	

Units : kgf

Size of Reducer								L.Speed Shaft Speed r/min	
9110	9115	9118	9121	9126	9128	9131	9136		
5100	7800							250	Standard bearing model
5050	7800							160	
5500	8500	12200	12400	11900	9300	11550	11000	100	
7600	8500	12200	12400	12400	9850	14300	12500	63	
8500	8500	12200	12400	12400	13750	19500	15850	40	
8500	8500	12200	12400	12400	14700	19600	19600	<=25	
8500	8500							250	Heavy duty bearing model
8500	8500							160	
8500	8500							100	
8500	8500							63	
8500	8500							40	
8500	8500							<=25	

Units : kgf

Overhang Factor

Overhang Member	Overhang Factor
Sprocket (Single Row)	1
Sprocket (Double Row)	1.25
Gears	1.25
V belt	1.5
Flat Belt	2.5

Notes

1. The value shown in the table is allowable radial load when it is applied to the center of the solid shaft (except hollow shaft).
   Consult us when a load is not in the center.
2. Consult us for the blanks in the table.
3. Consult us when the radial load is applied upward.

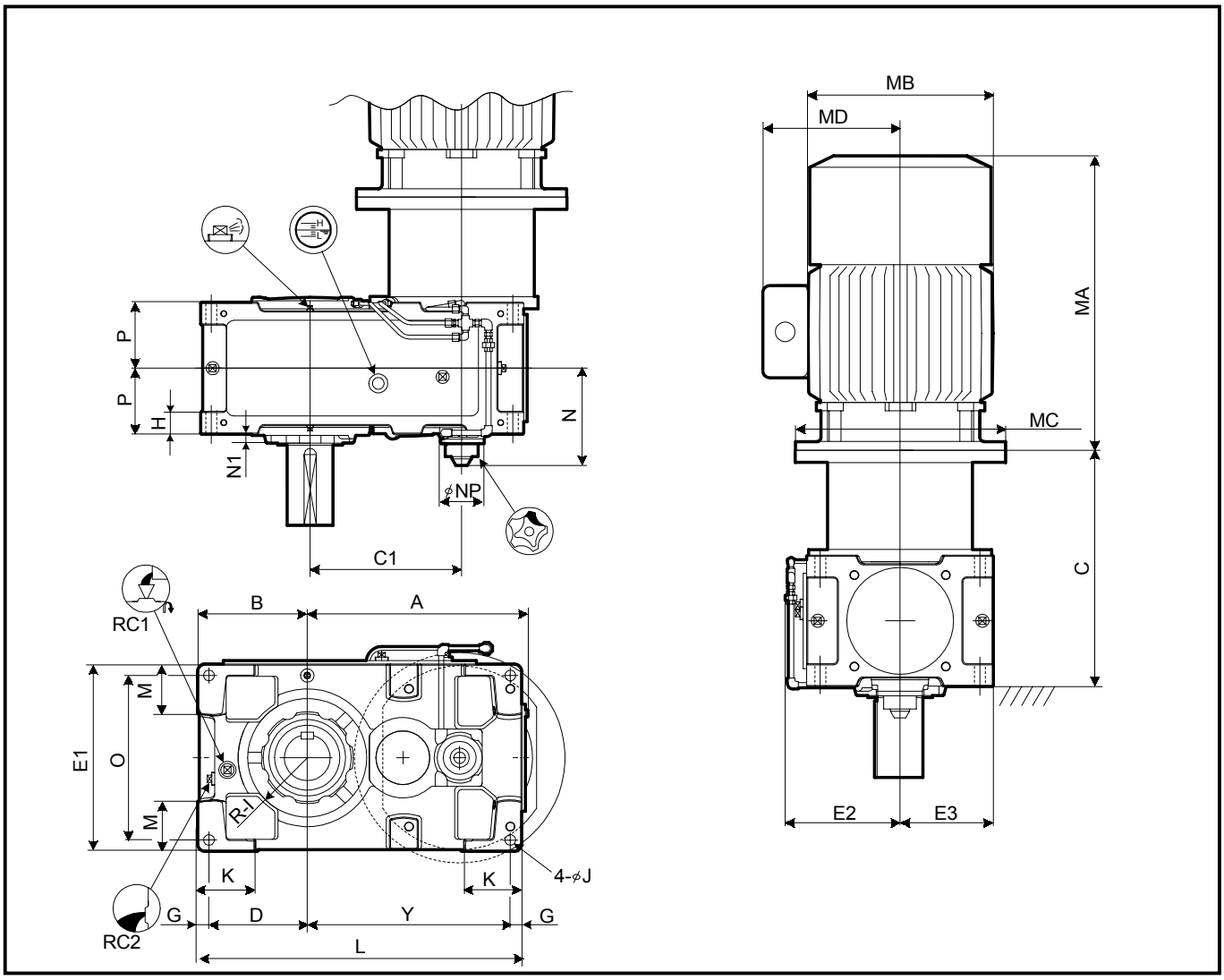

Slow Speed Shaft

Solid Shaft	Hollow Shaft (Shrink Disk Type)	Hollow Shaft (KeyType)
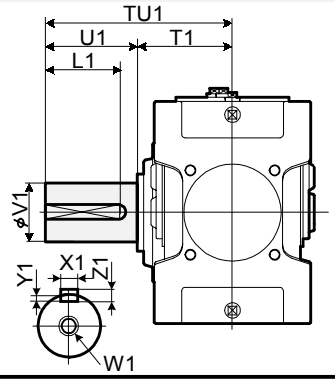	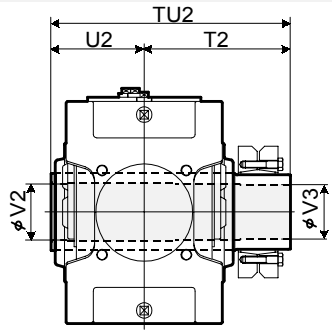	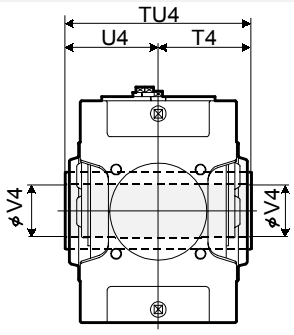
	Refer to the page D-18 for details.	Refer to the page D -19 for details.

Standard Shaft Arrangement Configuration

RJL	RJR
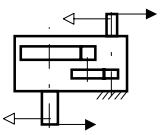	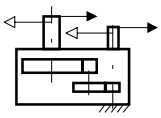

1.Key and keyways are based on ISO R773-1969 Close keys(JIS B1301-1996 Parallel key in fastening type)
2.The oil quantity is approximate.Oil shall be supplied within the range shown on the oil gauge.
3. Refer to the page D - 12 for dimensions not shown in these drawings.
4. Refer to the page D - 25 for the dimension of optional parts.
5. Refer to the page D - 33 for motor terminal box position.
6. Refer to the page D - 34 for flange dimension.

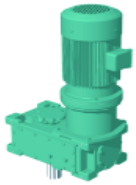

Size	A	B	C1	C	D	E1	E2	E3	G	H	I	J	K	L	M	N	N1	NP	O	P	Y
9015	295	160	194	See below	140	270	195	135	20	35	80	15	95	440	70	183	25	100	230	102.5	260
9025	346	175	227		155	310	215	155	20	40	87.5	19	110	505	75	195	23	100	270	117.5	310
9030	406	200	264		175	320	220	160	25	50	105	24	120	590	85	208	22	100	270	132.5	365
9035	437	219	295		194	370	245	185	25	50	120	24	120	640	100	208	22	100	320	132.5	396
9040	467	235	306		205	400	260	200	30	60	128	28	150	685	100	235	15	117	340	157.5	420
9050	537	255	358		225	420	270	210	30	60	140	28	150	775	110	255	23	117	360	172.5	490
9055	576	286	397		256	490	305	245	30	60	155	28	150	845	135	255	23	117	430	172.5	529

Size	RC1	RC2	Oil Qty. (L)	Wt. (kg) *)
9015	3/4"	3/4"	5	125
9025	3/4"	3/4"	7	170
9030	3/4"	3/4"	9	235
9035	3/4"	3/4"	12	255
9040	1"	1"	18	345
9050	1"	1"	22	485
9055	1"	1"	31	550

*) Mass of drive unit with motor, add mass of motor flange and mass of motor, shown in table below.

kW	Motor							C							Mass of Motor Mounting Flange (kg)	Mass of Motor(kg)	
	Without Brake			With Brake			MD	9015	9025	9030	9035	9040	9050	9055		Without Brake	With Brake
	MA	MB	MC	MA	MB	MC											
5.5	382	212	315	454	212	315	144	397.5							8.0	43	54
7.5	415	251	315	510	251	315	185	397.5	427.5						8.0	57	77
11	480	251	350	575	251	350	188	427.5	457.5	515.5					10.9	76	96
15	545	324	350	700	324	350	232	427.5	457.5	515.5	515.5				10.9	131	175
18.5	625	394	400	835	394	400	297	427.5	457.5	515.5	515.5	555.5			16.6	213	258
22	625	394	400	835	394	400	297	427.5	457.5	515.5	515.5	555.5			16.6	213	258
30	625	394	400	835	394	400	297		457.5	515.5	515.5	555.5	589.5	589.5	16.6	224	280
37	715.5	394	450	930.5	394	450	297		487.5	545.5	545.5	585.5	619.5	619.5	14.5	259	320
45	715.5	394	450	930.5	394	450	297				545.5	585.5	619.5	619.5	14.5	259	320
55	769.5	484	550	-	-	-	412					585.5	619.5	619.5	29.4	276	-
75	799	490	545	-	-	-	485						619.5	619.5	30.9	490	-
90	799	490	545	-	-	-	485							619.5	30.9	540	-

Size	Solid Shaft									Hollow Shaft (Shrink Disk Type)					Hollow Shaft (Key Type)			
	TU1	T1	U1	V1	W1/Depth	Key				TU2	T2	U2	V2	V3	TU4	T4	U4	V4
						X1	Y1	Z1	L1									
9015	245	135	110	58m6	M20/42	18	7	11	95	328	193	135	63	60	270	135	135	55
9025	285	145	140	70m6	M20/42	20	7.5	12	125	358	213	145	73	70	300	150	150	65
9030	330	160	170	80m6	M20/42	22	9	14	150	393	233	160	83	80	330	165	165	75
9035	330	160	170	90m6	M20/42	25	9	14	150	403	243	160	88	85	330	165	165	85
9040	349	179	170	95m6	M24/50	25	9	14	150	448	268	180	98	95	360	180	180	90
9050	411	201	210	110m6	M24/50	28	10	16	190	503	303	200	108	105	410	205	205	105
9055	411	201	210	120m6	M24/50	32	11	18	185	528	323	205	123	120	410	205	205	115

Units : mm

Nomenclature

P V A [ ] P 2 - [ ] [ ] - [ ]

Size: 9015, 9025, 9030, 9035, 9040, 9050, 9055

Shaft Arrangement: RJL, RJR

Low Speed Shaft Type:
- (blank) : Solid Shaft
- T : Hollow shaft (Shrink Disk type)
- K : Hollow shaft (Key type)

Nominal Reduction Ratio

Size	6.3	7.1	8	9	10	11.2	12.5	14	16	18	20	22.4
9015	O	O	O	O	O	O	O	O	O	O		
9025	O	O	O	O	O	O	O	O	O	O		
9030	O	O	O	O	O	O	O	O	O	O		
9035			O	O	O	O	O	O	O	O	O	O
9040	O	O	O	O	O	O	O	O	O	O		
9050	O	O	O	O	O	O	O	O	O	O		
9055			O	O	O	O	O	O	O	O	O	O

Air Breather, Air Vent, Oil Fill, Drain Plug, Dip Stick, Oil Gauge, Inspection Cover, Oil Pump, Backstop (Option), Opposite Side

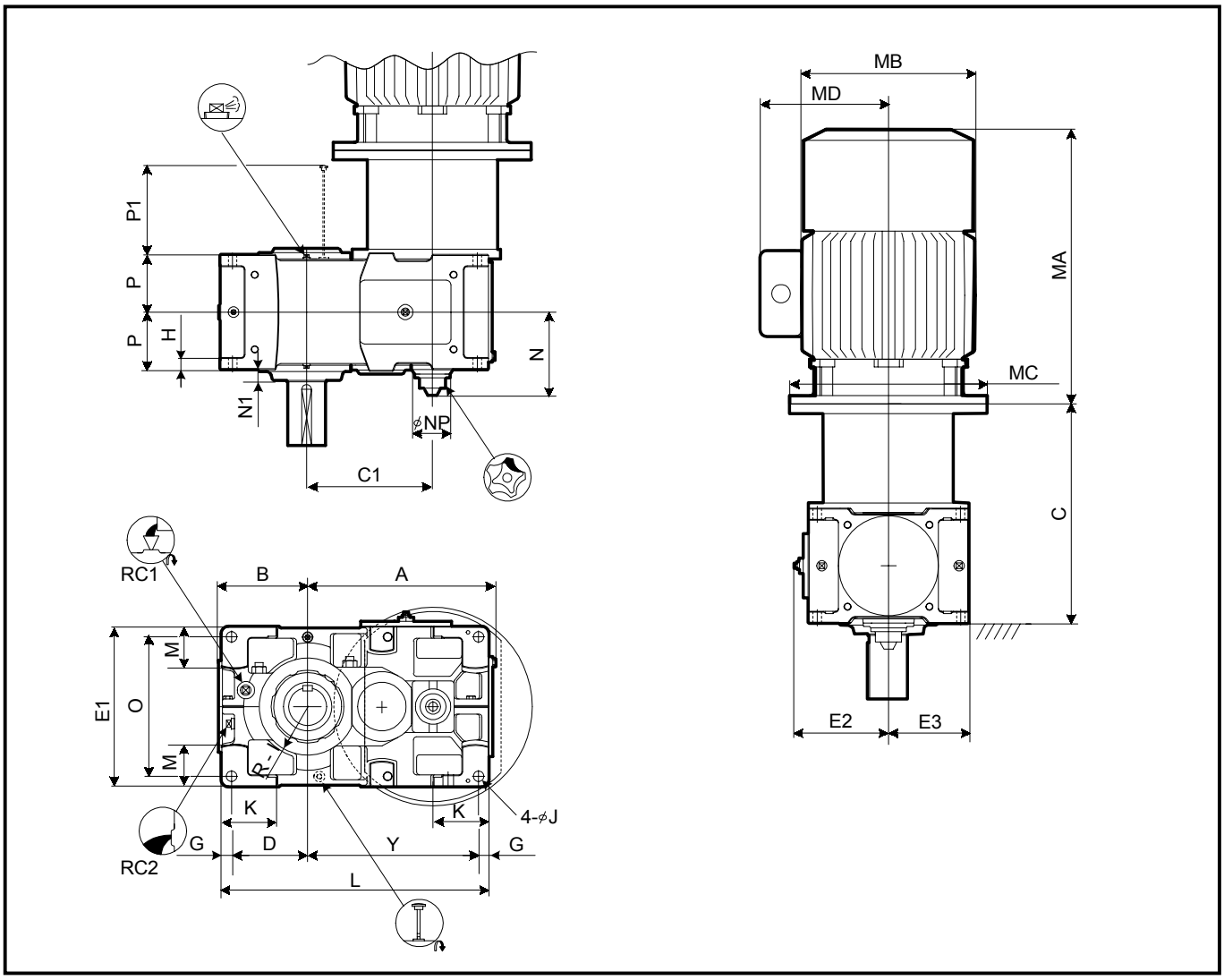

Slow Speed Shaft

Solid Shaft	Hollow Shaft (Shrink Disk Type)	Hollow Shaft (KeyType)
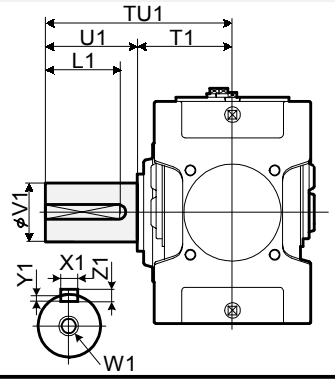	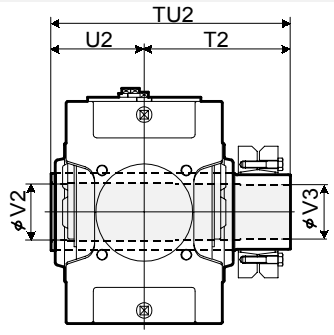	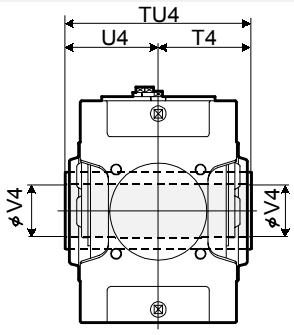
	Refer to the page D-18 for details.	Refer to the page D -19 for details.

Standard Shaft Arrangement Configuration

RJL	RJR
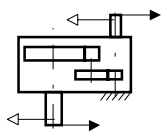	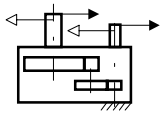

1.Key and keyways are based on ISO R773-1969 Close keys(JIS B1301-1996 Parallel key in fastening type)
2.The oil quantity is approximate.Oil shall be supplied within the range shown on the oil gauge.
3. Refer to the page D - 14 for dimensions not shown in these drawings.
4. Refer to the page D - 28 for the dimension of optional parts.
5. Refer to the page D - 33 for motor terminal box position.
6. Refer to the page D - 34 for flange dimension.

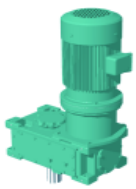

Size	A	B	C1	C	D	E1	E2	E3	G	H	I	J	K	L	M	N	N1	NP	O	P	P1	Y
9060	621	291	414	See below	251	530	313	265	35	35	160	35	180	885	140	275	35	117	460	190	223	564
9070	719	328	482		283	600	348	300	40	40	175	42	215	1020	155	300	38	117	520	215	253	657
9075	772	375	535		330	670	383	335	40	52	190	42	220	1120	195	300	40	117	590	215	253	710
9080	812	370	556		325	670	383	335	40	52	190	42	220	1155	170	320	45	117	590	230	283	750
9085	868	414	612		369	750	423	375	40	52	215	42	220	1255	210	320	40	117	670	230	283	806

Size	RC1	RC2	Oil Qty. (L)	Wt. (kg) *)
9060	1"	1"	25	705
9070	1"	1"	39	985
9075	1"	1"	49	1245
9080	1"	1"	54	1380
9085	1"	1"	71	1650

*) Mass of drive unit with motor, add mass of motor flange and mass of motor, shown in table below.

kW	Motor							C					Mass of Motor Mounting Flange (kg)	Mass of Motor(kg)	
	Without Brake			With Brake			MD	9060	9070	9075	9080	9085		Without Brake	With Brake
	MA	MB	MC	MA	MB	MC									
37	715.5	394	450	930.5	394	450	297	694					14.5	259	320
45	715.5	394	450	930.5	394	450	297	694					14.5	259	320
55	769.5	484	550	-	-	-	412	694					29.4	276	-
75	799	490	545	-	-	-	485	694	744	744			30.9	490	-
90	799	490	545	-	-	-	485	694	744	744			30.9	540	-
110	898	550	655	-	-	-	515		774	774	838	838	55.9	675	-

Size	Solid Shaft									Hollow Shaft(Shrink Disk Type)					Hollow Shaft(Key Type)			
	TU1	T1	U1	V1	W1/Depth	Key				TU2	T2	U2	V2	V3	TU4	T4	U4	V4
						X1	Y1	Z1	L1									
9060	440	230	210	125m6	M24/50	32	11	18	185	583	353	230	128	125	470	235	235	125
9070	509	259	250	145m6	M30/60	36	12	20	225	644	384	260	148	145	530	265	265	145
9075	562	262	300	160m6	M30/60	40	13	22	275	651	386	265	158	155	530	265	265	150
9080	582	282	300	165m6	M30/60	40	13	22	275	714	429	285	173	170	570	285	285	165
9085	585	285	300	175m6	M30/60	45	15	25	270	714	429	285	183	180	570	285	285	175

Units : mm

Nomenclature

P V D [ ] P 2 - [ ] [ ] - [ ]

Size: 9060, 9070, 9075, 9080, 9085

Shaft Arrangement: RJL, RJR

Low Speed Shaft Type:
- (blank) : Solid Shaft
- T : Hollow shaft (Shrink Disk type)
- K : Hollow shaft (Key type)

Nominal Reduction Ratio

Size	6.3	7.1	8	9	10	11.2	12.5	14	16	18	20	22.4
9060	O	O	O	O	O	O	O	O	O	O		
9070	O	O	O	O	O	O	O	O	O	O		
9075			O	O	O	O	O	O	O	O	O	O
9080	O	O	O	O	O	O	O	O	O	O		
9085			O	O	O	O	O	O	O	O	O	O

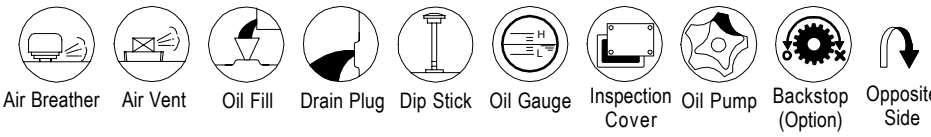

Air Breather, Air Vent, Oil Fill, Drain Plug, Dip Stick, Oil Gauge, Inspection Cover, Oil Pump, Backstop (Option), Opposite Side

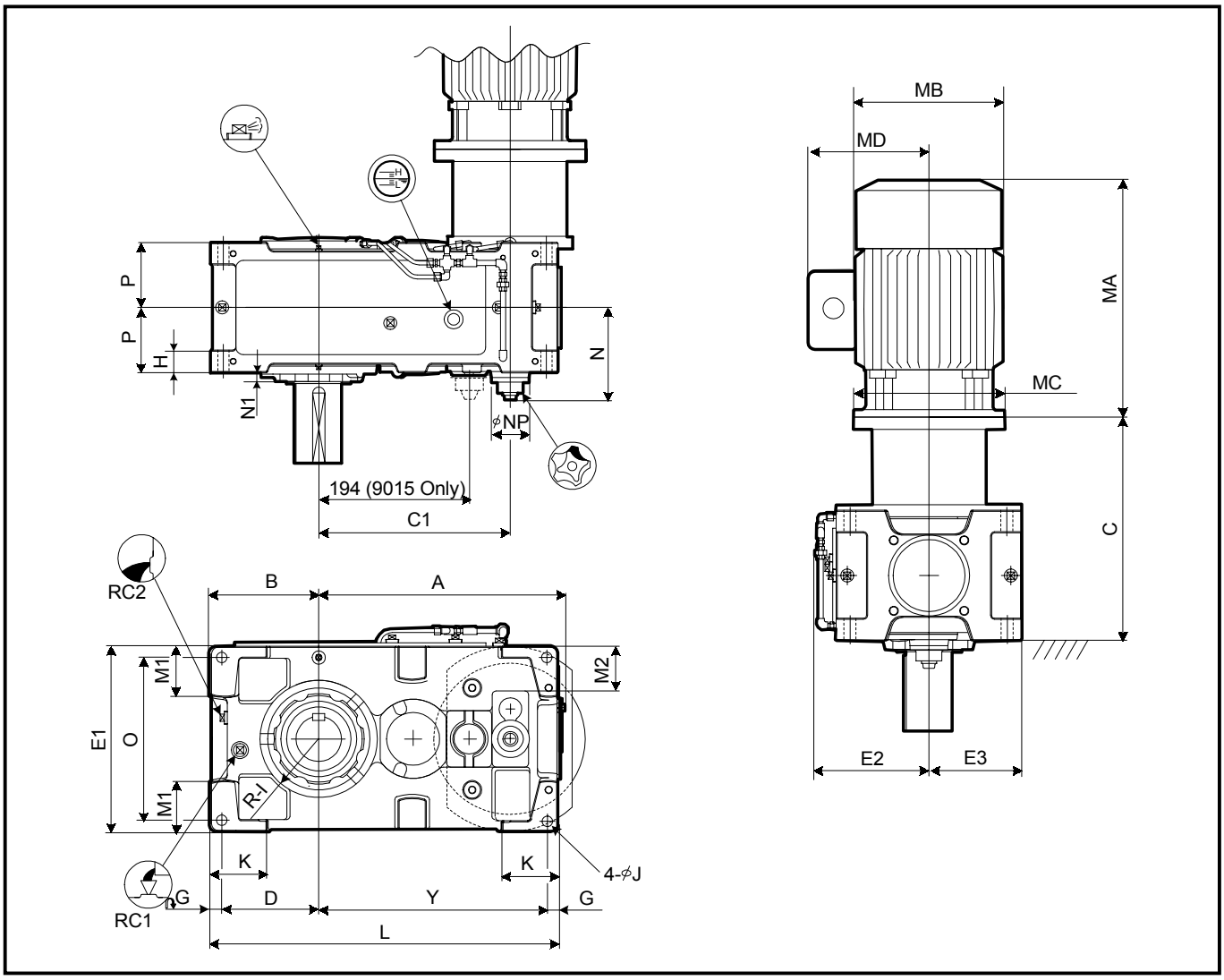

Slow Speed Shaft

Solid Shaft	Hollow Shaft (Shrink Disk Type)	Hollow Shaft (KeyType)
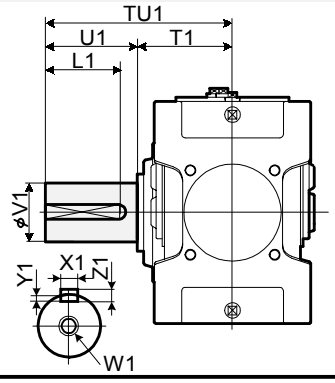	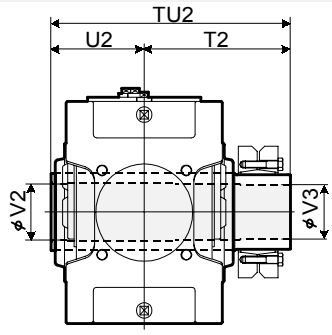	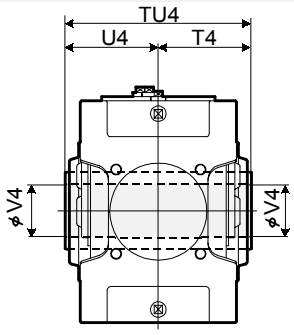
	Refer to the page D-18 for details.	Refer to the page D -19 for details.

Standard Shaft Arrangement Configuration

RJL	RJR
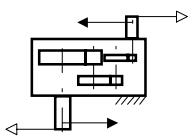	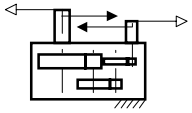

1.Key and keyways are based on ISO R773-1969 Close keys(JIS B1301-1996 Parallel key in fastening type)
2.The oil quantity is approximate.Oil shall be supplied within the range shown on the oil gauge.
3. Refer to the page D - 13for dimensions not shown in these drawings.
4. Refer to the page D - 25 for the dimension of optional parts.
5. Refer to the page D - 33 for motor terminal box position.
6. Refer to the page D - 34 for flange dimension.

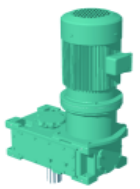

Size	A	B	C1	C	D	E1	E2	E3	G	H	I	J	K	L	M1	M2	N	N1	NP	O	P	Y
9015	338	160	257	See below	140	270	195	135	20	35	80	15	95	485	70	80	183	25	100	230	102.5	305
9025	408	175	306		155	310	215	155	20	40	87.5	19	110	570	75	90	195	23	100	270	117.5	375
9030	453	200	343		175	320	220	160	25	50	105	24	120	640	85	50	208	22	100	270	132.5	415
9035	489	219	374		194	370	245	185	25	50	120	24	120	690	100	75	208	22	100	320	132.5	446
9040	540	235	398		205	400	260	200	30	60	120	28	150	759	100	70	225	15	100	340	157.5	494
9050	609	255	467		225	420	270	210	30	60	140	28	150	848	110	83	245	23	100	360	172.5	563
9055	648	286	506		256	490	305	245	30	60	155	28	150	918	135	118	245	23	100	430	172.5	602

Size	RC1	RC2	Oil Qty. (L)	Wt. (kg) *)
9015	3/4"	3/4"	6	125
9025	3/4"	3/4"	8	175
9030	3/4"	3/4"	10	235
9035	3/4"	3/4"	14	260
9040	1"	1"	18	340
9050	1"	1"	25	490
9055	1"	1"	35	555

*) Mass of drive unit with motor, add mass of motor flange and mass of motor, shown in table below.

kW	Motor							C							Mass of Motor Mounting Flange (kg)	Mass of Motor(kg)	
	Without Brake			With Brake			MD	9015	9025	9030	9035	9040	9050	9055		Without Brake	With Brake
	MA	MB	MC	MA	MB	MC											
5.5	382	212	315	454	212	315	144	376.5	405.5	457.5	457.5	497.5			8.0	43	54
7.5	415	251	315	510	251	315	185	376.5	405.5	457.5	457.5	497.5	510.5	510.5	8.0	57	77
11	480	251	350	575	251	350	188	406.5	435.5	487.5	487.5	527.5	590.5	590.5	10.9	76	96
15	545	324	350	700	324	350	232	406.5	435.5	487.5	487.5	527.5	590.5	590.5	10.9	131	175
18.5	625	394	400	835	394	400	297		435.5	487.5	487.5	527.5	590.5	590.5	16.6	213	258
22	625	394	400	835	394	400	297		435.5	487.5	487.5	527.5	590.5	590.5	16.6	213	258
30	625	394	400	835	394	400	297			487.5	487.5	527.5	590.5	590.5	16.6	224	280
37	715.5	394	450	930.5	394	450	297				517.5	557.5	620.5	620.5	14.5	259	320
45	715.5	394	450	930.5	394	450	297					557.5	620.5	620.5	14.5	259	320
55	769.5	484	550	-	-	-	412						620.5	620.5	29.4	276	-

Size	Solid Shaft									Hollow Shaft(Shrink Disk Type)					Hollow Shaft(Key Type)			
	TU1	T1	U1	V1	W1/Depth	Key				TU2	T2	U2	V2	V3	TU4	T4	U4	V4
						X1	Y1	Z1	L1									
9015	245	135	110	58m6	M20/42	18	7	11	95	328	193	135	63	60	270	135	135	55
9025	285	145	140	70m6	M20/42	20	7.5	12	125	358	213	145	73	70	300	150	150	65
9030	330	160	170	80m6	M20/42	22	9	14	150	393	233	160	83	80	330	165	165	75
9035	330	160	170	90m6	M20/42	25	9	14	150	403	243	160	88	85	330	165	165	85
9040	349	179	170	95m6	M24/50	25	9	14	150	448	268	180	98	95	360	180	180	90
9050	411	201	210	110m6	M24/50	28	10	16	190	503	303	200	108	105	410	205	205	105
9055	411	201	210	120m6	M24/50	32	11	18	185	528	323	205	123	120	410	205	205	115

Units : mm

Nomenclature

P V A [ ] P 3 - [ ] [ ] - [ ]

Size: 9015, 9025, 9030, 9035, 9040, 9050, 9055

Shaft Arrangement: RJL, RJR

Low Speed Shaft Type:
- (blank) : Solid Shaft
- T : Hollow shaft (Shrink Disk type)
- K : Hollow shaft (Key type)

Nominal Reduction Ratio

Size	20	22.4	25	28	31.5	35.5	40	45	50	56	63	71	80	90
9015	O	O	O	O	O	O	O	O						
9025	O	O	O	O	O	O	O	O						
9030	O	O	O	O	O	O	O	O	O	O	O	O		
9035			O	O	O	O	O	O	O	O	O	O	O	O
9040	O	O	O	O	O	O	O	O	O	O	O	O		
9050	O	O	O	O	O	O	O	O	O	O	O	O		
9055			O	O	O	O	O	O	O	O	O	O	O	O

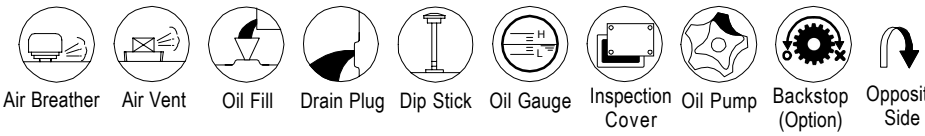

Sumitomo Heavy Industries, Ltd.
http://www.shi.co.jp/ptc

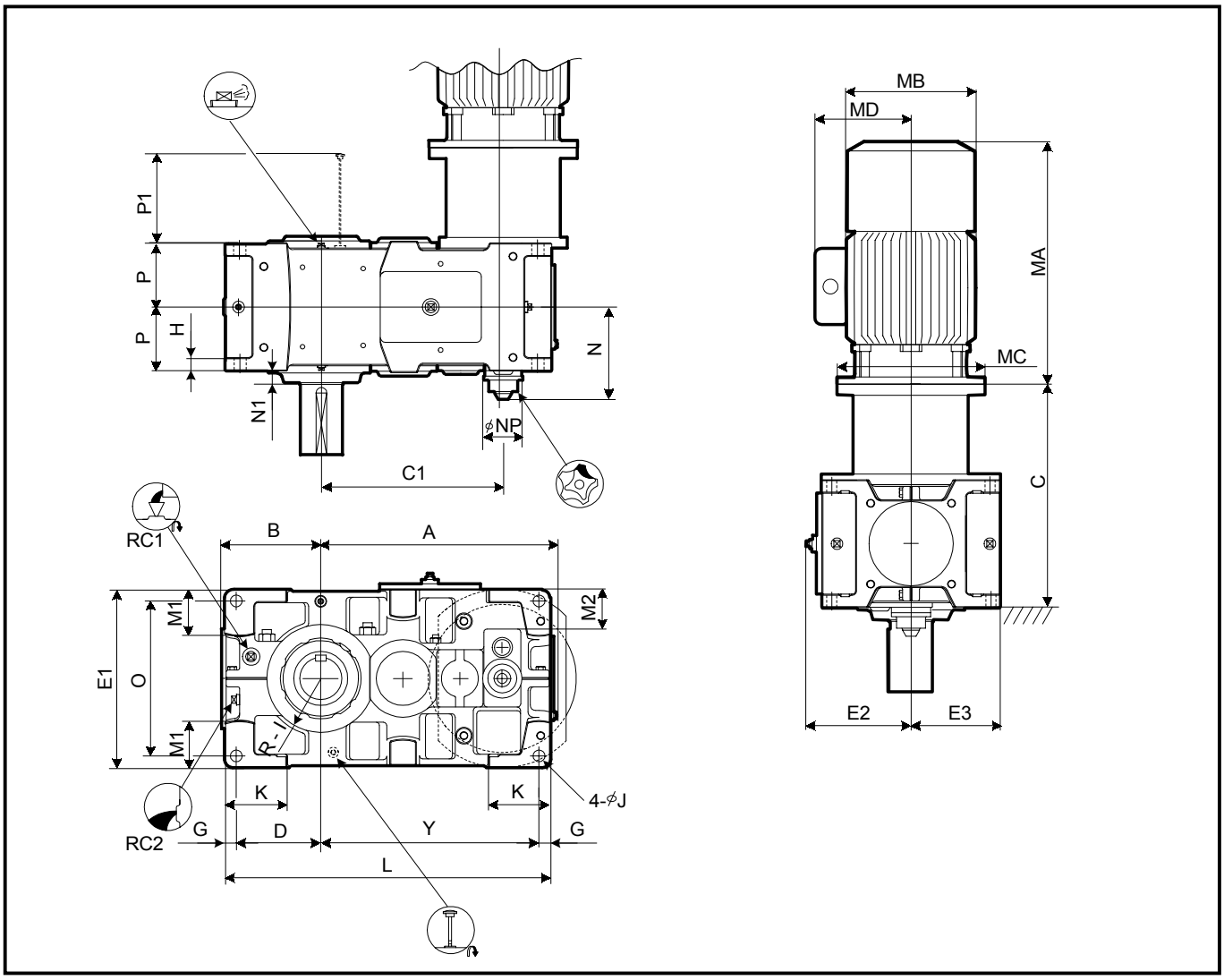

Slow Speed Shaft

Solid Shaft	Hollow Shaft (Shrink Disk Type)	Hollow Shaft (KeyType)
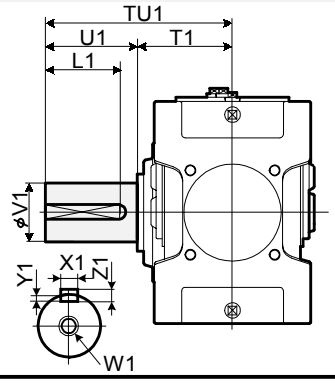	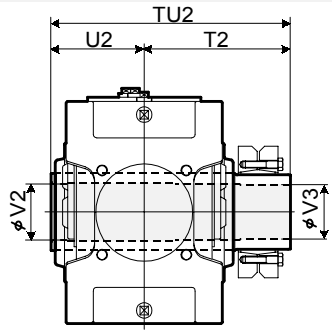	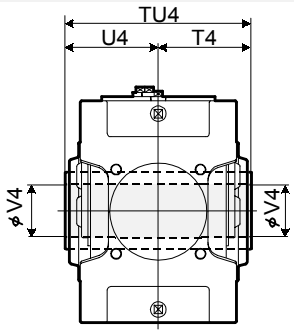
	Refer to the page D-18 for details.	Refer to the page D -19 for details.

Standard Shaft Arrangement Configuration

RJL	RJR
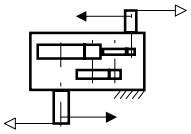	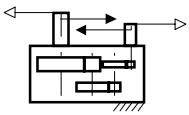

1.Key and keyways are based on ISO R773-1969 Close keys(JIS B1301-1996 Parallel key in fastening type)
2.The oil quantity is approximate.Oil shall be supplied within the range shown on the oil gauge.
3. Refer to the page D - 15 for dimensions not shown in these drawings.
4. Refer to the page D - 28 for the dimension of optional parts.
5. Refer to the page D - 33 for motor terminal box position.
6. Refer to the page D - 34 for flange dimension.

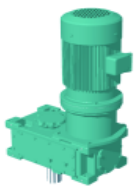

Size	A	B	C1	C	D	E1	E2	E3	G	H	I	J	K	L	M1	M2	N	N1	NP	O	P	P1	Y
9060	701	291	540	See below	251	530	313	265	35	35	160	35	180	970	140	118	275	35	117	460	190	223	649
9070	809	328	630		283	600	348	300	40	40	175	42	215	1115	155	128	300	38	117	520	215	253	752
9075	862	375	683		330	670	383	335	40	52	190	42	220	1215	195	163	300	40	117	590	215	253	805
9080	932	370	725		325	670	383	335	40	52	190	42	220	1275	170	140	320	45	117	590	230	283	870
9085	988	414	781		369	750	423	375	40	52	215	42	220	1375	210	180	320	40	117	670	230	283	926

Size	RC1	RC2	Oil Qty. (L)	Wt. (kg) *)
9060	1"	1"	32	730
9070	1"	1"	53	1030
9075	1"	1"	67	1255
9080	1"	1"	65	1460
9085	1"	1"	89	1730

*) Mass of drive unit with motor, add mass of motor flange and mass of motor, shown in table below.

kW	Motor							C					Mass of Motor Mounting Flange (kg)	Mass of Motor(kg)	
	Without Brake			With Brake			MD	9060	9070	9075	9080	9085		Without Brake	With Brake
	MA	MB	MC	MA	MB	MC									
11	480	251	350	575	251	350	188	633					10.9	76	96
15	545	324	350	700	324	350	232	633					10.9	131	175
18.5	625	394	400	835	394	400	297	633	683	683			16.6	213	258
22	625	394	400	835	394	400	297	633	683	683			16.6	213	258
30	625	394	400	835	394	400	297	633	683	683	749	749	16.6	224	280
37	715.5	394	450	930.5	394	450	297	663	713	713	779	779	14.5	259	320
45	715.5	394	450	930.5	394	450	297	663	713	713	779	779	14.5	259	320
55	769.5	484	550	-	-	-	412	663	713	713	779	779	29.4	276	-
75	799	490	545	-	-	-	485	663	713	713	779	779	30.9	490	-
90	799	490	545	-	-	-	485		713	713	779	779	30.9	540	-
110	898	550	655	-	-	-	515			743	809	809	55.9	675	-

Size	Solid Shaft									Hollow Shaft(Shrink Disk Type)					Hollow Shaft(Key Type)			
	TU1	T1	U1	V1	W1/Depth	Key				TU2	T2	U2	V2	V3	TU4	T4	U4	V4
						X1	Y1	Z1	L1									
9060	440	230	210	125m6	M24/50	32	11	18	185	583	353	230	128	125	470	235	235	125
9070	509	259	250	145m6	M30/60	36	12	20	225	644	384	260	148	145	530	265	265	145
9075	562	262	300	160m6	M30/60	40	13	22	275	651	386	265	158	155	530	265	265	150
9080	582	282	300	165m6	M30/60	40	13	22	275	714	429	285	173	170	570	285	285	165
9085	585	285	300	175m6	M30/60	45	15	25	270	714	429	285	183	180	570	285	285	175

Units : mm

Nomenclature

P V D [ ] P 3 - [ ] [ ] - [ ]

Size: 9060, 9070, 9075, 9080, 9085

Shaft Arrangement: RJL, RJR

Low Speed Shaft Type:
- (blank) : Solid Shaft
- T : Hollow shaft (Shrink Disk type)
- K : Hollow shaft (Key type)

Nominal Reduction Ratio

Size	20	22.4	25	28	31.5	35.5	40	45	50	56	63	71	80	90
9060	O	O	O	O	O	O	O	O	O	O	O	O		
9070	O	O	O	O	O	O	O	O	O	O	O	O		
9075			O	O	O	O	O	O	O	O	O	O	O	O
9080	O	O	O	O	O	O	O	O	O	O	O	O		
9085			O	O	O	O	O	O	O	O	O	O	O	O

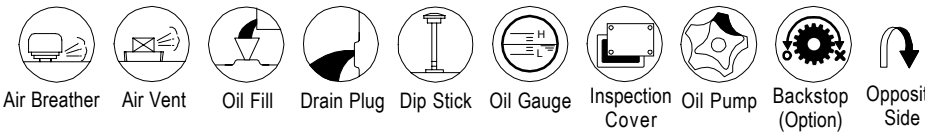

Sumitomo Heavy Industries, Ltd.
http://www.shi.co.jp/ptc

Drive Unit Right Angle Shaft

Nominal Reduction Ratio	Size of Reducer									
	9030	9035	9040	9050	9055	9060	9070	9075	9080	9085
6.3	6.378		6.111							
7.1	6.875		6.973							
8	8.118	7.950	7.778							
9	8.750	8.643	8.875							
10	10.303	10.118	9.608							
11.2	11.106	11.000	10.963							
12.5	12.756	12.842	12.222							
14	13.750	13.962	13.946							
16	15.879	15.899	15.556							
18	17.135	17.286	17.750							
20	20.091	19.814	19.620	19.790		19.181	19.950			
22.4	21.656	21.542	22.388	22.530		22.351	22.353			
25	25.137	25.041	24.444	25.935	24.662	25.137	24.938	24.700		
28	27.096	27.225	27.893	29.526	27.706	29.291	27.941	27.718		
31.5	32.455	31.331	31.694	31.969	32.319	30.157	31.129	30.875		
35.5	34.983	34.063	36.165	36.395	36.309	35.140	34.879	34.647		
40	40.607	40.451	39.487	41.895	39.838	39.520	38.912	38.541		
45	43.770	43.979	45.058	47.695	44.756	46.051	43.599	43.250		
50	51.141	50.611	49.942	51.869	52.207	50.273	49.500	48.176		
56	55.125	55.025	56.987	59.051	58.652	58.582	55.462	54.062		
63	63.986	63.741	62.222	64.640	64.637	63.984	63.000	61.286		
71	68.971	69.300	71.000	73.590	72.617	74.559	70.588	68.773		
80		79.751	77.989	79.341	80.552	78.377	78.120	78.000	79.124	
90		86.706	88.991	90.326	90.496	91.330	87.529	87.529	87.269	
100			99.259	103.98	98.871	102.71	97.650	96.720	96.444	96.432
112			113.26	118.37	111.08	119.69	109.41	108.54	106.37	105.89
125			122.72	130.09	129.57	127.97	127.97	120.90	126.39	117.54
140			140.03	148.10	145.56	149.12	143.38	135.67	139.40	129.07
160				158.68	162.11	156.75	152.99	158.44	158.25	154.04
180				180.65	182.13	182.66	171.41	177.79	174.54	169.14
200				207.95	197.74	205.42	191.23	189.41	192.89	192.86
224				236.74	222.15	239.37	214.27	212.55	212.75	211.77
250				260.18	259.14	255.94	250.61	236.76	252.78	235.08
280				296.20	291.13	298.24	280.79	265.69	278.80	258.13
315				315.95	324.22	332.51	322.08	310.27	318.63	308.07
355				367.08	364.25	369.46	343.56	348.18	355.25	338.28
400					388.53			399.38		386.60
450					451.41			426.01		431.03

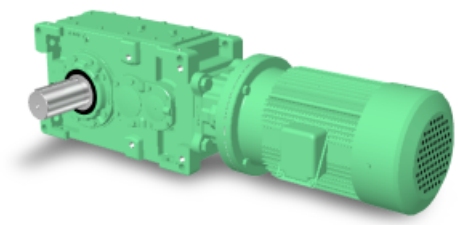

Drive Unit Parallel Shaft

Nominal Reduction Ratio	Size of Reducer											
	9015	**9025**	**9030**	**9035**	**9040**	**9050**	**9055**	**9060**	**9070**	**9075**	**9080**	**9085**
6.3	6.257	6.193	6.314		6.049	6.470		6.188	6.246		6.429	
7.1	7.237	7.067	6.806		6.903	7.366		7.210	6.998		7.090	
8	7.889	7.616	8.118	7.869	7.778	7.956	8.062	7.875	8.033	7.733	8.167	7.835
9	9.125	8.690	8.750	8.556	8.875	9.057	9.058	9.176	9.000	8.677	9.007	8.603
10	10.143	9.722	9.944	10.118	9.528	10.156	9.914	9.750	9.665	9.945	9.905	9.953
11.2	11.732	11.094	10.719	11.000	10.872	11.562	11.138	11.361	10.829	11.160	10.924	10.929
12.5	12.710	12.407	12.785	12.394	12.485	12.594	12.656	12.206	12.600	11.966	12.762	12.071
14	14.701	14.158	13.781	13.475	14.247	14.337	14.219	14.224	14.118	13.428	14.076	13.255
16	15.778	15.340	15.997	15.935	15.556	16.504	15.694	15.996	15.750	15.600	15.556	15.554
18	18.250	17.503	17.243	17.325	17.750	18.789	17.631	18.640	17.647	17.506	17.157	17.078
20	19.894	19.681	20.280	19.938	19.884	19.590	20.566	18.987	20.067	19.500	20.054	18.958
22.4	23.011	22.457	21.860	21.676	22.689	22.303	23.105	22.125	22.484	21.882	22.119	20.817
25	24.696	24.332	25.374	25.277	24.774	25.673	24.413	24.883	25.083	24.844	24.444	24.441
28	28.565	27.764	27.350	27.481	28.269	29.227	27.426	28.995	28.105	27.880	26.961	26.838
31.5	31.401	31.905	32.876	31.625	31.213	30.855	31.992	29.905	31.500	31.056	31.601	29.792
35.5	36.321	36.406	35.438	34.383	35.617	35.127	35.942	34.848	35.294	34.850	34.854	32.712
40	38.980	39.444	41.134	40.976	38.889	40.435	38.450	39.190	39.375	39.000	38.519	38.514
45	45.088	45.009	44.338	44.550	44.375	46.033	43.197	45.667	44.118	43.765	42.484	42.289
50			51.141	51.268	49.248	49.634	50.388	48.825	51.188	48.750	51.845	46.944
56			55.125	55.739	56.195	56.507	56.608	56.894	57.353	54.706	57.182	51.547
63			63.986	63.741	61.358	65.045	61.852	63.984	63.984	63.375	63.194	63.186
71			68.971	69.300	70.014	74.051	69.488	74.559	71.691	71.118	69.700	69.381
80				79.751			81.056			79.219		77.018
90				86.706			91.063			88.897		84.569

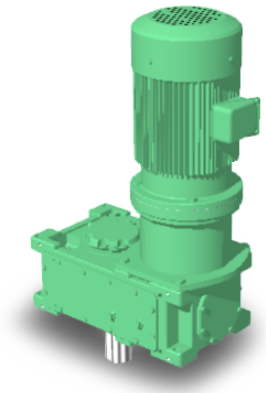

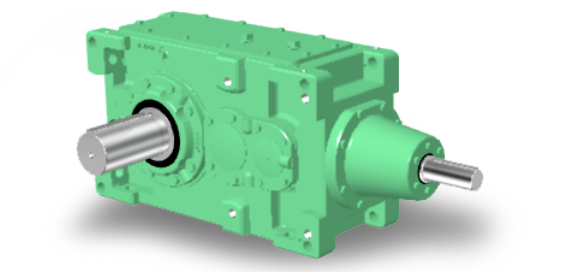

< Reducer : Right Angle Shaft Horizontal Mounting >

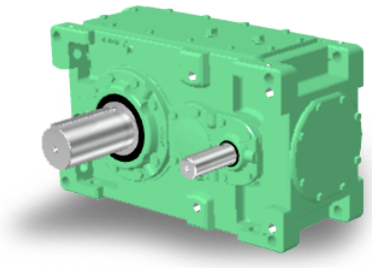

< Reducer : Parallel Shaft Horizontal Mounting >

C

Reducer

Standard Specifications	C- 2
Construction Drawing	C- 3
Nomenclature	C- 4
Selection Flowchart and formula for Selection	C- 6
Service Factor	C- 8
Right Angle Shaft	C- 11
Parallel Shaft	C-105

Standard Specifications

Item		Standard Specification		
		Mounting	High Speed Shaft Speed	
Reducer	Lubrication Method	Horizontal Shaft	750～1800r/min	Oil bath lubricaiton In case of high speed shaft speed is less than 750r/min, electric pump lubrication may be used. Consult SUMITOMO for details.
		Vertical Shaft	400～1800r/min	Pump lubrication (Two different pump lubrication systems are available; shaft connected pump lubrication and electric pump lubrication. For details, refer to the outside dimension drawing.)
		Upright Shaft	750～1800r/min	Oil bath lubricaiton Grease lubrication for right angle input shaft.
	Lubricant	Refer to the page D-2		
	Gear Type	Involute external gear		
Ambient Conditions	Installation location	Indoor (Minimal dust and humidity)		
	Ambient temperature	－10℃～40℃ A cooling fan may provided depending on the usage (Note 1)		
	Ambient humidity	under 85%		
	Elevation	under 1,000 meters		
	Atmosphere	Well ventilated location, free of corrosive gases, explosive gases, vapors and dust.		
Installation		Horizonal installation Refer to the page D-2		
Method of coupling with driven machine		Coupling, gears, chain sprocket or belt.		
Painting		Surface preparation : Shot blasting after washing before machining Inside painting : UNI GROUND PTC primer is sprayed once Outside painting : For prime-coating, UNI GROUND PTC primer is sprayed once. For final coating, NEO ALKYS is sprayed once. Painting color : MANSEL 5G 6/4.5. Refer to the page D-3.		

Note 1:In general, a heating or cooling system is necessary in case the ambient temperature is lower than -10℃ or higher than +50℃.

Construction Drawaing

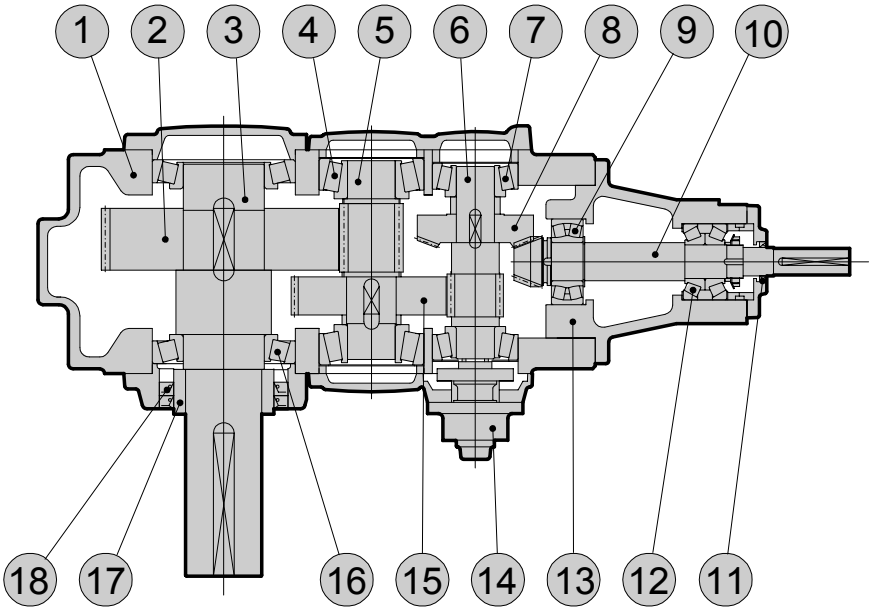

< Reducer : Right Angle Triple Reduction >

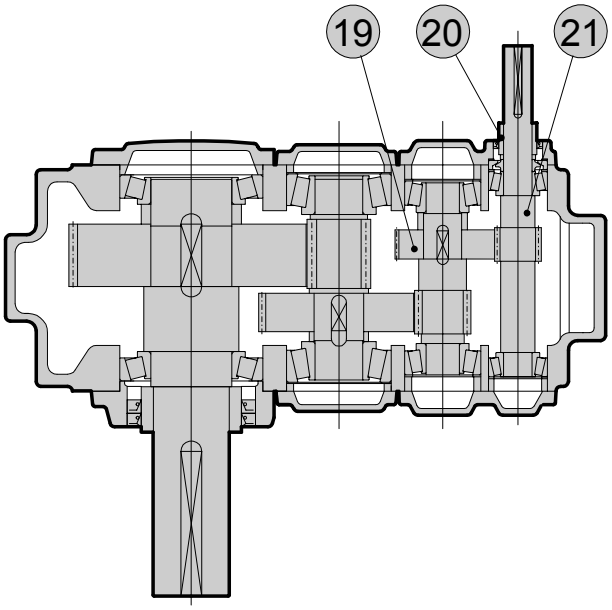

< Reducer : Parallel Shaft Triple Reduction >

Ref. No.	Part Name	Ref. No.	Part Name	Ref. No.	Part Name	Ref. No.	Part Name
1	Housing	7	Taper roller bearing	13	Bearing housing	19	Helical gear
2	Helical gear	8	Bevel gear	14	Oil pimp	20	Collar
3	Slow speed shaft	9	Spherical roller bearing	15	Helical ger	21	Helical pinion shaft
4	Taper roller bearing	10	Bevel pinion shaft	16	Taper roller bearing		
5	Helical pinion shaft	11	Oil seal	17	Collar		
6	Helical pinion shaft	12	Taper roller bearing	18	Oil seal		

Nomenclature

P	H	D	9075	R	3
Series	Mounting	Housing	Size	Shaft Position	Number of Gear Stages

Series	Mounting	Housing	Size	Torque kNm	Shaft Position	Number of Gear Stages
P Paramax	**H** 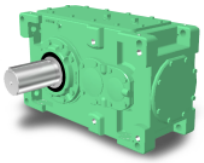 Horizontal	**A** Monoblock	**9015**	2.6	**R** 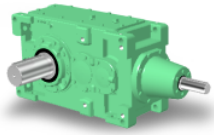 Right Angle	**2** 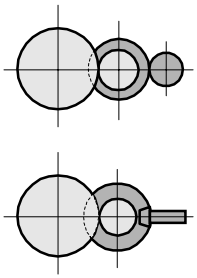 Double Reduction
			9025	4.2		
			9030	6.4		
			9035	8.5		
			9040	10.1		
			9050	15.3		
			9055	19.9		
		D Split	**9060**	24.4		
	V 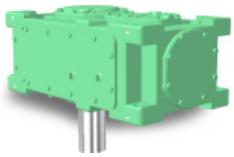 Vertical		**9070**	38.2		**3** 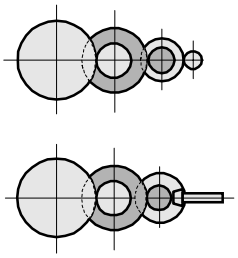 Triple Reduction
			9075	47.8		
			9080	58.5		
			9085	73.1		
			9090	85.9	**P** 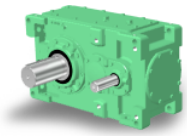 Parallel	
			9095	101		
			9100	122		
			9105	144		
	W 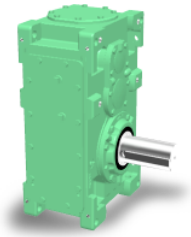 Upright		**9110**	174		**4** 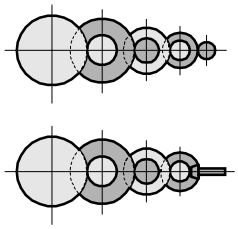 Quadruple Reduction
			9115	207		
			9118	260		
			9121	301		
			9126	351		
			9128	420		
			9131	473		
			9136	552		

1. For shaft arrangement, refer to the dimension sheets.
2.Consult us for redction ratios smaller then 6.3.

[ ] — [RL] [K] [F] — [35.5]

Mounting for Upright	Shaft Arrangement	Slow Speed Shat	Fan	Nominal Ratio
(Blank) 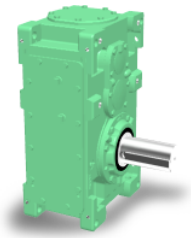	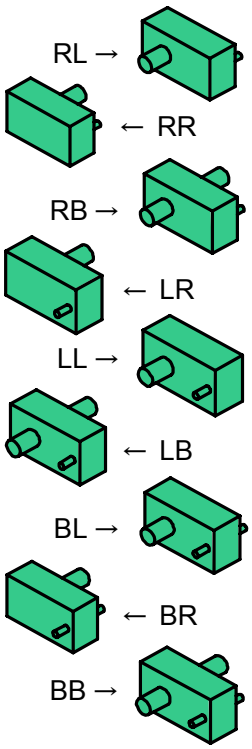	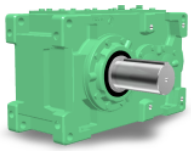 Solid Shaft	**(Blank)** 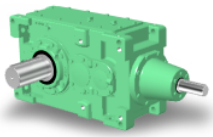 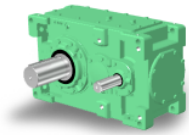 Without fan	Right Angle Shaft 6.3 56 7.1 63 8 71 9 80 10 90 11.2 100 12.5 112 14 125 16 140 18 160 20 180 22.4 200 25 224 28 250 31.5 280 35.5 315 40 355 45 400 50 450
		T 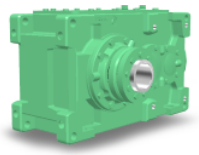 Hollow Shaft (Shrink Disk Type)		
W 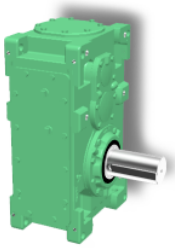 Wall Mount (Upright Mounting)	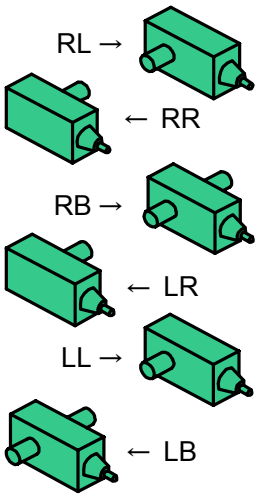	**K** 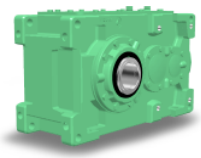 Hollow Shaft (Key Type)	**F** 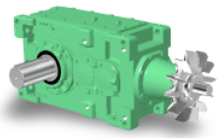 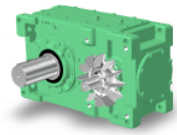 With fan	Parallel Shaft 6.3 56 7.1 63 8 71 9 80 10 90 11.2 100 12.5 112 14 125 16 140 18 160 20 180 22.4 200 25 224 28 250 31.5 280 35.5 315 40 355 45 400 50 450 500

Selection

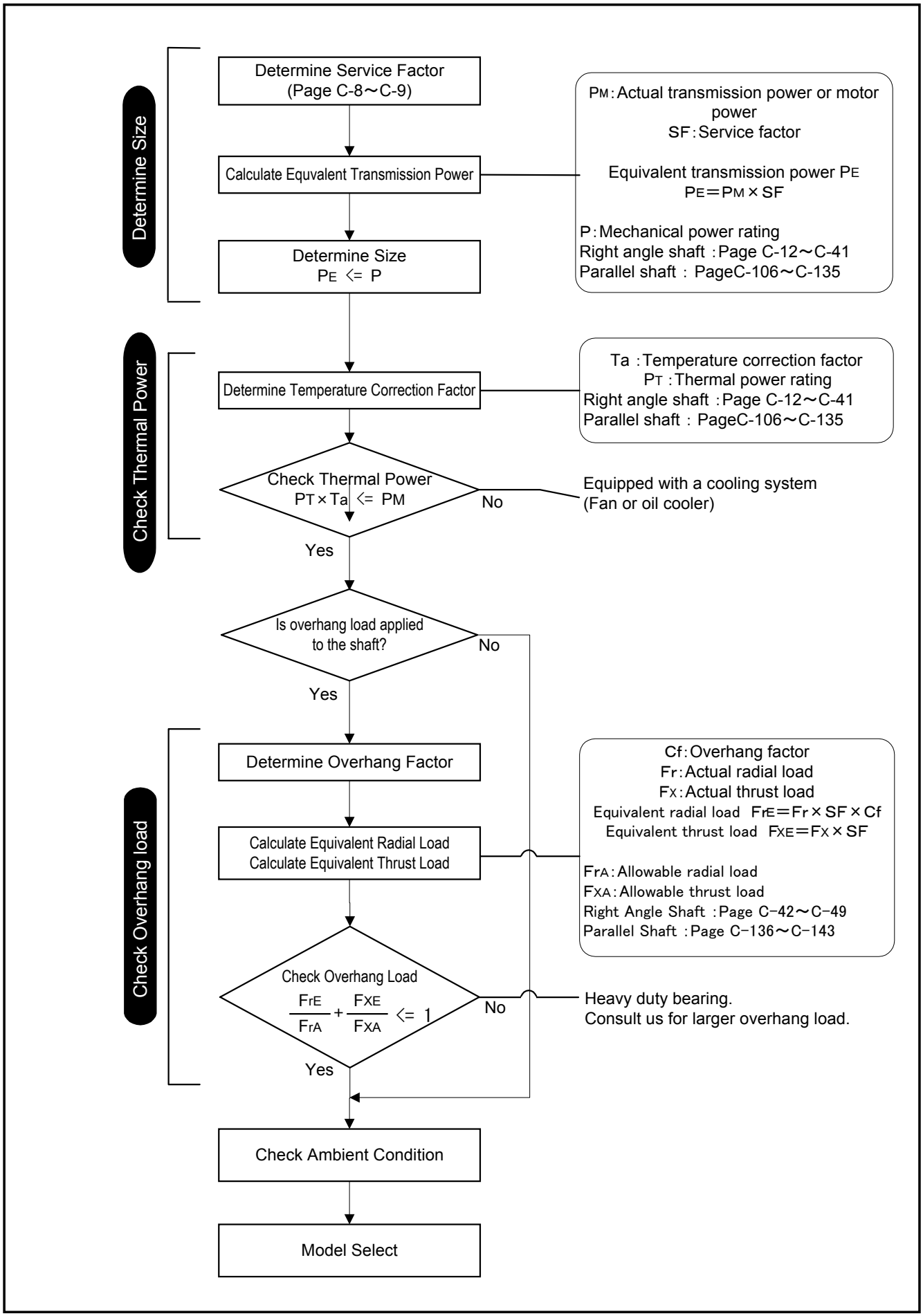
Determine Size
Determine Service Factor
(Page C-8～C-9)
Calculate Equvalent Transmission Power
Determine Size
PE <= P
PM : Actual transmission power or motor power
SF : Service factor
Equivalent transmission power PE
PE = PM × SF
P : Mechanical power rating
Right angle shaft : Page C-12～C-41
Parallel shaft : PageC-106～C-135
Check Thermal Power
Determine Temperature Correction Factor
Ta : Temperature correction factor
PT : Thermal power rating
Right angle shaft : Page C-12～C-41
Parallel shaft : PageC-106～C-135
Check Thermal Power
PT × Ta <= PM
No
Equipped with a cooling system
(Fan or oil cooler)
Yes
Is overhang load applied
to the shaft?
No
Yes
Check Overhang load
Determine Overhang Factor
Calculate Equivalent Radial Load
Calculate Equivalent Thrust Load
Cf : Overhang factor
Fr : Actual radial load
FX : Actual thrust load
Equivalent radial load FrE = Fr × SF × Cf
Equivalent thrust load FXE = FX × SF
FrA : Allowable radial load
FXA : Allowable thrust load
Right Angle Shaft : Page C-42～C-49
Parallel Shaft : Page C-136～C-143
Check Overhang Load
FrE/FrA + FXE/FXA <= 1
No
Heavy duty bearing.
Consult us for larger overhang load.
Yes
Check Ambient Condition
Model Select

Selection Example

○ : Conditions ■ : Selected item		Refernce page No.
○ Load power	: 55 kW	
○ High speed shaft speed	: 1500r/min	
○ Shaft and mounting positions	: Right angle shaft, Horizontal mounting	
Load Condition		
○ Type of load, Operating hours	: Uniform load ¥ 14hours/day	
■ Determine service factor	→ SF = 1.25	C-8 Service Factor
■ Calculate equivalent transmission power	→ PE = 55 × 1.25 = 68.75 kW	
○ Slow speed shaft speed	: 85 r/min	
■ Reduction ratio	→ 1500/85 =17.6	
Select nominal reduction ratio	→ 17.6 → 18	C-4～C-5 Nomenclature
■ Determine size	→ Size 9035, Nominal Reduction Ratio 18 Mechanical power rating P = 86 kW PE ≦ P → OK	C-18 Selection Tables
○ Ambient Temperature	: 40℃	
■ Temperature correction factor without fan	→ Ta = 0.70	C-18 Selection Tables
■ Thermal rating without fan	→ P_T = 48kW → P_T × Ta = 33.6 < 55 = PM → OUT	C-18 Selection Tables
■ Temperature correction factor with fan	→ Ta = 0.73	C-18 Selection Tables
■ Thermal rating with fan	→ P_T = 120kW → P_T × Ta = 87.6 > 55 = PM → OK → With fan	
■ Check dimension		
■ Check shaft arrangement	→ RL	C-50 DImension Tables
■ Check nomenclature	→ PHA9035R2-RLF-18	
Check overhang load		
○ Overhang member	: Sprocket (Single row)	
■ Overhang factor Cf	→ Cf = 1.0	C-42 Allowable External Load
○ Radial load position and direction	: Center of solid shaft, Downward	
○ Radial load Fr	: 8.5 kN	
○ Thrust load Fx	: 1.2 kN	
■ Equivalent radial load FrE	→ FrE = 8.5 × 1.25 × 1.0 = 10.6	
■ Equivalent axial load FrX	→ FrX = 8.5 × 1.25 = 10.6	
■ Allowable radial load	→ 42.2 kN	C-42 Allowable External Load
■ Allowable thrust load	→ 23.1 kN	C-42 Allowable External Load
$\frac{10.6}{42.2} + \frac{10.6}{23.1} = 0.71 < 1$	→ OK	
○ Ambient Condition	: Indoor,Ambient temperature 40℃	C-2 Standard Specifications
■ Check ambient condition	→ OK	
■ Model Selected	→ PHA9035R2-RLF-18	

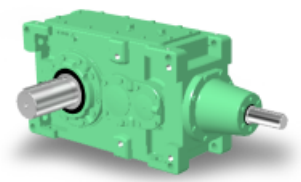

Service Factor SF

Driven Machine	Operating Hours (hours/day) 3hrs	10hrs	24hrs
CRANES			

Classfication of crane	Hoisting	Traverse Motion	Travel Motion	Slewing Motion	Boom Hoisting
Group Ⅰ	1.00	1.50		1.25	1.00
Group Ⅱ	1.25	1.50			1.00
Group Ⅲ	1.50	1.75			1.25
Group Ⅳ	1.75	2.00			1.50

The crane classifi-caiton is based on JIS B8821-1976 "Calculation standard for the structure of crane."

Driven Machine	3hrs	10hrs	24hrs
CONVEYORS(General purpose)			
Uniformly load or fed	1.00	1.00	1.25
Heavy load			
Not uniformly fed	1.00	1.25	1.50
Reciprocating or shaker	1.50	1.75	2.00
ELEVATORS			
Elevators	1.50	1.50	1.50
Escalators	1.25	1.25	1.25
METAL MILLS			
Draw bench carriage and main drive	1.50	1.50	1.50
Runout table			
Non reversing			
Group drives	1.50	1.50	1.50
Individual drives	2.00	2.00	2.00
Reversing	2.00	2.00	2.00
Slab pushers	1.50	1.50	1.50
Shears	2.00	2.00	2.00
Wire drawing	1.25	1.25	1.25
Wire winding machine	1.25	1.50	1.50
METAL STRIP PROCESSING MACHINERY			
Bridles	1.50	1.50	1.50
Coilers & uncoilers	1.00	1.25	1.50
Edge trimmers	1.00	1.25	1.50
Flatteners	1.25	1.25	1.50
Loopers(Accumulators)	1.50	1.50	2.00
Pinch rolls	1.25	1.25	1.50
Scrap choppers	2.00	2.00	2.00
Shears	2.00	2.00	2.00
slitters	1.00	1.25	1.50
MILL, ROTARY TYPE			
Balland rod	2.00	2.00	2.00
Cement Kilns	2.00	2.00	2.00
Kilns(Except cement klins)	1.50	1.50	1.50
Dryers and coolers	1.50	1.50	1.50
SEWAGE DISPOSAL EQUIPMENT			
Aerators	2.00	2.00	2.00
Bar screens	1.25	1.25	1.25
Chemical feeders	1.25	1.25	1.25
Dewatering screens	1.50	1.50	1.50
Scum breakers	1.50	1.50	1.50
Slow or rapid mixers	1.50	1.50	1.50
Sludge collectors	1.25	1.25	1.25
Thickeners	1.50	1.50	1.50
Vacuum filters	1.50	1.50	1.50
EXTRUDERS			
Plastics	1.25	1.25	1.25
Rubber	1.50	1.50	1.50
FEEDERS			
Apron	1.00	1.25	1.50
Belt	1.00	1.25	1.50
Disc	1.00	1.00	1.25
Reciprocating	1.50	1.75	2.00
Screw	1.00	1.25	1.50

Driven Machine	Operating Hours (hours/day) 3hrs	10hrs	24hrs
RUBBER INDUSTRY			
Mixers	1.75	1.75	2.00
Mixing mill -2 smooth rolls	1.50	1.50	1.75
Batch drop mill -2 smooth rolls	1.50	1.50	1.50
Cracker warmer			
-2 roll:1corrugated roll	1.75	1.75	1.75
Cracker -2 corrugated rolls	2.00	2.00	2.00
Holding, feed and blend mill			
-2rolls	1.25	1.25	1.25
Refiner -2rolls	1.50	1.50	1.50
Calenders	1.50	1.50	1.50
PAPER MILL			
All types incl. Paper making machine	2.00	2.00	2.00
AGITATORS AND MIXERS			
Pure liquids	1.00	1.00	1.25
Liquids and solids	1.00	1.25	1.50
Liquids variable density	1.00	1.25	1.50
MIXERS			
Concrete	1.25	1.25	1.50
CRUSHER			
Stone or ore	2.50	2.50	2.50
BLOWERS			
Centrifugal	1.00	1.00	1.25
Lobe	1.00	1.25	1.50
Vane	1.00	1.25	1.50
COMPRESSORS			
Centrifugal	1.00	1.00	1.25
Lobe	1.00	1.25	1.50
Reciprocating:multi cylinder	1.50	1.50	1.75
Reciprocating:single cylinder	1.75	1.75	2.00
FANS			
Centrifugal	1.00	1.00	1.25
Cooling towers	※	※	※
Forced draft	1.25	1.25	1.25
Suction draft	1.50	1.50	1.50
Industrial and mine	1.50	1.50	1.50
PUMPS			
Centrifugal	1.00	1.00	1.25
Screw pump	1.25	1.25	1.50
Gear pump	1.25	1.25	1.50
DREDGES			
Cable reels	1.25	1.25	1.50
Conveyors	1.25	1.25	1.50
Cutter head drive	2.00	2.00	2.00
Pumps	2.00	2.00	2.00
Screen drives	1.75	1.75	2.00
Stackers	1.25	1.25	1.50
Winches	1.25	1.25	1.50
GENERATORS AND EXCITERS	1.00	1.00	1.25
HAMMER MILLS	1.75	1.75	2.00
SUGAR INDUSTRY			
Beet slicer	2.00	2.00	2.00
Cane knives	1.50	1.50	1.50
Crushers	1.50	1.50	1.50
Mills(Slow speed end)	1.75	1.75	1.75

Notes:
(1) Values in the above table are based on AGMA standards and SUMITOMO's experience.
(2) Values in the above table apply for electric motors as prime movers - if prime mover is a multi cylinder combustion engine, 0.25 has to be added to the SF.
(3) Consult us for special duty or when special safety specifications are needed.
(4) ※:For SF, consult us.

Refer to the following for driven machines not shown on the left page.

Prime Mover	Operating Hours	Type of Load		
		Uniform Load	Moderate Shock Load	Heavy Shock Load
		U	M	H
Electric Motor	3hours/day	1.00	1.00	1.50
	10hours/day	1.00	1.25	1.75
	24hours/day	1.25	1.50	2.00
Internal Combustion Engine (multi cyclinder)	3hours/day	1.00	1.25	1.75
	10hours/day	1.25	1.50	2.00
	24hours/day	1.50	1.75	2.25

Notes : Consult us when the operating hours are less than 3 hours/day or when an internal combustion engine (single cylinder) is used.

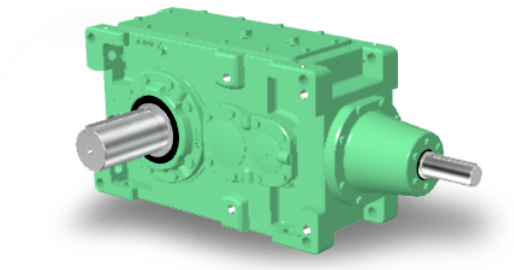

< Reducer : Right Angle Shaft Horizontal Mounting >

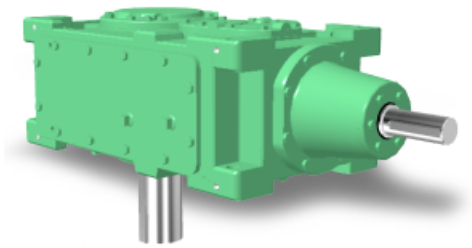

< Reducer : Right Angle Shaft Vertical Mounting >

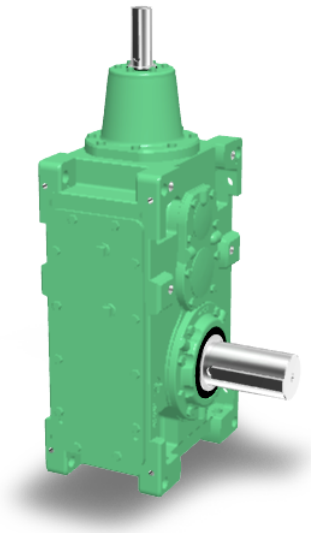

< Reducer : Right Angle Shaft Upright Mounting >

C

Reducer : Right Angle

Selection Tables	C- 12
Allowable Loads	C- 42
Dimension Sheets	C- 50

MECHANICAL POWER RATING (kW)

Nominal Reduction Ratio	H.Speed Shaft Speed r/min	L.Speed Shaft Speed r/min	Size of Reducer													
			9015	9025	9030	9035	9040	9050	9055	9060	9070	9075	9080	9085	9090	9095
6.3	Exact Reduction Ratio		6.265	6.049	6.539		6.405	6.384		6.188	6.188		6.286			
	1800	286	74	98	152		236	334		568	798		1020			
	1500	238	62	81	127		197	279		475	667		857			
	1200	190	49	65	102		158	224		381	535		688			
	1000	159	41	54	85		132	187		318	447		575			
	900	143	37	49	76		119	168		287	403		518			
	750	119	31	41	64		99	141		240	337		433			
7.1	Exact Reduction Ratio		7.246	6.903	7.049		7.309	7.268		7.210	6.933		6.933			
	1800	254	62	98	152		228	334		559	798		1020			
	1500	211	52	81	127		191	279		469	667		857			
	1200	169	42	65	102		153	224		377	535		688			
	1000	141	35	54	85		128	187		316	447		575			
	900	127	31	49	76		116	168		285	403		518			
	750	106	26.5	41	64		97	141		238	337		433			
8	Exact Reduction Ratio		7.889	8.056	8.118	8.150	7.778	8.125		7.875	8.082		8.190			
	1800	225	57	76	140	152	217	340		544	810		1150			
	1500	188	47	63	117	127	181	285		467	705		1010			
	1200	150	38	51	94	102	145	229		374	568		834			
	1000	125	31	42	78	85	120	191		312	476		699			
	900	113	28.6	38	71	76	108	173		280	429		630			
	750	94	23.8	31	59	64	90	144		234	359		528			
Dimension Tables		Horizontal	C-50	C-50	C-50	C-50	C-50	C-50		C-52	C-52		C-52			
		Vertical	C-76	C-76	C-76	C-76	C-76	C-76		C-78	C-78		C-78			
		Upright	C-92	C-92	C-92	C-92	C-92	C-92		C-94	C-94		C-94			

THERMAL POWER RATING (kW)

Nominal Reduction Ratio	H.Speed Shaft Speed r/min	Number of Cooling Fans	Size of Reducer													
			9015	9025	9030	9035	9040	9050	9055	9060	9070	9075	9080	9085	9090	9095
Double Reduction Horizontal Type 6.3 ▼ 8	1800	-	30	39	46	61	73	79		108	138		160			
		1	75	105	124	171	217	233		332	372		561			
	1500	-	31	40	49	64	77	86		118	154		183			
		1	68	95	117	160	203	224		326	369		574			
	1200	-	31	40	50	66	79	90		126	165		200			
		1	60	84	106	145	184	208		307	351		557			
	1000	-	30	39	50	65	78	91		128	169		207			
		1	52	73	94	128	163	186		276	319		511			
	900	-	29	39	50	65	78	91		128	169		209			
		1	48	69	89	121	154	178		265	306		493			
	750	-	28	37	48	63	76	89		127	169		209			
		1	42	60	79	107	137	159		239	278		449			
Double Reduction Vertical Type 6.3 ▼ 8	1800	-	30	39	46	61	73	79		108	138		160			
		1	75	105	124	171	217	233		332	372		561			
	1500	-	31	40	49	64	77	86		118	154		183			
		1	68	95	117	160	203	224		326	369		574			
	1200	-	31	40	50	66	79	90		126	165		200			
		1	60	84	106	145	184	208		307	351		557			
	1000	-	30	39	50	65	78	91		128	169		207			
		1	52	73	94	128	163	186		276	319		511			
	900	-	29	39	50	65	78	91		128	169		209			
		1	48	69	89	121	154	178		265	306		493			
	750	-	28	37	48	63	76	89		127	169		209			
		1	42	60	79	107	137	159		239	278		449			
Double Reduction Upright Type 6.3 ▼ 8	1800	-	24	31	37	49	58	64		86	110		128			
		1	60	84	99	137	174	186		266	297		449			
	1500	-	25	32	39	51	61	69		95	123		146			
		1	54	76	93	128	162	179		260	295		459			
	1200	-	24	32	40	52	63	72		100	132		160			
		1	48	67	85	116	147	166		245	281		446			
	1000	-	24	31	40	52	63	73		102	135		166			
		1	41	58	75	102	130	149		221	255		408			
	900	-	23	31	40	52	62	72		102	136		167			
		1	39	55	71	97	124	142		212	245		395			
	750	-	23	30	39	50	61	71		101	135		167			
		1	34	48	63	86	110	128		191	222		360			

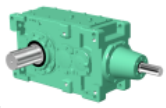

Size of Reducer										L.Speed Shaft Speed r/min	H.Speed Shaft Speed r/min	Nominal Reduction Ratio
9100	9105	9110	9115	9118	9121	9126	9128	9131	9136			
										Exact Reduction Ratio		
										286	1800	6.3
										238	1500	
										190	1200	
										159	1000	
										143	900	
										119	750	
										Exact Reduction Ratio		
										254	1800	7.1
										211	1500	
										169	1200	
										141	1000	
										127	900	
										106	750	
										Exact Reduction Ratio		
										225	1800	8
										188	1500	
										150	1200	
										125	1000	
										113	900	
										94	750	
										Horizontal	Dimension Tables	
										Vertical		
										Upright		

Notes

1. Consult us when the high speed shaft speed is over 1800r/min.
2. When the high speed shaft speed is not shown in the table, find it by the interpolation method.
3. When the high speed shaft speed(N) is lower than 750r/min, find the mechanical power rating(P_N) according to the following formula.

$$P_N = P_{750} \times \frac{N}{750}$$

4. Shown in the table are the ratings for the slow speed shaft.
5. Refer to C42 - C49 for the allowable radial and axial load on each shaft.

Size of Reducer										Number of Cooling Fans	H.Speed Shaft Speed r/min	Nominal Reduction Ratio
9100	9105	9110	9115	9118	9121	9126	9128	9131	9136			
										-	1800	Double Reduction Horizontal Type 6.3 ▼ 8
										1		
										-	1500	
										1		
										-	1200	
										1		
										-	1000	
										1		
										-	900	
										1		
										-	750	
										1		
										-	1800	Double Reduction Vertical Type 6.3 ▼ 8
										1		
										-	1500	
										1		
										-	1200	
										1		
										-	1000	
										1		
										-	900	
										1		
										-	750	
										1		
										-	1800	Double Reduction Upright Type 6.3 ▼ 8
										1		
										-	1500	
										1		
										-	1200	
										1		
										-	1000	
										1		
										-	900	
										1		
										-	750	
										1		

Ambient Temperature °C	Temperature Correction Factor	
	Without Fan	With Fan
20	1.00	1.00
30	0.85	0.87
40	0.70	0.73
50	0.55	0.60

Notes

1. Shown in the table are the ratings for models without a fan cooling unit and those with a fan.
(-:none fan, 1:with a fan, 2:with two fans)
2. The values are applicable to continuous operation at ambient temperatures of 20 C or less. When the temperature in out of the range, refer to the temperature correction factor shown above.
3. When the high speed shaft speed is not shown in the table, find it by interpolation method.

MECHANICAL POWER RATING (kW)

Nominal Reduction Ratio	H.Speed Shaft Speed r/min	L.Speed Shaft Speed r/min	Size of Reducer													
			9015	9025	9030	9035	9040	9050	9055	9060	9070	9075	9080	9085	9090	9095
9	Exact Reduction Ratio		9.125	9.192	8.750	8.861	8.875	9.250	8.938	9.176	9.056	8.597	9.034			9.000
	1800	200	49	76	126	152	188	280	334	443	704	798	1070			1550
	1500	167	41	63	105	127	158	234	279	371	590	667	897			1350
	1200	133	33	51	85	102	127	188	224	298	474	535	722			1120
	1000	111	28.0	42	71	85	106	158	187	250	397	447	605			964
	900	100	25.3	38	64	76	95	142	168	225	358	403	546			882
	750	83	21.1	31	53	64	80	119	141	188	300	337	457			756
10	Exact Reduction Ratio		10.040	9.899	10.303	10.118	10.171	10.000	10.125	9.995	10.125	10.007	9.882	9.982		9.765
	1800	180	43	72	111	143	161	278	351	434	677	810	1000	1150		1460
	1500	150	36	60	92	119	134	232	297	362	567	713	863	1010		1280
	1200	120	29.1	48	74	95	107	187	237	289	456	577	695	867		1060
	1000	100	24.3	40	62	79	89	156	198	241	382	482	582	736		911
	900	90	21.9	36	55	71	80	141	178	217	344	435	525	663		834
	750	75	18.2	30	46	59	67	118	148	181	288	363	439	553		716
11.2	Exact Reduction Ratio		11.614	11.295	11.106	11.000	11.606	11.385	11.375	11.647	11.345	11.229	10.900	10.961		11.382
	1800	161	39	63	100	133	145	229	293	351	565	747	892	1120		1230
	1500	134	33	52	83	111	121	191	245	294	473	626	748	938		1050
	1200	107	26.5	42	67	89	97	154	197	236	381	504	602	756		877
	1000	89	22.1	35	56	75	81	129	165	198	319	421	504	633		752
	900	80	19.9	31	50	67	73	116	149	178	287	380	454	571		688
	750	67	16.7	26.6	42	56	61	97	124	149	240	318	380	478		590
Dimension Tables		Horizontal	C-50	C-50	C-50	C-50	C-50	C-50	C-50	C-52	C-52	C-52	C-52	C-52		C-54
		Vertical	C-76	C-76	C-76	C-76	C-76	C-76	C-76	C-78	C-78	C-78	C-78	C-78		-
		Upright	C-92	C-92	C-92	C-92	C-92	C-92	C-92	C-94	C-94	C-94	C-94	C-94		-

THERMAL POWER RATING (kW)

Nominal Reduction Ratio	H.Speed Shaft Speed r/min	Number of Cooling Fans	Size of Reducer													
			9015	9025	9030	9035	9040	9050	9055	9060	9070	9075	9080	9085	9090	9095
Double Reduction Horizontal Type 9 ▼ 11.2	1800	-	27	36	44	56	69	78	99	109	142	173	164	203		
		1	67	96	118	156	205	227	290	337	382	467	577	715		490
	1500	-	27	36	46	58	71	82	105	116	153	188	183	226		200
		1	59	86	109	144	187	214	274	319	368	452	575	708		538
	1200	-	26	36	46	59	71	84	108	120	160	198	195	242		220
		1	52	76	98	129	166	195	250	292	341	422	543	673		525
	1000	-	26	35	46	58	70	84	108	120	161	200	199	248		210
		1	44	66	85	113	145	173	222	260	305	379	491	610		444
	900	-	25	34	45	57	69	84	108	119	161	200	200	249		210
		1	41	62	81	107	137	164	211	247	291	363	471	586		425
	750	-	24	33	44	56	66	82	105	117	158	198	198	247		190
		1	36	54	71	95	120	146	188	221	261	326	425	531		350
Double Reduction Vertical Type 9 ▼ 11.2	1800	-	27	36	44	56	69	78	99	109	142	173	164	203		
		1	67	96	118	156	205	227	290	337	382	467	577	715		
	1500	-	27	36	46	58	71	82	105	116	153	188	183	226		
		1	59	86	109	144	187	214	274	319	368	452	575	708		
	1200	-	26	36	46	59	71	84	108	120	160	198	195	242		
		1	52	76	98	129	166	195	250	292	341	422	543	673		
	1000	-	26	35	46	58	70	84	108	120	161	200	199	248		
		1	44	66	85	113	145	173	222	260	305	379	491	610		
	900	-	25	34	45	57	69	84	108	119	161	200	200	249		
		1	41	62	81	107	137	164	211	247	291	363	471	586		
	750	-	24	33	44	56	66	82	105	117	158	198	198	247		
		1	36	54	71	95	120	146	188	221	261	326	425	531		
Double Reduction Upright Type 9 ▼ 11.2	1800	-	22	29	35	45	55	62	79	87	113	138	131	163		
		1	53	76	95	125	164	182	232	270	306	373	461	572		
	1500	-	22	29	37	46	57	66	84	93	123	151	147	181		
		1	47	69	87	115	150	171	219	255	295	362	460	567		
	1200	-	21	29	37	47	57	68	86	96	128	158	156	194		
		1	41	61	78	104	133	156	200	234	273	338	434	538		
	1000	-	20	28	36	46	56	67	87	96	129	160	159	198		
		1	35	52	68	91	116	138	178	208	244	303	392	488		
	900	-	20	28	36	46	55	67	86	96	129	160	160	199		
		1	33	49	64	86	109	131	169	198	233	290	377	469		
	750	-	19	26	35	45	53	65	84	94	127	158	158	198		
		1	29	43	57	76	96	117	151	176	209	261	340	425		

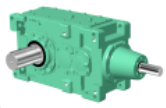

Size of Reducer										L.Speed Shaft Speed r/min	H.Speed Shaft Speed r/min	Nominal Reduction Ratio
9100	9105	9110	9115	9118	9121	9126	9128	9131	9136			
	9.000		8.947							Exact Reduction Ratio		9
	1880		2800							**200**	**1800**	
	1660		2460							**167**	**1500**	
	1420		2110							**133**	**1200**	
	1250		1850							**111**	**1000**	
	1160		1720							**100**	**900**	
	998		1500							**83**	**750**	
	9.765		10.235							Exact Reduction Ratio		10
	1880		2800							**180**	**1800**	
	1660		2460							**150**	**1500**	
	1420		2060							**120**	**1200**	
	1250		1770							**100**	**1000**	
	1160		1620							**90**	**900**	
	998		1390							**75**	**750**	
	11.382		11.302							Exact Reduction Ratio		11.2
	1570		2430							**161**	**1800**	
	1380		2140							**134**	**1500**	
	1180		1780							**107**	**1200**	
	1040		1520							**89**	**1000**	
	971		1390							**80**	**900**	
	833		1200							**67**	**750**	
	C-54		C-54							Horizontal	Dimension Tables	
	-		-							Vertical		
	-		-							Upright		

Notes

1. Consult us when the high speed shaft speed is over 1800r/min.
2. When the high speed shaft speed is not shown in the table, find it by the interpolation method.
3. When the high speed shaft speed(N) is lower than 750r/min, find the mechanical power rating(P_N) according to the following formula.

$$P_N = P_{750} \times \frac{N}{750}$$

4. Shown in the table are the ratings for the slow speed shaft.
5. Refer to C42 - C49 for the allowable radial and axial load on each shaft.

Size of Reducer										Number of Cooling Fans	H.Speed Shaft Speed r/min	Nominal Reduction Ratio
9100	9105	9110	9115	9118	9121	9126	9128	9131	9136			
										- 1	**1800**	Double Reduction Horizontal Type 9 ▼ 11.2
	560		570							- 1	**1500**	
	270 599		590							- 1	**1200**	
	280 551		320 600							- 1	**1000**	
	270 508		330 593							- 1	**900**	
	250 429		320 523							- 1	**750**	
										- 1	**1800**	Double Reduction Vertical Type 9 ▼ 11.2
										- 1	**1500**	
										- 1	**1200**	
										- 1	**1000**	
										- 1	**900**	
										- 1	**750**	
										- 1	**1800**	Double Reduction Upright Type 9 ▼ 11.2
										- 1	**1500**	
										- 1	**1200**	
										- 1	**1000**	
										- 1	**900**	
										- 1	**750**	

Ambient Temperature °C	Temperature Correction Factor	
	Without Fan	With Fan
20	1.00	1.00
30	0.85	0.87
40	0.70	0.73
50	0.55	0.60

Notes

1. Shown in the table are the ratings for models without a fan cooling unit and those with a fan.
(-:none fan, 1:with a fan, 2:with two fans)
2. The values are applicable to continuous operation at ambient temperatures of 20 C or less. When the temperature in out of the range, refer to the temperature correction factor shown above.
3. When the high speed shaft speed is not shown in the table, find it by interpolation method.

MECHANICAL POWER RATING (kW)

Nominal Reduction Ratio	H.Speed Shaft Speed r/min	L.Speed Shaft Speed r/min	Size of Reducer													
			9015	9025	9030	9035	9040	9050	9055	9060	9070	9075	9080	9085	9090	9095
12.5	Exact Reduction Ratio		12.162	12.020	12.545	12.842	12.727	12.188	12.462	12.469	12.797	12.536	12.923	12.044		12.349
	1800	144	36	58	89	111	122	225	284	322	512	700	732	1000		1180
	1500	120	30	48	74	93	102	188	237	269	428	598	612	863		1010
	1200	96	24.2	39	59	74	82	150	189	216	343	482	491	715		840
	1000	80	20.1	32	49	62	68	125	158	180	286	403	410	600		721
	900	72	18.1	29.3	44	55	61	112	142	162	258	364	369	540		660
	750	60	15.1	24.4	37	46	51	94	118	136	215	304	308	450		566
14	Exact Reduction Ratio		14.068	13.716	13.523	13.962	14.523	13.875	14.000	14.529	14.338	14.067	14.253	13.225		14.143
	1800	129	32	51	82	105	116	188	239	283	450	600	688	933		993
	1500	107	27.3	43	69	88	97	158	200	237	377	502	576	782		852
	1200	86	21.9	34	55	71	78	127	161	190	303	404	463	629		706
	1000	71	18.3	28.7	46	59	65	106	134	159	253	338	388	527		605
	900	64	16.5	25.8	41	53	58	95	121	143	228	305	350	475		554
	750	54	13.8	21.5	34	44	49	80	101	120	191	255	292	398		475
16	Exact Reduction Ratio		15.778	15.988	16.235	15.636	15.556	15.881	15.188	15.392	15.750	15.844	16.000	15.750		15.345
	1800	113	27.1	42	67	89	96	169	226	261	373	512	545	732		953
	1500	94	22.6	35	56	74	80	141	188	218	311	428	455	612		817
	1200	75	18.1	28.5	45	59	64	113	150	175	250	343	365	491		678
	1000	63	15.0	23.7	37	49	54	94	125	146	208	286	305	410		581
	900	56	13.5	21.4	33	44	48	84	113	131	188	258	275	369		532
	750	47	11.3	17.8	28.2	37	40	70	94	109	157	215	229	308		456
Dimension Tables		Horizontal	C-50	C-50	C-50	C-50	C-50	C-50	C-50	C-52	C-52	C-52	C-52	C-52		C-54
		Vertical	C-76	C-76	C-76	C-76	C-76	C-76	C-76	C-78	C-78	C-78	C-78	C-78		-
		Upright	C-92	C-92	C-92	C-92	C-92	C-92	C-92	C-94	C-94	C-94	C-94	C-94		-

THERMAL POWER RATING (kW)

Nominal Reduction Ratio	H.Speed Shaft Speed r/min	Number of Cooling Fans	Size of Reducer													
			9015	9025	9030	9035	9040	9050	9055	9060	9070	9075	9080	9085	9090	9095
Double Reduction Horizontal Type 12.5 16	1800	-	23	33	41	54	63	73	96	101	137	175	172	208		
		1	57	88	110	150	187	214	282	312	369	472	607	731		490
	1500	-	23	33	41	55	63	74	98	103	140	180	178	224		200
		1	50	77	98	137	166	192	256	283	336	433	558	702		538
	1200	-	22	31	40	55	61	73	98	103	140	181	180	230		220
		1	42	66	85	121	144	169	227	250	298	387	500	641		525
	1000	-	21	30	39	54	59	71	96	101	138	179	178	229		210
		1	36	56	73	105	123	146	198	218	260	339	438	565		444
	900	-	20	29	38	53	58	70	95	99	136	177	176	227		210
		1	33	52	68	99	115	137	186	205	245	321	414	535		425
	750	-	19	28	36	51	55	67	92	95	131	172	171	221		190
		1	28	45	59	86	100	120	164	180	216	284	367	475		350
Double Reduction Vertical Type 12.5 16	1800	-	23	33	41	54	63	73	96	101	137	175	172	208		
		1	57	88	110	150	187	214	282	312	369	472	607	731		
	1500	-	23	33	41	55	63	74	98	103	140	180	178	224		
		1	50	77	98	137	166	192	256	283	336	433	558	702		
	1200	-	22	31	40	55	61	73	98	103	140	181	180	230		
		1	42	66	85	121	144	169	227	250	298	387	500	641		
	1000	-	21	30	39	54	59	71	96	101	138	179	178	229		
		1	36	56	73	105	123	146	198	218	260	339	438	565		
	900	-	20	29	38	53	58	70	95	99	136	177	176	227		
		1	33	52	68	99	115	137	186	205	245	321	414	535		
	750	-	19	28	36	51	55	67	92	95	131	172	171	221		
		1	28	45	59	86	100	120	164	180	216	284	367	475		
Double Reduction Upright Type 12.5 16	1800	-	18	26	33	43	50	58	77	81	109	140	138	166		
		1	46	70	88	120	150	171	225	250	295	378	485	585		
	1500	-	18	26	33	44	50	59	79	82	112	144	142	179		
		1	40	62	79	109	133	154	205	227	269	346	446	562		
	1200	-	17	25	32	44	49	58	79	82	112	145	144	184		
		1	34	53	68	97	115	135	182	200	239	310	400	513		
	1000	-	17	24	31	43	47	57	77	80	110	144	142	183		
		1	29	45	58	84	99	117	158	174	208	271	350	452		
	900	-	16	23	30	42	46	56	76	79	108	142	141	182		
		1	27	42	55	79	92	110	149	164	196	257	331	428		
	750	-	15	22	29	40	44	54	73	76	105	138	137	177		
		1	23	36	47	69	80	96	131	144	173	227	293	380		

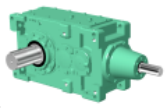

Size of Reducer										L.Speed Shaft Speed r/min	H.Speed Shaft Speed r/min	Nominal Reduction Ratio
9100	9105	9110	9115	9118	9121	9126	9128	9131	9136			
	12.349		12.929							Exact Reduction Ratio		12.5
	1570		2310							**144**	**1800**	
	1380		1980							**120**	**1500**	
	1180		1640							**96**	**1200**	
	1040		1410							**80**	**1000**	
	971		1290							**72**	**900**	
	830		1110							**60**	**750**	
	14.344		14.260							Exact Reduction Ratio		14
	1280		1980							**129**	**1800**	
	1130		1700							**107**	**1500**	
	966		1410							**86**	**1200**	
	850		1210							**71**	**1000**	
	790		1110							**64**	**900**	
	678		952							**54**	**750**	
	15.562		16.312							Exact Reduction Ratio		16
	1280		1840							**113**	**1800**	
	1130		1580							**94**	**1500**	
	966		1310							**75**	**1200**	
	850		1120							**63**	**1000**	
	790		1020							**56**	**900**	
	662		883							**47**	**750**	
	C-54		C-54							Horizontal	Dimension Tables	
	-		-							Vertical		
	-		-							Upright		

Notes

1. Consult us when the high speed shaft speed is over 1800r/min.
2. When the high speed shaft speed is not shown in the table, find it by the interpolation method.
3. When the high speed shaft speed(N) is lower than 750r/min, find the mechanical power rating(P_N) according to the following formula.

$$P_N = P_{750} \times \frac{N}{750}$$

4. Shown in the table are the ratings for the slow speed shaft.
5. Refer to C42 - C49 for the allowable radial and axial load on each shaft.

Size of Reducer										Number of Cooling Fans	H.Speed Shaft Speed r/min	Nominal Reduction Ratio
9100	9105	9110	9115	9118	9121	9126	9128	9131	9136			
										- 1	**1800**	Double Reduction Horizontal Type 12.5 ▼ 16
	560		570							- 1	**1500**	
	270 599		590							- 1	**1200**	
	280 551		320 600							- 1	**1000**	
	270 508		330 593							- 1	**900**	
	250 429		320 523							- 1	**750**	
										- 1	**1800**	Double Reduction Vertical Type 12.5 ▼ 16
										- 1	**1500**	
										- 1	**1200**	
										- 1	**1000**	
										- 1	**900**	
										- 1	**750**	
										- 1	**1800**	Double Reduction Upright Type 12.5 ▼ 16
										- 1	**1500**	
										- 1	**1200**	
										- 1	**1000**	
										- 1	**900**	
										- 1	**750**	

Ambient Temperature °C	Temperature Correction Factor	
	Without Fan	With Fan
20	1.00	1.00
30	0.85	0.87
40	0.70	0.73
50	0.55	0.60

Notes

1. Shown in the table are the ratings for models without a fan cooling unit and those with a fan.
(-:none fan, 1:with a fan, 2:with two fans)
2. The values are applicable to continuous operation at ambient temperatures of 20 C or less. When the temperature in out of the range, refer to the temperature correction factor shown above.
3. When the high speed shaft speed is not shown in the table, find it by interpolation method.

MECHANICAL POWER RATING (kW)

Nominal Reduction Ratio	H.Speed Shaft Speed r/min	L.Speed Shaft Speed r/min	Size of Reducer													
			9015	9025	9030	9035	9040	9050	9055	9060	9070	9075	9080	9085	9090	9095
18	Exact Reduction Ratio		18.250	18.243	17.500	17.000	17.750	18.080	17.062	17.936	17.647	17.779	17.647	17.294		17.625
	1800	100	25.3	37	64	86	95	145	197	230	368	478	545	719		803
	1500	83	21.1	31	53	72	79	122	165	193	308	400	455	602		689
	1200	67	17.0	25.1	43	57	63	98	132	155	247	321	365	484		571
	1000	56	14.2	20.9	36	48	53	81	111	129	207	269	305	405		490
	900	50	12.8	18.9	32	43	47	73	100	116	186	242	275	366		448
	750	42	10.7	15.7	27.1	36	39	61	83	97	156	203	229	306		384
20	Exact Reduction Ratio					20.235			19.790			19.500		19.500		19.123
	1800	90			*	67	*	*	170	*	*	373	*	545		771
	1500	75			*	56	*	*	141	*	*	311	*	455		662
	1200	60			*	45	*	*	113	*	*	250	*	365		548
	1000	50			*	37	*	*	94	*	*	208	*	305		470
	900	45			*	33	*	*	85	*	*	188	*	275		431
	750	38			*	28.2	*	*	70	*	*	157	*	229		369
22.4	Exact Reduction Ratio					22.000			22.233			21.882		21.412		
	1800	80			*	65	*	*	152	*	*	373	*	545		*
	1500	67			*	54	*	*	127	*	*	311	*	455		*
	1200	54			*	43	*	*	102	*	*	250	*	365		*
	1000	45			*	36	*	*	85	*	*	208	*	305		*
	900	40			*	32	*	*	77	*	*	188	*	275		*
	750	33			*	27.4	*	*	64	*	*	157	*	229		*
Dimension Tables		Horizontal	C-50	C-50	C-50	C-50	C-50	C-50	C-50	C-52	C-52	C-52	C-52	C-52		C-54
		Vertical	C-76	C-76	C-76	C-76	C-76	C-76	C-76	C-78	C-78	C-78	C-78	C-78		-
		Upright	C-92	C-92	C-92	C-92	C-92	C-92	C-92	C-94	C-94	C-94	C-94	C-94		-

THERMAL POWER RATING (kW)

Nominal Reduction Ratio	H.Speed Shaft Speed r/min	Number of Cooling Fans	Size of Reducer													
			9015	9025	9030	9035	9040	9050	9055	9060	9070	9075	9080	9085	9090	9095
Double Reduction Horizontal Type 18 22.4	1800	-	22	32	40	49	56	73	89	103	139	165	175	209		
		1	55	85	108	136	165	213	259	317	375	445	617	736		490
	1500	-	22	31	40	48	55	74	89	104	142	167	181	213		200
		1	48	74	96	120	146	192	231	287	341	401	567	668		538
	1200	-	21	30	39	47	54	73	87	104	142	165	183	213		220
		1	41	64	83	103	127	169	201	254	303	353	507	593		525
	1000	-	20	29	38	45	53	71	84	102	140	162	181	210		210
		1	35	54	71	88	110	146	173	220	264	306	445	517		444
	900	-	19	28	37	44	52	70	83	100	138	159	178	207		210
		1	32	50	67	82	103	137	162	207	249	288	421	487		425
	750	-	18	27	35	42	50	67	79	97	133	154	173	200		190
		1	27	43	58	71	90	120	141	182	219	253	372	430		350
Double Reduction Vertical Type 18 22.4	1800	-	22	32	40	49	53	73	89	103	139	165	175	209		
		1	55	85	108	136	157	213	259	317	375	445	617	736		
	1500	-	22	31	40	48	53	74	89	104	142	167	181	213		
		1	48	74	96	120	141	192	231	287	341	401	567	668		
	1200	-	21	30	39	47	53	73	87	104	142	165	183	213		
		1	41	64	83	103	124	169	201	254	303	353	507	593		
	1000	-	20	29	38	45	52	71	84	102	140	162	181	210		
		1	35	54	71	88	107	146	173	220	264	306	445	517		
	900	-	19	28	37	44	51	70	83	100	138	159	178	207		
		1	32	50	67	82	101	137	162	207	249	288	421	487		
	750	-	18	27	35	42	49	67	79	97	133	154	173	200		
		1	27	43	58	71	88	120	141	182	219	253	372	430		
Double Reduction Upright Type 18 22.4	1800	-	18	25	32	39	44	58	71	82	111	132	140	167		
		1	44	68	87	109	132	171	207	254	300	356	494	589		
	1500	-	17	25	32	39	44	59	71	84	114	133	145	171		
		1	38	60	77	96	117	154	185	230	273	321	453	535		
	1200	-	17	24	32	37	43	58	70	83	114	132	146	170		
		1	33	51	67	82	102	135	161	203	242	282	406	474		
	1000	-	16	23	30	36	42	57	68	82	112	130	144	168		
		1	28	43	57	70	88	116	138	176	211	245	356	413		
	900	-	15	23	30	35	41	56	66	80	110	127	143	165		
		1	26	40	53	66	82	109	130	166	199	230	336	390		
	750	-	15	21	28	33	40	54	63	77	107	123	139	160		
		1	22	35	46	57	72	96	113	146	176	202	298	344		

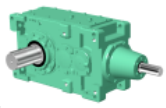

Size of Reducer										L.Speed Shaft Speed r/min	H.Speed Shaft Speed r/min	Nominal Reduction Ratio
9100	9105	9110	9115	9118	9121	9126	9128	9131	9136			
	18.000		17.895							Exact Reduction Ratio		18
	1040		1590							100	1800	
	918		1370							83	1500	
	785		1130							67	1200	
	691		975							56	1000	
	642		892							50	900	
	551		765							42	750	
	19.529		20.471							Exact Reduction Ratio		20
	1040		1480							90	1800	
	918		1270							75	1500	
	785		1050							60	1200	
	691		905							50	1000	
	634		829							45	900	
	530		711							38	750	
										Exact Reduction Ratio		22.4
	*		*							80	1800	
	*		*							67	1500	
	*		*							54	1200	
	*		*							45	1000	
	*		*							40	900	
	*		*							33	750	
	C-54		C-54							Horizontal	Dimension Tables	
	-		-							Vertical		
	-		-							Upright		

Notes

1. Consult us when the high speed shaft speed is over 1800r/min.
2. When the high speed shaft speed is not shown in the table, find it by the interpolation method.
3. When the high speed shaft speed(N) is lower than 750r/min, find the mechanical power rating(P_N) according to the following formula.

$$P_N = P_{750} \times \frac{N}{750}$$

4. Shown in the table are the ratings for the slow speed shaft.
5. Refer to C42 - C49 for the allowable radial and axial load on each shaft.

Size of Reducer										Number of Cooling Fans	H.Speed Shaft Speed r/min	Nominal Reduction Ratio
9100	9105	9110	9115	9118	9121	9126	9128	9131	9136			
										-	1800	Double Reduction Horizontal Type 18 ▼ 22.4
										1		
	560		570							-	1500	
										1		
	270									-	1200	
	599		590							1		
	280		320							-	1000	
	551		600							1		
	270		330							-	900	
	508		593							1		
	250		320							-	750	
	429		523							1		
										-	1800	Double Reduction Vertical Type 18 ▼ 22.4
										1		
										-	1500	
										1		
										-	1200	
										1		
										-	1000	
										1		
										-	900	
										1		
										-	750	
										1		
										-	1800	Double Reduction Upright Type 18 ▼ 22.4
										1		
										-	1500	
										1		
										-	1200	
										1		
										-	1000	
										1		
										-	900	
										1		
										-	750	
										1		

Ambient Temperature °C	Temperature Correction Factor	
	Without Fan	With Fan
20	1.00	1.00
30	0.85	0.87
40	0.70	0.73
50	0.55	0.60

Notes

1. Shown in the table are the ratings for models without a fan cooling unit and those with a fan.
(-:none fan, 1:with a fan, 2:with two fans)
2. The values are applicable to continuous operation at ambient temperatures of 20 C or less. When the temperature in out of the range, refer to the temperature correction factor shown above.
3. When the high speed shaft speed is not shown in the table, find it by interpolation method.

MECHANICAL POWER RATING (kW)

Nominal Reduction Ratio	H.Speed Shaft Speed r/min	L.Speed Shaft Speed r/min	Size of Reducer													
			9015	9025	9030	9035	9040	9050	9055	9060	9070	9075	9080	9085	9090	9095
20	Exact Reduction Ratio				20.091		19.620	19.790		19.181	19.950		20.206		20.548	
	1800	90			61	*	81	124	*	194	295	*	516	*	735	*
	1500	75			51	*	67	103	*	162	246	*	431	*	616	*
	1200	60			41	*	54	83	*	130	198	*	346	*	495	*
	1000	50			34	*	45	69	*	108	165	*	289	*	413	*
	900	45			31	*	40	62	*	97	149	*	261	*	373	*
	750	38			26.1	*	34	52	*	81	124	*	218	*	311	*
22.4	Exact Reduction Ratio				21.656		22.388	22.530		22.351	22.353		22.286		22.353	22.800
	1800	80			55	*	81	124	*	194	295	*	476	*	696	735
	1500	67			46	*	67	103	*	162	246	*	398	*	582	616
	1200	54			37	*	54	83	*	130	198	*	320	*	468	495
	1000	45			31	*	45	69	*	108	165	*	268	*	391	413
	900	40			28.1	*	40	62	*	97	149	*	241	*	353	373
	750	33			23.5	*	34	52	*	81	124	*	202	*	295	311
25	Exact Reduction Ratio				25.137	25.041	24.444	25.935	24.662	25.137	24.938		24.630	24.626	25.685	24.737
	1800	72			49	64	80	117	124	193	295		453	516	625	714
	1500	60			41	54	67	98	103	162	246		379	431	528	613
	1200	48			33	43	53	78	83	130	198		304	346	424	495
	1000	40			27.8	36	45	65	69	108	165		254	289	355	413
	900	36			25.0	32	40	59	62	97	149		229	261	320	373
	750	30			20.9	27.3	33	49	52	81	124		192	218	267	311
Dimension Tables		Horizontal			C-56	C-56	C-56	C-56	C-56	C-58	C-58		C-58	C-58	C-60	C-60
		Vertical			C-80	C-80	C-80	C-80	C-80	C-82	C-82		C-82	C-82	C-84	C-84
		Upright			C-96	C-96	C-96	C-96	C-96	C-98	C-98		C-98	C-98	-	-

THERMAL POWER RATING (kW)

Nominal Reduction Ratio	H.Speed Shaft Speed r/min	Number of Cooling Fans	Size of Reducer													
			9015	9025	9030	9035	9040	9050	9055	9060	9070	9075	9080	9085	9090	9095
Triple Reduction Horizontal Type 20 ▼ 25	1800	-			34	43	53	61	77	84	113		138	172	213	239
		1			65	86	93	141	178	177	214		368	459	510	572
	1500	-			34	43	53	61	77	85	115		144	178	220	246
		1			58	77	83	126	159	160	195		340	421	468	524
	1200	-			33	43	52	60	76	85	115		146	180	222	249
		1			51	67	72	111	139	141	173		307	377	419	469
	1000	-			33	42	50	59	74	83	114		145	178	220	247
		1			44	58	62	96	120	122	151		271	332	369	413
	900	-			32	41	49	58	73	82	112		144	176	218	244
		1			42	54	58	90	113	115	143		257	314	350	391
	750	-			31	39	47	56	70	79	109		141	172	213	239
		1			36	47	50	79	99	102	126		229	279	311	348
Triple Reduction Vertical Type 20 ▼ 25	1800	-			31	41	51	57	73	79	105		126	159	181	203
		1			61	81	89	133	169	166	200		336	422	433	485
	1500	-			32	42	51	59	74	81	109		135	168	195	219
		1			55	74	80	121	153	152	185		319	397	416	466
	1200	-			32	41	51	59	74	82	111		140	172	205	229
		1			49	65	70	107	135	136	167		293	362	386	433
	1000	-			32	41	49	58	72	81	111		141	173	207	232
		1			43	56	60	93	117	119	147		262	321	346	388
	900	-			31	40	48	57	71	80	110		140	172	207	232
		1			40	53	57	88	110	113	139		250	306	331	371
	750	-			30	38	46	55	69	78	107		138	169	205	229
		1			36	47	50	78	97	100	124		224	273	298	334
Triple Reduction Upright Type 20 ▼ 25	1800	-			34	43	55	61	77	84	113		138	172		
		1			65	86	96	141	178	177	214		368	459		
	1500	-			34	43	55	61	77	85	115		144	178		
		1			58	77	85	126	159	160	195		340	421		
	1200	-			33	43	54	60	76	85	115		146	180		
		1			51	67	74	111	139	141	173		307	377		
	1000	-			33	42	52	59	74	83	114		145	178		
		1			44	58	64	96	120	122	151		271	332		
	900	-			32	41	51	58	73	82	112		144	176		
		1			42	54	60	90	113	115	143		257	314		
	750	-			31	39	49	56	70	79	109		141	172		
		1			36	47	52	79	99	102	126		229	279		

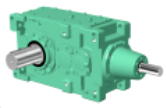

Size of Reducer										L.Speed Shaft Speed r/min	H.Speed Shaft Speed r/min	Nominal Reduction Ratio
9100	**9105**	**9110**	**9115**	**9118**	**9121**	**9126**	**9128**	**9131**	**9136**			
20.504		19.608								Exact Reduction Ratio		**20**
992	*	1520	*							**90**	**1800**	
829	*	1270	*							**75**	**1500**	
666	*	1020	*							**60**	**1200**	
556	*	856	*							**50**	**1000**	
501	*	772	*							**45**	**900**	
419	*	645	*							**38**	**750**	
22.004	22.444	22.499	22.222							Exact Reduction Ratio		**22.4**
992	992	1360	1520							**80**	**1800**	
829	829	1160	1270							**67**	**1500**	
666	666	936	1020							**54**	**1200**	
556	556	783	856							**45**	**1000**	
501	501	706	772							**40**	**900**	
419	419	591	645							**33**	**750**	
25.271	24.351	24.166	25.421	24.837						Exact Reduction Ratio		**25**
912	992	1270	1360	1520						**72**	**1800**	
763	829	1090	1170	1270						**60**	**1500**	
613	666	910	970	1020						**48**	**1200**	
513	556	771	827	856						**40**	**1000**	
462	501	696	746	772						**36**	**900**	
386	419	582	624	645						**30**	**750**	
C-60	C-60	C-60	C-60	C-62						Horizontal	Dimension Tables	
C-84	C-84	C-84	C-84	-						Vertical		
-	-	-	-	-						Upright		

Notes

1. Consult us when the high speed shaft speed is over 1800r/min.
2. When the high speed shaft speed is not shown in the table, find it by the interpolation method.
3. When the high speed shaft speed(N) is lower than 750r/min, find the mechanical power rating(P_N) according to the following formula.

$$P_N = P_{750} \times \frac{N}{750}$$

4. Shown in the table are the ratings for the slow speed shaft.
5. Refer to C42 - C49 for the allowable radial and axial load on each shaft.

Size of Reducer										Number of Cooling Fans	H.Speed Shaft Speed r/min	Nominal Reduction Ratio
9100	**9105**	**9110**	**9115**	**9118**	**9121**	**9126**	**9128**	**9131**	**9136**			
273	306	348	385	426						-	**1800**	Triple Reduction Horizontal Type **20 ▼ 25**
767	860	933	1031	703						1		
282	317	366	402	443						-	**1500**	
705	792	874	958	730						1		
286	321	375	410	450						-	**1200**	
634	711	794	869	743						1		
284	319	375	410	449						-	**1000**	
558	627	703	769	741						1		
281	316	373	408	446						-	**900**	
530	595	669	732	736						1		
275	309	366	400	437						-	**750**	
472	530	599	654	722						1		
230	258	280	316							-	**1800**	Triple Reduction Vertical Type **20 ▼ 25**
646	724	750	847							1		
249	280	315	350							-	**1500**	
624	700	751	834							1		
262	294	340	373							-	**1200**	
582	653	719	791							1		
266	299	349	382							-	**1000**	
524	588	655	717							1		
266	299	351	384							-	**900**	
502	563	630	689							1		
264	296	350	382							-	**750**	
453	508	571	625							1		
										-	**1800**	Triple Reduction Upright Type **20 ▼ 25**
										1		
										-	**1500**	
										1		
										-	**1200**	
										1		
										-	**1000**	
										1		
										-	**900**	
										1		
										-	**750**	
										1		

Ambient Temperature °C	Temperature Correction Factor	
	Without Fan	With Fan
20	1.00	1.00
30	0.85	0.87
40	0.70	0.73
50	0.55	0.60

Notes

1. Shown in the table are the ratings for models without a fan cooling unit and those with a fan.
(-:none fan, 1:with a fan, 2:with two fans)
2. The values are applicable to continuous operation at ambient temperatures of 20 C or less. When the temperature in out of the range, refer to the temperature correction factor shown above.
3. When the high speed shaft speed is not shown in the table, find it by interpolation method.

MECHANICAL POWER RATING (kW)

Nominal Reduction Ratio	H.Speed Shaft Speed r/min	L.Speed Shaft Speed r/min	Size of Reducer													
			9015	9025	9030	9035	9040	9050	9055	9060	9070	9075	9080	9085	9090	9095
28	Exact Reduction Ratio				27.096	27.225	27.893	29.526	27.706	29.291	27.941	27.718	27.165	27.041	27.941	28.500
	1800	64			44	58	65	96	124	152	251	295	392	498	559	625
	1500	54			37	49	55	80	103	127	210	246	328	417	468	536
	1200	43			29.9	39	44	64	83	102	168	198	263	335	376	444
	1000	36			25.0	33	36	54	69	85	141	165	220	280	314	379
	900	32			22.5	29.7	33	48	62	77	127	149	198	252	283	341
	750	27			18.8	24.8	28	40	52	64	106	124	166	211	237	285
31.5	Exact Reduction Ratio				32.455	31.331	31.694	31.969	32.319	30.157	31.129	30.875	32.280	30.017	32.063	30.922
	1800	57			32	51	57	92	124	140	225	295	331	473	508	589
	1500	48			26.9	43	48	79	103	117	190	246	280	399	425	498
	1200	38			21.5	34	38	64	83	94	152	198	224	321	341	400
	1000	32			18.0	29.1	32	53	69	78	127	165	187	268	285	335
	900	29			16.2	26.2	29	48	62	70	114	149	169	242	257	302
	750	24			13.5	21.9	24.1	40	52	59	95	124	141	202	215	252
35.5	Exact Reduction Ratio				34.983	34.063	36.165	36.395	36.309	35.140	34.879	34.647	35.603	32.960	34.879	35.576
	1800	51			32	47	51	78	100	127	202	266	301	410	450	522
	1500	42			26.9	39	42	65	84	106	169	223	251	343	376	448
	1200	34			21.5	31	34	52	67	85	135	179	202	276	302	364
	1000	28			18.0	26.4	29	44	56	71	113	149	169	230	253	304
	900	25			16.2	23.8	25.7	39	50	64	102	134	152	208	228	274
	750	21			13.5	19.9	21.5	33	42	53	85	112	127	173	190	229
Dimension Tables		Horizontal			C-56	C-56	C-56	C-56	C-56	C-58	C-58	C-58	C-58	C-58	C-60	C-60
		Vertical			C-80	C-80	C-80	C-80	C-80	C-82	C-82	C-82	C-82	C-82	C-84	C-84
		Upright			C-96	C-96	C-96	C-96	C-96	C-98	C-98	C-98	C-98	C-98	-	-

THERMAL POWER RATING (kW)

Nominal Reduction Ratio	H.Speed Shaft Speed r/min	Number of Cooling Fans	Size of Reducer													
			9015	9025	9030	9035	9040	9050	9055	9060	9070	9075	9080	9085	9090	9095
Triple Reduction Horizontal Type 28 ▼ 35.5	1800	-			31	40	49	58	74	81	109	136	137	168	210	229
		1			59	79	85	135	171	172	208	259	364	447	502	547
	1500	-			30	40	48	58	73	81	110	138	139	172	212	230
		1			52	71	75	120	152	153	186	233	328	408	452	490
	1200	-			29	39	46	57	72	80	108	136	138	173	211	228
		1			44	61	64	104	132	133	162	205	289	364	398	430
	1000	-			28	38	44	55	70	78	106	134	135	172	207	223
		1			38	53	54	89	114	115	140	178	251	319	346	373
	900	-			27	37	43	53	69	76	104	132	133	170	204	220
		1			35	50	51	83	106	108	132	168	236	302	327	352
	750	-			26	36	41	51	66	73	100	128	128	165	198	213
		1			30	43	44	72	93	94	116	148	208	268	288	310
Triple Reduction Vertical Type 28 ▼ 35.5	1800	-			30	38	47	56	70	77	103	128	128	156	180	200
		1			57	75	82	129	163	162	196	244	341	415	430	477
	1500	-			29	38	47	56	71	78	105	132	132	163	194	212
		1			50	68	72	115	146	147	178	222	313	386	412	450
	1200	-			28	38	45	55	70	78	105	132	133	167	198	215
		1			43	60	62	101	128	129	157	198	279	351	373	405
	1000	-			27	37	44	54	69	76	103	131	131	167	197	213
		1			37	52	54	87	111	112	137	174	244	310	330	357
	900	-			27	37	43	52	67	75	102	129	130	165	196	211
		1			34	49	50	81	105	105	129	164	231	295	313	338
	750	-			25	35	41	50	65	72	98	126	126	162	191	206
		1			30	43	43	71	92	92	114	146	204	263	279	300
Triple Reduction Upright Type 28 ▼ 35.5	1800	-			31	40	51	58	74	81	109	136	137	168		
		1			59	79	90	135	171	172	208	259	364	447		
	1500	-			30	40	50	58	73	81	110	138	139	172		
		1			52	71	78	120	152	153	186	233	328	408		
	1200	-			29	39	49	57	72	80	108	136	138	173		
		1			44	61	67	104	132	133	162	205	289	364		
	1000	-			28	38	47	55	70	78	106	134	135	172		
		1			38	53	57	89	114	115	140	178	251	319		
	900	-			27	37	45	53	69	76	104	132	133	170		
		1			35	50	53	83	106	108	132	168	236	302		
	750	-			26	36	43	51	66	73	100	128	128	165		
		1			30	43	46	72	93	94	116	148	208	268		

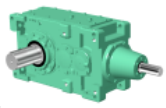

Size of Reducer										L.Speed Shaft Speed r/min	H.Speed Shaft Speed r/min	Nominal Reduction Ratio
9100	**9105**	**9110**	**9115**	**9118**	**9121**	**9126**	**9128**	**9131**	**9136**			
27.119	27.662	27.730	27.389		28.500	28.500		27.737	27.737	Exact Reduction Ratio		
812	970	1130	1280		1930	2060		3110	3260	**64**	**1800**	
679	825	949	1090		1610	1770		2600	2800	**54**	**1500**	
546	663	763	910		1300	1460		2090	2320	**43**	**1200**	**28**
456	554	638	781		1080	1250		1750	1990	**36**	**1000**	
411	500	575	715		982	1140		1580	1820	**32**	**900**	
344	418	481	612		821	955		1320	1560	**27**	**750**	
32.716	30.012	31.413	31.331	31.500	30.922	30.922		31.729	31.729	Exact Reduction Ratio		
708	877	988	1140	1380	1780	1920		2730	2910	**57**	**1800**	
592	734	823	978	1150	1490	1640		2280	2500	**48**	**1500**	
476	590	658	806	923	1200	1360		1840	2070	**38**	**1200**	**31.5**
398	493	548	674	769	1000	1160		1530	1770	**32**	**1000**	
359	445	494	608	692	906	1050		1380	1620	**29**	**900**	
300	372	411	508	576	758	882		1160	1360	**24**	**750**	
35.108	35.811	36.045	35.601	36.176	36.000	36.000	36.500	35.036	35.036	Exact Reduction Ratio		
630	766	878	988	1330	1530	1690	2110	2480	2680	**51**	**1800**	
527	640	734	823	1110	1280	1450	1760	2070	2300	**42**	**1500**	
424	514	590	658	895	1030	1200	1420	1670	1910	**34**	**1200**	**35.5**
354	430	493	548	748	866	1000	1180	1390	1630	**28**	**1000**	
319	388	445	494	675	780	908	1070	1260	1480	**25**	**900**	
267	324	372	411	564	652	759	895	1050	1240	**21**	**750**	
C-60	C-60	C-60	C-60	C-62	C-62	C-62	C-64	C-64	C-64	Horizontal	Dimension Tables	
C-84	C-84	C-84	C-84	-	-	-	-	-	-	Vertical		
-	-	-	-	-	-	-	-	-	-	Upright		

Notes

1. Consult us when the high speed shaft speed is over 1800r/min.
2. When the high speed shaft speed is not shown in the table, find it by the interpolation method.
3. When the high speed shaft speed(N) is lower than 750r/min, find the mechanical power rating(P_N) according to the following formula.

$$P_N = P_{750} \times \frac{N}{750}$$

4. Shown in the table are the ratings for the slow speed shaft.
5. Refer to C42 - C49 for the allowable radial and axial load on each shaft.

Size of Reducer										Number of Cooling Fans	H.Speed Shaft Speed r/min	Nominal Reduction Ratio
9100	**9105**	**9110**	**9115**	**9118**	**9121**	**9126**	**9128**	**9131**	**9136**			
272	298	340	376	417	500	500	455	537	537	-	**1800**	Triple Reduction Horizontal Type **28 ▼ 35.5**
764	839	912	1007	688	824	824	751	886	886	1		
275	303	348	389	428	529	529	488	586	586	-	**1500**	
688	758	830	929	706	872	872	805	966	966	1		
274	300	348	390	431	546	546	509	619	619	-	**1200**	
607	666	736	825	712	901	901	841	1021	1021	1		
269	294	343	383	428	543	543	516	630	630	-	**1000**	
529	579	643	719	706	895	895	851	1040	1040	1		
265	290	338	378	424	538	538	516	629	629	-	**900**	
499	546	607	679	700	888	888	851	1038	1038	1		
257	281	329	367	415	526	526	511	622	622	-	**750**	
441	481	538	600	684	868	868	843	1026	1026	1		
232	255	280	315							-	**1800**	Triple Reduction Vertical Type **28 ▼ 35.5**
651	717	750	844							1		
251	274	310	343							-	**1500**	
627	685	738	819							1		
256	282	324	363							-	**1200**	
569	627	686	768							1		
256	281	325	365							-	**1000**	
503	552	609	684							1		
254	278	323	362							-	**900**	
478	524	580	651							1		
248	272	317	355							-	**750**	
426	466	519	581							1		
										-	**1800**	Triple Reduction Upright Type **28 ▼ 35.5**
										1		
										-	**1500**	
										1		
										-	**1200**	
										1		
										-	**1000**	
										1		
										-	**900**	
										1		
										-	**750**	
										1		

Ambient Temperature °C	Temperature Correction Factor	
	Without Fan	With Fan
20	1.00	1.00
30	0.85	0.87
40	0.70	0.73
50	0.55	0.60

Notes

1. Shown in the table are the ratings for models without a fan cooling unit and those with a fan.
(-:none fan, 1:with a fan, 2:with two fans)
2. The values are applicable to continuous operation at ambient temperatures of 20 C or less. When the temperature in out of the range, refer to the temperature correction factor shown above.
3. When the high speed shaft speed is not shown in the table, find it by interpolation method.

MECHANICAL POWER RATING (kW)

Nominal Reduction Ratio	H.Speed Shaft Speed r/min	L.Speed Shaft Speed r/min	Size of Reducer													
			9015	9025	9030	9035	9040	9050	9055	9060	9070	9075	9080	9085	9090	9095
40	Exact Reduction Ratio				40.607	40.451	39.487	41.895	39.838	39.520	38.912	38.541	39.346	39.341	40.078	38.599
	1800	45			30	32	50	73	92	124	194	225	286	331	408	479
	1500	38			25.8	26.9	41	61	79	103	162	190	239	280	341	401
	1200	30			20.7	21.5	33	49	65	83	130	152	192	224	274	322
	1000	25			17.3	18.0	28.0	40	56	69	109	127	160	187	229	269
	900	23			15.6	16.2	25.3	36	51	62	98	114	144	169	206	242
	750	19			13.0	13.5	21.1	30	42	52	82	95	121	141	172	202
45	Exact Reduction Ratio				43.770	43.979	45.058	47.695	44.756	46.051	43.599	43.250	43.397	43.198	43.599	44.471
	1800	40			27.8	32	41	60	82	97	162	214	248	315	362	430
	1500	33			23.2	26.9	34	50	68	81	135	179	207	263	302	364
	1200	27			18.6	21.5	28	40	55	65	108	144	166	211	243	292
	1000	22			15.6	18.0	23.0	33	46	54	91	120	139	176	203	244
	900	20			14.0	16.2	20.7	30	41	49	82	108	125	159	183	220
	750	17			11.7	13.5	17.3	25.3	34	41	68	90	104	133	152	184
50	Exact Reduction Ratio				51.141	50.611		51.869	52.207	50.273	49.500	48.176	48.889	47.953	50.984	48.249
	1800	36			19.3	32		59	78	97	153	199	231	295	322	385
	1500	30			16.1	26.9		49	65	81	128	170	193	252	269	322
	1200	24			12.9	21.5		39	52	65	102	137	155	202	216	258
	1000	20			10.8	18.0		33	43	54	86	115	129	169	180	216
	900	18			9.7	16.2		29.9	39	49	77	103	116	152	162	194
	750	15			8.1	13.5		24.9	32	41	64	86	97	127	136	162
Dimension Tables		Horizontal			C-56	C-56	C-56	C-56	C-56	C-58	C-58	C-58	C-58	C-58	C-60	C-60
		Vertical			C-80	C-80	C-80	C-80	C-80	C-82	C-82	C-82	C-82	C-82	C-84	C-84
		Upright			C-96	C-96	C-96	C-96	C-96	C-98	C-98	C-98	C-98	C-98	-	-

THERMAL POWER RATING (kW)

Nominal Reduction Ratio	H.Speed Shaft Speed r/min	Number of Cooling Fans	Size of Reducer													
			9015	9025	9030	9035	9040	9050	9055	9060	9070	9075	9080	9085	9090	9095
Triple Reduction Horizontal Type 40 ▼ 50	1800	-			26	37	44	53	67	74	102	126	129	159	196	219
		1			51	73	76	123	155	155	194	240	342	422	468	524
	1500	-			26	36	42	52	66	73	101	125	128	159	195	220
		1			44	63	66	108	136	136	171	212	304	376	415	468
	1200	-			24	34	40	50	64	70	98	122	126	156	191	217
		1			37	54	55	92	117	117	147	184	264	328	360	410
	1000	-			23	33	38	48	61	68	95	119	122	152	186	213
		1			31	46	46	78	100	100	126	158	227	283	310	356
	900	-			22	32	37	47	60	66	93	117	120	149	182	209
		1			29	42	43	73	93	93	118	148	213	266	291	335
	750	-			21	30	34	45	57	63	89	112	115	144	175	202
		1			24	36	37	63	81	81	103	130	186	233	255	295
Triple Reduction Vertical Type 40 ▼ 50	1800	-			26	36	43	51	64	71	98	121	123	151	179	197
		1			49	71	74	119	149	149	186	229	326	401	427	471
	1500	-			25	35	41	51	64	70	98	121	124	153	182	203
		1			43	62	64	105	132	132	165	205	293	362	387	432
	1200	-			24	34	39	49	62	69	96	119	122	152	182	205
		1			36	53	54	90	114	115	144	179	257	319	343	387
	1000	-			23	32	37	48	60	67	93	117	120	149	179	203
		1			30	45	46	77	98	98	124	155	223	277	299	340
	900	-			22	31	36	46	59	65	91	115	117	147	176	201
		1			28	42	42	72	92	92	116	146	209	261	282	322
	750	-			20	30	34	44	56	62	87	110	113	142	170	196
		1			24	36	36	62	80	80	101	128	184	230	248	286
Triple Reduction Upright Type 40 ▼ 50	1800	-			26	37	47	53	67	74	102	126	129	159		
		1			51	73	83	123	155	155	194	240	342	422		
	1500	-			26	36	47	52	66	73	101	125	128	159		
		1			44	63	72	108	136	136	171	212	304	376		
	1200	-			24	34	45	50	64	70	98	122	126	156		
		1			37	54	62	92	117	117	147	184	264	328		
	1000	-			23	33	43	48	61	68	95	119	122	152		
		1			31	46	53	78	100	100	126	158	227	283		
	900	-			22	32	42	47	60	66	93	117	120	149		
		1			29	42	49	73	93	93	118	148	213	266		
	750	-			21	30	40	45	57	63	89	112	115	144		
		1			24	36	42	63	81	81	103	130	186	233		

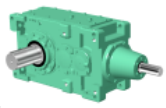

Size of Reducer										L.Speed Shaft Speed r/min	H.Speed Shaft Speed r/min	Nominal Reduction Ratio
9100	**9105**	**9110**	**9115**	**9118**	**9121**	**9126**	**9128**	**9131**	**9136**			
40.322	38.853	38.716	40.726	38.824	39.059	39.059	39.601	40.079	40.079	Exact Reduction Ratio		**40**
577	682	861	917	1240	1420	1570	1940	2170	2390	**45**	**1800**	
483	570	723	775	1030	1180	1350	1630	1820	2050	**38**	**1500**	
388	458	581	623	835	955	1110	1310	1460	1700	**30**	**1200**	
324	383	486	521	698	799	930	1090	1220	1440	**25**	**1000**	
292	345	438	469	630	720	839	988	1100	1300	**23**	**900**	
244	288	366	392	526	602	701	826	923	1080	**19**	**750**	
43.271	44.136	44.425	43.878	45.882	45.529	45.529	46.162	44.206	44.206	Exact Reduction Ratio		**45**
514	624	715	861	1050	1220	1390	1670	1970	2200	**40**	**1800**	
429	522	598	739	882	1020	1190	1400	1650	1890	**33**	**1500**	
345	419	480	610	709	822	957	1120	1330	1560	**27**	**1200**	
288	350	402	508	593	687	800	943	1110	1310	**22**	**1000**	
260	315	362	457	534	620	721	850	1000	1180	**20**	**900**	
217	264	302	381	446	518	603	710	838	988	**17**	**750**	
50.875	47.886	48.680	50.194	49.040	49.398	49.398	50.084	50.569	50.569	Exact Reduction Ratio		**50**
459	555	691	755	988	1120	1290	1540	1730	1970	**36**	**1800**	
384	464	578	632	827	945	1090	1290	1450	1690	**30**	**1500**	
308	373	464	507	664	759	883	1040	1160	1370	**24**	**1200**	
257	312	388	424	555	634	738	870	974	1140	**20**	**1000**	
232	281	349	382	500	572	666	785	878	1030	**18**	**900**	
194	234	292	319	416	478	556	656	734	866	**15**	**750**	
C-60	C-60	C-60	C-60	C-62	C-62	C-62	C-64	C-64	C-64	Horizontal	Dimension Tables	
C-84	C-84	C-84	C-84	-	-	-	-	-	-	Vertical		
-	-	-	-	-	-	-	-	-	-	Upright		

Notes

1. Consult us when the high speed shaft speed is over 1800r/min.
2. When the high speed shaft speed is not shown in the table, find it by the interpolation method.
3. When the high speed shaft speed(N) is lower than 750r/min, find the mechanical power rating(P_N) according to the following formula.

$$P_N = P_{750} \times \frac{N}{750}$$

4. Shown in the table are the ratings for the slow speed shaft.
5. Refer to C42 - C49 for the allowable radial and axial load on each shaft.

Size of Reducer										Number of Cooling Fans	H.Speed Shaft Speed r/min	Nominal Reduction Ratio
9100	**9105**	**9110**	**9115**	**9118**	**9121**	**9126**	**9128**	**9131**	**9136**			
258	285	330	362	399	524	524	450	552	552	-	**1800**	Triple Reduction Horizontal Type **40 ▼ 50**
724	801	885	969	658	864	864	743	911	911	1		
257	287	335	365	401	529	529	481	586	586	-	**1500**	
642	717	798	870	662	872	872	793	966	966	1		
252	283	330	362	397	525	525	490	593	593	-	**1200**	
558	629	700	767	655	866	866	809	978	978	1		
245	277	323	356	389	516	516	490	590	590	-	**1000**	
482	545	606	667	642	852	852	808	973	973	1		
240	273	317	351	383	509	509	487	585	585	-	**900**	
453	514	570	630	633	840	840	803	965	965	1		
232	264	306	340	372	495	495	478	573	573	-	**750**	
397	453	501	556	613	817	817	788	945	945	1		
233	256	291	322							-	**1800**	Triple Reduction Vertical Type **40 ▼ 50**
656	720	779	862							1		
239	265	305	335							-	**1500**	
599	661	727	799							1		
239	268	312	341							-	**1200**	
531	594	661	721							1		
236	265	310	340							-	**1000**	
463	522	581	637							1		
232	263	306	337							-	**900**	
438	495	550	605							1		
225	256	298	330							-	**750**	
386	439	487	539							1		
										-	**1800**	Triple Reduction Upright Type **40 ▼ 50**
										1		
										-	**1500**	
										1		
										-	**1200**	
										1		
										-	**1000**	
										1		
										-	**900**	
										1		
										-	**750**	
										1		

Ambient Temperature °C	Temperature Correction Factor	
	Without Fan	With Fan
20	1.00	1.00
30	0.85	0.87
40	0.70	0.73
50	0.55	0.60

Notes

1. Shown in the table are the ratings for models without a fan cooling unit and those with a fan.
(-:none fan, 1:with a fan, 2:with two fans)
2. The values are applicable to continuous operation at ambient temperatures of 20 C or less. When the temperature in out of the range, refer to the temperature correction factor shown above.
3. When the high speed shaft speed is not shown in the table, find it by interpolation method.

MECHANICAL POWER RATING (kW)

Nominal Reduction Ratio	H.Speed Shaft Speed r/min	L.Speed Shaft Speed r/min	Size of Reducer													
			9015	9025	9030	9035	9040	9050	9055	9060	9070	9075	9080	9085	9090	9095
56	Exact Reduction Ratio				55.125	55.025	56.987	59.051	58.652	58.582	55.462	54.062	53.922	52.655	55.462	56.571
	1800	32			19.3	29.4	31	48	62	77	128	172	200	259	285	344
	1500	27			16.1	24.6	26.1	40	52	64	107	144	167	216	238	287
	1200	21			12.9	19.7	20.9	32	42	51	85	115	134	174	191	231
	1000	18			10.8	16.5	17.5	27.3	35	43	71	96	112	145	160	193
	900	16			9.7	14.8	15.7	24.6	31	38	64	87	101	131	144	173
	750	13			8.1	12.4	13.1	20.5	26.5	32	54	72	84	109	120	145
63	Exact Reduction Ratio				63.986		62.222	64.640	64.637	63.984	63.000	61.286	62.222	59.583	64.889	61.378
	1800	29			19.3		31	47	63	75	111	156	172	238	254	304
	1500	24			16.1		26.1	39	52	63	92	132	143	202	212	254
	1200	19			12.9		20.9	31	42	50	74	106	115	162	170	204
	1000	16			10.8		17.5	26.6	35	42	62	88	96	135	142	170
	900	14			9.7		15.7	24.0	31	38	55	80	86	122	128	153
	750	12			8.1		13.1	20.0	26.6	31	46	66	72	102	107	128
71	Exact Reduction Ratio				68.971	69.300	71.000	73.590	72.617	74.559	70.588	68.773	68.627	65.425	70.588	72.000
	1800	25			17.7	19.3	26	39	50	60	101	135	158	209	225	271
	1500	21			14.8	16.1	21.9	32	42	50	84	113	132	175	188	226
	1200	17			11.9	12.9	17.5	26.3	34	40	67	91	105	140	151	182
	1000	14			9.9	10.8	14.6	21.9	28.5	34	56	76	88	117	126	152
	900	13			8.9	9.7	13.2	19.7	25.6	30	50	68	79	105	113	137
	750	11			7.4	8.1	11.0	16.5	21.4	25.6	42	57	66	88	95	114
Dimension Tables		Horizontal			C-56	C-56	C-56	C-56	C-56	C-58	C-58	C-58	C-58	C-58	C-60	C-60
		Vertical			C-80	C-80	C-80	C-80	C-80	C-82	C-82	C-82	C-82	C-82	C-84	C-84
		Upright			C-96	C-96	C-96	C-96	C-96	C-98	C-98	C-98	C-98	C-98	-	-

THERMAL POWER RATING (kW)

Nominal Reduction Ratio	H.Speed Shaft Speed r/min	Number of Cooling Fans	Size of Reducer													
			9015	9025	9030	9035	9040	9050	9055	9060	9070	9075	9080	9085	9090	9095
Triple Reduction Horizontal Type 56 ▼ 71	1800	-			25	31	41	49	64	68	93	121	118	153	182	197
		1			48	62	71	114	148	143	177	230	314	408	436	472
	1500	-			24	30	39	48	62	66	91	119	116	152	180	194
		1			41	53	61	98	129	124	154	202	276	359	382	412
	1200	-			23	28	37	46	60	63	88	115	113	148	174	187
		1			35	44	51	83	109	106	132	173	237	310	328	353
	1000	-			22	27	35	43	57	61	84	111	109	143	168	180
		1			29	37	43	70	93	89	112	148	202	266	281	302
	900	-			21	26	34	42	56	59	82	109	106	140	164	176
		1			27	34	40	65	86	83	104	138	189	249	262	282
	750	-			19	24	32	40	53	56	78	103	101	134	156	168
		1			23	29	34	56	74	72	90	120	164	217	228	245
Triple Reduction Vertical Type 56 ▼ 71	1800	-			24	30	40	47	62	65	90	117	113	147	169	184
		1			47	60	69	110	143	138	171	222	301	391	405	441
	1500	-			24	29	38	46	61	64	89	116	113	147	170	184
		1			40	52	60	96	125	121	150	196	267	348	361	391
	1200	-			22	28	37	45	59	62	86	113	110	144	167	180
		1			34	43	50	82	107	103	129	170	232	303	315	340
	1000	-			21	26	35	43	56	60	83	109	107	140	162	175
		1			29	36	43	69	91	88	110	146	199	261	272	293
	900	-			21	25	34	42	55	58	81	107	104	138	159	172
		1			27	34	39	65	85	82	103	136	186	245	255	275
	750	-			19	24	32	39	52	55	77	102	100	132	153	164
		1			23	29	34	55	74	71	89	119	162	215	223	240
Triple Reduction Upright Type 56 ▼ 71	1800	-			25	31	43	49	64	68	93	121	118	153		
		1			48	62	74	114	148	143	177	230	314	408		
	1500	-			24	30	41	48	62	66	91	119	116	152		
		1			41	53	64	98	129	124	154	202	276	359		
	1200	-			23	28	39	46	60	63	88	115	113	148		
		1			35	44	54	83	109	106	132	173	237	310		
	1000	-			22	27	37	43	57	61	84	111	109	143		
		1			29	37	45	70	93	89	112	148	202	266		
	900	-			21	26	36	42	56	59	82	109	106	140		
		1			27	34	42	65	86	83	104	138	189	249		
	750	-			19	24	33	40	53	56	78	103	101	134		
		1			23	29	36	56	74	72	90	120	164	217		

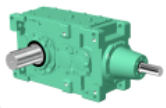

Size of Reducer										L.Speed Shaft Speed r/min	H.Speed Shaft Speed r/min	Nominal Reduction Ratio
9100	**9105**	**9110**	**9115**	**9118**	**9121**	**9126**	**9128**	**9131**	**9136**			
54.596	55.688	55.858	55.170	57.957	56.571	56.571	58.172	55.474	55.474	Exact Reduction Ratio		
409	497	571	706	839	989	1150	1330	1580	1820	**32**	**1800**	
342	415	478	588	702	827	962	1110	1320	1560	**27**	**1500**	
274	333	383	470	563	664	773	899	1060	1250	**21**	**1200**	**56**
229	278	320	392	471	555	646	751	889	1040	**18**	**1000**	
206	251	289	353	424	500	582	677	802	946	**16**	**900**	
172	209	241	294	354	418	487	566	670	790	**13**	**750**	
63.843	60.419	61.300	63.112	61.661	61.378	61.378	63.115	63.459	63.459	Exact Reduction Ratio		
367	442	548	603	763	913	1060	1230	1380	1620	**29**	**1800**	
307	369	456	504	638	763	888	1030	1160	1360	**24**	**1500**	
246	296	365	405	512	613	713	829	932	1100	**19**	**1200**	**63**
206	248	304	338	427	512	596	693	779	919	**16**	**1000**	
185	223	274	305	384	462	537	625	702	828	**14**	**900**	
155	186	228	255	320	386	449	522	587	692	**12**	**750**	
68.512	69.882	70.339	69.474	72.872	70.500	70.500	73.000			Exact Reduction Ratio		
327	397	456	548	660	797	927	1070	*	*	**25**	**1800**	
273	332	381	456	550	666	775	895	*	*	**21**	**1500**	
219	266	305	365	440	535	622	719	*	*	**17**	**1200**	**71**
183	222	255	304	367	447	520	601	*	*	**14**	**1000**	
165	200	230	274	330	403	469	541	*	*	**13**	**900**	
138	167	192	228	275	336	391	452	*	*	**11**	**750**	
C-60	C-60	C-60	C-60	C-62	C-62	C-62	C-64	C-64	C-64	Horizontal	Dimension Tables	
C-84	C-84	C-84	C-84	-	-	-	-	-	-	Vertical		
-	-	-	-	-	-	-	-	-	-	Upright		

Notes

1. Consult us when the high speed shaft speed is over 1800r/min.
2. When the high speed shaft speed is not shown in the table, find it by the interpolation method.
3. When the high speed shaft speed(N) is lower than 750r/min, find the mechanical power rating(P_N) according to the following formula.

$$P_N = P_{750} \times \frac{N}{750}$$

4. Shown in the table are the ratings for the slow speed shaft.
5. Refer to C42 - C49 for the allowable radial and axial load on each shaft.

Size of Reducer										Number of Cooling Fans	H.Speed Shaft Speed r/min	Nominal Reduction Ratio
9100	**9105**	**9110**	**9115**	**9118**	**9121**	**9126**	**9128**	**9131**	**9136**			
243	267	306	344	387	489	489	454	554	554	-	**1800**	Triple Reduction Horizontal Type **56 ▼ 71**
683	750	821	921	639	806	806	748	914	914	1		
240	263	303	339	385	483	483	457	562	562	-	**1500**	
600	657	723	810	634	797	797	754	928	928	1		
233	255	296	330	376	470	470	452	561	561	-	**1200**	
517	565	626	698	621	776	776	746	925	925	1		
225	246	287	319	366	456	456	443	553	553	-	**1000**	
443	483	537	599	604	752	752	731	912	912	1		
220	240	281	313	359	447	447	437	546	546	-	**900**	
415	452	504	561	593	737	737	720	900	900	1		
211	230	269	300	346	430	430	423	530	530	-	**750**	
361	394	440	490	571	709	709	697	875	875	1		
225	249	283	319							-	**1800**	Triple Reduction Vertical Type **56 ▼ 71**
633	699	757	855							1		
226	249	285	321							-	**1500**	
566	623	680	765							1		
223	245	283	317							-	**1200**	
495	543	598	670							1		
218	238	277	309							-	**1000**	
429	469	519	580							1		
214	234	272	304							-	**900**	
403	440	489	546							1		
206	225	263	293							-	**750**	
353	386	430	479							1		
										-	**1800**	Triple Reduction Upright Type **56 ▼ 71**
										1		
										-	**1500**	
										1		
										-	**1200**	
										1		
										-	**1000**	
										1		
										-	**900**	
										1		
										-	**750**	
										1		

Ambient Temperature °C	Temperature Correction Factor	
	Without Fan	With Fan
20	1.00	1.00
30	0.85	0.87
40	0.70	0.73
50	0.55	0.60

Notes

1. Shown in the table are the ratings for models without a fan cooling unit and those with a fan.
(-:none fan, 1:with a fan, 2:with two fans)
2. The values are applicable to continuous operation at ambient temperatures of 20 C or less. When the temperature in out of the range, refer to the temperature correction factor shown above.
3. When the high speed shaft speed is not shown in the table, find it by interpolation method.

MECHANICAL POWER RATING (kW)

Nominal Reduction Ratio	H.Speed Shaft Speed r/min	L.Speed Shaft Speed r/min	Size of Reducer													
			9015	9025	9030	9035	9040	9050	9055	9060	9070	9075	9080	9085	9090	9095
80	Exact Reduction Ratio					79.751			80.552			78.000		75.833	77.090	78.118
	1800	23				19.3	*	*	51	*	*	111	*	172	206	240
	1500	19				16.1	*	*	42	*	*	92	*	143	172	200
	1200	15				12.9	*	*	34	*	*	74	*	115	138	160
	1000	13				10.8	*	*	28.5	*	*	62	*	96	115	134
	900	11				9.7	*	*	25.7	*	*	55	*	86	104	121
	750	9.4				8.1	*	*	21.4	*	*	46	*	72	87	101
90	Exact Reduction Ratio					86.706			90.496			87.529		83.268		85.313
	1800	20				18.8	*	*	41	*	*	107	*	165	*	220
	1500	17				15.7	*	*	34	*	*	89	*	138	*	183
	1200	13				12.6	*	*	27.4	*	*	71	*	110	*	147
	1000	11				10.5	*	*	22.9	*	*	59	*	92	*	123
	900	10				9.4	*	*	20.6	*	*	54	*	83	*	111
	750	8.3				7.9	*	*	17.2	*	*	45	*	69	*	92
Dimension Tables		Horizontal				C-56			C-56			C-58		C-58	C-60	C-60
		Vertical				C-80			C-80			C-82		C-82	C-84	C-84
		Upright				C-96			C-96			C-98		C-98	-	-

THERMAL POWER RATING (kW)

Nominal Reduction Ratio	H.Speed Shaft Speed r/min	Number of Cooling Fans	Size of Reducer													
			9015	9025	9030	9035	9040	9050	9055	9060	9070	9075	9080	9085	9090	9095
Triple Reduction Horizontal Type 80 ▼ 90	1800	-				30			59			110		140	185	197
		1				59			136			210		372	443	471
	1500	-				29			57			108		137	183	194
		1				51			117			182		325	388	412
	1200	-				27			54			103		132	177	187
		1				42			99			155		278	334	353
	1000	-				25			51			99		127	171	180
		1				35			83			131		237	285	301
	900	-				24			50			96		124	167	176
		1				33			77			122		221	267	282
	750	-				23			47			91		118	159	168
		1				28			66			105		191	232	244
Triple Reduction Vertical Type 80 ▼ 90	1800	-				29			57			107		135	173	184
		1				58			132			203		359	412	440
	1500	-				28			56			105		134	173	184
		1				50			115			178		316	367	391
	1200	-				27			53			101		130	170	180
		1				42			97			152		272	320	340
	1000	-				25			51			97		125	165	175
		1				35			82			129		233	276	292
	900	-				24			49			95		122	162	171
		1				32			76			121		218	259	274
	750	-				23			46			90		117	156	164
		1				27			66			104		189	227	239
Triple Reduction Upright Type 80 ▼ 90	1800	-				30			59			110		140		
		1				59			136			210		372		
	1500	-				29			57			108		137		
		1				51			117			182		325		
	1200	-				27			54			103		132		
		1				42			99			155		278		
	1000	-				25			51			99		127		
		1				35			83			131		237		
	900	-				24			50			96		124		
		1				33			77			122		221		
	750	-				23			47			91		118		
		1				28			66			105		191		

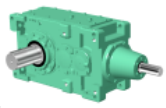

Size of Reducer										L.Speed Shaft Speed r/min	H.Speed Shaft Speed r/min	Nominal Reduction Ratio
9100	**9105**	**9110**	**9115**	**9118**	**9121**	**9126**	**9128**	**9131**	**9136**			
77.451	75.820	83.128	79.474	77.647	76.490	76.490	79.203			Exact Reduction Ratio		
290	353	386	481	587	735	856	988	*	*	**23**	**1800**	
242	295	323	402	490	615	716	826	*	*	**19**	**1500**	
194	237	259	323	393	493	574	663	*	*	**15**	**1200**	**80**
162	198	216	269	328	412	480	554	*	*	**13**	**1000**	
146	178	195	243	296	372	432	499	*	*	**11**	**900**	
122	149	163	203	247	310	361	417	*	*	**9.4**	**750**	
	85.712		93.924	91.765						Exact Reduction Ratio		
*	313	*	408	512	*	*	*	*	*	**20**	**1800**	
*	262	*	341	427	*	*	*	*	*	**17**	**1500**	
*	210	*	273	341	*	*	*	*	*	**13**	**1200**	**90**
*	175	*	228	284	*	*	*	*	*	**11**	**1000**	
*	158	*	206	256	*	*	*	*	*	**10**	**900**	
*	132	*	172	213	*	*	*	*	*	**8.3**	**750**	
C-60	C-60	C-60	C-60	C-62	C-62	C-62	C-64			Horizontal	Dimension Tables	
C-84	C-84	C-84	C-84	-	-	-	-	-	-	Vertical		
-	-	-	-	-	-	-	-	-	-	Upright		

Notes

1. Consult us when the high speed shaft speed is over 1800r/min.
2. When the high speed shaft speed is not shown in the table, find it by the interpolation method.
3. When the high speed shaft speed(N) is lower than 750r/min, find the mechanical power rating(P_N) according to the following formula.

$$P_N = P_{750} \times \frac{N}{750}$$

4. Shown in the table are the ratings for the slow speed shaft.
5. Refer to C42 - C49 for the allowable radial and axial load on each shaft.

Size of Reducer										Number of Cooling Fans	H.Speed Shaft Speed r/min	Nominal Reduction Ratio
9100	**9105**	**9110**	**9115**	**9118**	**9121**	**9126**	**9128**	**9131**	**9136**			
245 689	263 738	304 814	330 885	363 599	487 803	487 803	447 737			- 1	**1800**	Triple Reduction Horizontal Type **80 ▼ 90**
242 605	259 647	300 717	326 778	357 590	481 793	481 793	450 742			- 1	**1500**	
235 521	251 556	293 619	317 671	346 571	468 772	468 772	445 734			- 1	**1200**	
227 447	242 476	284 532	307 575	335 553	454 749	454 749	436 719			- 1	**1000**	
222 418	237 445	278 499	300 539	328 540	445 734	445 734	429 708			- 1	**900**	
213 364	226 388	267 436	288 470	314 517	427 705	427 705	416 686			- 1	**750**	
228 640	245 689	281 753	308 825							- 1	**1800**	Triple Reduction Vertical Type **80 ▼ 90**
229 572	245 613	283 675	309 737							- 1	**1500**	
225 500	241 535	280 593	304 644							- 1	**1200**	
220 433	235 462	274 515	297 558							- 1	**1000**	
216 407	230 433	270 484	292 524							- 1	**900**	
208 357	221 380	261 426	282 460							- 1	**750**	
										- 1	**1800**	Triple Reduction Upright Type **80 ▼ 90**
										- 1	**1500**	
										- 1	**1200**	
										- 1	**1000**	
										- 1	**900**	
										- 1	**750**	

Ambient Temperature °C	Temperature Correction Factor	
	Without Fan	With Fan
20	1.00	1.00
30	0.85	0.87
40	0.70	0.73
50	0.55	0.60

Notes

1. Shown in the table are the ratings for models without a fan cooling unit and those with a fan.
(-:none fan, 1:with a fan, 2:with two fans)
2. The values are applicable to continuous operation at ambient temperatures of 20 C or less. When the temperature in out of the range, refer to the temperature correction factor shown above.
3. When the high speed shaft speed is not shown in the table, find it by interpolation method.

MECHANICAL POWER RATING (kW)

Nominal Reduction Ratio	H.Speed Shaft Speed r/min	L.Speed Shaft Speed r/min	Size of Reducer													
			9015	9025	9030	9035	9040	9050	9055	9060	9070	9075	9080	9085	9090	9095
71	Exact Reduction Ratio															
	1800	25			*	*	*	*	*	*	*	*	*	*	*	*
	1500	21			*	*	*	*	*	*	*	*	*	*	*	*
	1200	17			*	*	*	*	*	*	*	*	*	*	*	*
	1000	14			*	*	*	*	*	*	*	*	*	*	*	*
	900	13			*	*	*	*	*	*	*	*	*	*	*	*
	750	11			*	*	*	*	*	*	*	*	*	*	*	*
80	Exact Reduction Ratio						77.989	79.341			78.120		79.124			
	1800	23				*	26	30	*		80	*	127	*	*	*
	1500	19				*	21	25.3	*		66	*	106	*	*	*
	1200	15				*	17	20.3	*		53	*	84	*	*	*
	1000	13				*	14	16.9	*		44	*	70	*	*	*
	900	11				*	13	15.2	*		40	*	63	*	*	*
	750	9.4				*	11	12.7	*		33	*	53	*	*	*
90	Exact Reduction Ratio						88.991	90.326		91.330	87.529		87.269		90.353	
	1800	20				*	21.0	30	*	45	80	*	124	*	176	*
	1500	17				*	17.5	25.3	*	37	66	*	104	*	147	*
	1200	13				*	14.0	20.3	*	30	53	*	83	*	118	*
	1000	11				*	11.7	16.9	*	25.0	44	*	69	*	98	*
	900	10				*	10.5	15.2	*	22.5	40	*	62	*	89	*
	750	8.3				*	8.8	12.7	*	18.8	33	*	52	*	74	*
Dimension Tables		Horizontal					C-66	C-66		C-68	C-68		C-68		C-70	
		Vertical					C-86	C-86		C-88	C-88		C-88		C-90	
		Upright					C-100	C-100		C-102	C-102		C-102		-	

THERMAL POWER RATING (kW)

Nominal Ratio	H.Speed Shaft Speed r/min	Number of Cooling Fans	Size of Reducer													
			9015	9025	9030	9035	9040	9050	9055	9060	9070	9075	9080	9085	9090	9095
Quadruple Reduction Horizontal Type 71 ▼ 90	1800	-					40	50		70	94		119		157	
	1500	-					40	49		69	93		118		157	
	1200	-					39	47		66	90		115		155	
	1000	-					38	45		63	87		112		151	
	900	-					37	44		62	85		109		149	
	750	-					36	42		59	82		105		143	
Quadruple Reduction Vertical Type 71 ▼ 90	1800	-					44	54		75	103		130		175	
	1500	-					43	52		73	99		127		171	
	1200	-					41	49		69	95		121		165	
	1000	-					40	47		66	91		116		159	
	900	-					39	45		64	88		113		155	
	750	-					37	43		60	84		108		148	
Quadruple Reduction Upright Type 71 ▼ 90	1800	-					43	50		70	94		118			
	1500	-					43	49		68	93		117			
	1200	-					42	47		66	90		115			
	1000	-					41	45		63	87		111			
	900	-					40	44		62	85		109			
	750	-					38	41		59	81		105			

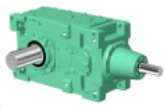

Size of Reducer										L.Speed Shaft Speed r/min	H.Speed Shaft Speed r/min	Nominal Reduction Ratio
9100	**9105**	**9110**	**9115**	**9118**	**9121**	**9126**	**9128**	**9131**	**9136**			
								68.889	68.889	Exact Reduction Ratio		
*	*	*	*	*	*	*	*	1280	1510	**25**	**1800**	
*	*	*	*	*	*	*	*	1070	1260	**21**	**1500**	
*	*	*	*	*	*	*	*	860	1010	**17**	**1200**	**71**
*	*	*	*	*	*	*	*	718	848	**14**	**1000**	
*	*	*	*	*	*	*	*	648	764	**13**	**900**	
*	*	*	*	*	*	*	*	541	638	**11**	**750**	
								78.568	78.568	Exact Reduction Ratio		
*	*	*	*	*	*	*	*	1120	1320	**23**	**1800**	
*	*	*	*	*	*	*	*	941	1110	**19**	**1500**	
*	*	*	*	*	*	*	*	755	891	**15**	**1200**	**80**
*	*	*	*	*	*	*	*	631	745	**13**	**1000**	
*	*	*	*	*	*	*	*	569	671	**11**	**900**	
*	*	*	*	*	*	*	*	475	560	**9.4**	**750**	
88.676		89.695			91.800	91.800	91.022	87.371	87.371	Exact Reduction Ratio		
254	*	379	*	*	615	715	862	1010	1190	**20**	**1800**	
212	*	316	*	*	514	598	720	848	1000	**17**	**1500**	
170	*	254	*	*	412	480	578	680	803	**13**	**1200**	**90**
142	*	212	*	*	344	401	483	568	670	**11**	**1000**	
128	*	191	*	*	310	361	435	512	604	**10**	**900**	
106	*	159	*	*	259	301	363	428	505	**8.3**	**750**	
C-70		C-70			C-72	C-72	C-74	C-74	C-74	Horizontal	Dimension Tables	
C-90		C-90			-	-	-	-	-	Vertical		
-		-			-	-	-	-	-	Upright		

Notes

1. Consult us when the high speed shaft speed is over 1800r/min.
2. When the high speed shaft speed is not shown in the table, find it by the interpolation method.
3. When the high speed shaft speed(N) is lower than 750r/min, find the mechanical power rating(P_N) according to the following formula.

$$P_N = P_{750} \times \frac{N}{750}$$

4. Shown in the table are the ratings for the slow speed shaft.
5. Refer to C42 - C49 for the allowable radial and axial load on each shaft.

Size of Reducer										Number of Cooling Fans	H.Speed Shaft Speed r/min	Nominal Reduction Ratio
9100	**9105**	**9110**	**9115**	**9118**	**9121**	**9126**	**9128**	**9131**	**9136**			
202		259			359	359	386	472	472	-	**1800**	Quadruple Reduction Horizontal Type **71** ▼ **90**
204		259			361	361	395	484	484	-	**1500**	
202		255			356	356	397	488	488	-	**1200**	
199		250			349	349	394	484	484	-	**1000**	
196		246			344	344	390	480	480	-	**900**	
190		237			334	334	381	469	469	-	**750**	
228		288								-	**1800**	Quadruple Reduction Vertical Type **71** ▼ **90**
224		281								-	**1500**	
216		271								-	**1200**	
209		262								-	**1000**	
205		256								-	**900**	
197		245								-	**750**	
										-	**1800**	Quadruple Reduction Upright Type **71** ▼ **90**
										-	**1500**	
										-	**1200**	
										-	**1000**	
										-	**900**	
										-	**750**	

Ambient Temperature °C	Temperature Correction Factor	
	Without Fan	With Fan
20	1.00	1.00
30	0.85	0.87
40	0.70	0.73
50	0.55	0.60

Notes

1. Shown in the table are the ratings for models without a fan cooling unit and those with a fan.
(-:none fan, 1:with a fan, 2:with two fans)
2. The values are applicable to continuous operation at ambient temperatures of 20 C or less. When the temperature in out of the range, refer to the temperature correction factor shown above.
3. When the high speed shaft speed is not shown in the table, find it by interpolation method.

MECHANICAL POWER RATING (kW)

Nominal Reduction Ratio	H.Speed Shaft Speed r/min	L.Speed Shaft Speed r/min	Size of Reducer													
			9015	9025	9030	9035	9040	9050	9055	9060	9070	9075	9080	9085	9090	9095
100	Exact Reduction Ratio						99.259	103.98	98.871	102.71	97.650	96.720	96.444	96.432	103.82	99.991
	1800	18					20.1	29.8	30	45	78	80	118	127	160	188
	1500	15					16.8	24.9	25.3	37	65	66	99	106	133	157
	1200	12					13.5	19.9	20.3	30	52	53	79	84	107	126
	1000	10					11.2	16.6	16.9	25.0	43	44	66	70	89	105
	900	9.0					10.1	15.0	15.2	22.5	39	40	59	63	80	94
	750	7.5					8.4	12.5	12.7	18.8	33	33	49	53	67	79
112	Exact Reduction Ratio						113.26	118.37	111.08	119.69	109.41	108.54	106.37	105.89	112.94	115.20
	1800	16					16.5	24.5	30	38	65	80	102	127	141	170
	1500	13					13.8	20.4	25.3	31	54	66	85	106	118	142
	1200	11					11.0	16.4	20.3	25.5	43	53	68	84	95	114
	1000	8.9					9.2	13.7	16.9	21.3	36	44	57	70	79	95
	900	8.0					8.3	12.3	15.2	19.2	33	40	51	63	71	86
	750	6.7					6.9	10.3	12.7	16.0	27.5	33	43	53	59	71
125	Exact Reduction Ratio						122.72	130.09	129.57	127.97	127.97	120.90	126.39	117.54	129.78	124.99
	1800	14					16.3	23.9	30	38	60	80	90	124	128	151
	1500	12					13.6	19.9	25.3	32	50	66	75	104	107	126
	1200	9.6					10.9	16.0	20.3	26.0	40	53	60	83	86	101
	1000	8.0					9.1	13.3	16.9	21.7	33	44	50	69	71	84
	900	7.2					8.2	12.0	15.2	19.6	30	40	45	62	64	76
	750	6.0					6.8	10.0	12.7	16.3	25.2	33	38	52	53	63
Dimension Tables		Horizontal					C-66	C-66	C-66	C-68	C-68	C-68	C-68	C-68	C-70	C-70
		Vertical					C-86	C-86	C-86	C-88	C-88	C-88	C-88	C-88	C-90	C-90
		Upright					C-100	C-100	C-100	C-102	C-102	C-102	C-102	C-102	-	-

THERMAL POWER RATING (kW)

Nominal Ratio	H.Speed Shaft Speed r/min	Number of Cooling Fans	Size of Reducer													
			9015	9025	9030	9035	9040	9050	9055	9060	9070	9075	9080	9085	9090	9095
Quadruple Reduction Horizontal Type 100 ▼ 125	1800	-					39	46	57	64	87	107	110	135	147	164
	1500	-					38	45	55	63	86	105	109	133	147	163
	1200	-					36	43	53	60	83	102	106	129	144	160
	1000	-					35	41	50	58	80	98	103	125	140	156
	900	-					34	40	49	56	78	96	100	122	138	153
	750	-					32	38	46	54	74	91	96	117	133	148
Quadruple Reduction Vertical Type 100 ▼ 125	1800	-					41	49	60	69	94	115	120	146	162	180
	1500	-					40	47	58	66	91	111	116	142	158	176
	1200	-					38	45	55	63	86	106	111	135	152	169
	1000	-					36	43	52	60	83	101	107	130	147	163
	900	-					35	41	50	58	80	98	104	126	143	159
	750	-					33	39	47	55	76	93	99	120	137	152
Quadruple Reduction Upright Type 100 ▼ 125	1800	-					41	46	56	64	87	107	110	135		
	1500	-					40	45	55	63	85	105	109	133		
	1200	-					38	43	53	60	83	101	106	129		
	1000	-					37	41	50	58	80	98	103	125		
	900	-					36	40	49	56	78	95	100	122		
	750	-					34	38	46	54	74	91	96	117		

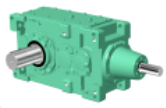

Size of Reducer										L.Speed Shaft Speed r/min	H.Speed Shaft Speed r/min	Nominal Reduction Ratio
9100	**9105**	**9110**	**9115**	**9118**	**9121**	**9126**	**9128**	**9131**	**9136**			
101.85	98.135	97.789	101.65	98.060	99.600	99.600	98.756	99.948	99.948	Exact Reduction Ratio		
232	274	348	401	500	567	660	796	889	1040	**18**	**1800**	
194	229	290	335	418	474	552	665	742	876	**15**	**1500**	
155	184	233	269	335	380	443	534	596	703	**12**	**1200**	**100**
129	153	194	224	280	318	370	446	498	587	**10**	**1000**	
117	138	175	202	252	286	333	402	448	529	**9.0**	**900**	
97	115	146	169	210	239	278	335	374	442	**7.5**	**750**	
109.29	111.48	112.21	110.83	113.61	115.20	115.20	112.18	110.36	110.36	Exact Reduction Ratio		
206	251	287	368	433	492	572	702	806	951	**16**	**1800**	
172	209	240	308	362	411	478	586	673	794	**13**	**1500**	
138	168	192	247	290	329	383	470	540	637	**11**	**1200**	**112**
115	140	161	206	242	275	320	393	451	532	**8.9**	**1000**	
104	126	145	186	218	248	288	354	406	480	**8.0**	**900**	
86	105	121	155	181	207	241	295	339	400	**6.7**	**750**	
124.14	120.95	119.20	126.78	123.87	124.99	124.99	121.72	126.25	126.25	Exact Reduction Ratio		
191	223	286	304	397	454	528	648	706	833	**14**	**1800**	
159	186	239	253	332	379	441	541	590	696	**12**	**1500**	
127	149	191	203	266	304	354	434	473	558	**9.6**	**1200**	**125**
106	124	160	170	222	254	295	362	395	466	**8.0**	**1000**	
96	112	144	153	200	229	266	327	356	420	**7.2**	**900**	
80	94	120	127	167	191	222	273	297	350	**6.0**	**750**	
C-70	C-70	C-70	C-70	C-72	C-72	C-72	C-74	C-74	C-74	Horizontal	Dimension Tables	
C-90	C-90	C-90	C-90	-	-	-	-	-	-	Vertical		
-	-	-	-	-	-	-	-	-	-	Upright		

Notes

1. Consult us when the high speed shaft speed is over 1800r/min.
2. When the high speed shaft speed is not shown in the table, find it by the interpolation method.
3. When the high speed shaft speed(N) is lower than 750r/min, find the mechanical power rating(P_N) according to the following formula.

$$P_N = P_{750} \times \frac{N}{750}$$

4. Shown in the table are the ratings for the slow speed shaft.
5. Refer to C42 - C49 for the allowable radial and axial load on each shaft.

Size of Reducer										Number of Cooling Fans	H.Speed Shaft Speed r/min	Nominal Reduction Ratio
9100	**9105**	**9110**	**9115**	**9118**	**9121**	**9126**	**9128**	**9131**	**9136**			
189	211	252	275	302	355	355	374	470	470	-	**1800**	Quadruple Reduction Horizontal Type **100 ▼ 125**
190	212	250	273	300	355	355	380	470	470	-	**1500**	
188	209	245	268	293	350	350	380	464	464	-	**1200**	
184	205	239	261	285	342	342	375	454	454	-	**1000**	
181	202	235	256	280	337	337	371	447	447	-	**900**	
176	195	227	247	270	326	326	362	433	433	-	**750**	
211	236	275	300							-	**1800**	Quadruple Reduction Vertical Type **100 ▼ 125**
207	230	268	293							-	**1500**	
200	223	258	282							-	**1200**	
193	215	249	272							-	**1000**	
189	210	243	265							-	**900**	
181	202	233	254							-	**750**	
										-	**1800**	Quadruple Reduction Upright Type **100 ▼ 125**
										-	**1500**	
										-	**1200**	
										-	**1000**	
										-	**900**	
										-	**750**	

Ambient Temperature °C	Temperature Correction Factor	
	Without Fan	With Fan
20	1.00	1.00
30	0.85	0.87
40	0.70	0.73
50	0.55	0.60

Notes

1. Shown in the table are the ratings for models without a fan cooling unit and those with a fan.
(-:none fan, 1:with a fan, 2:with two fans)
2. The values are applicable to continuous operation at ambient temperatures of 20 C or less. When the temperature in out of the range, refer to the temperature correction factor shown above.
3. When the high speed shaft speed is not shown in the table, find it by interpolation method.

MECHANICAL POWER RATING (kW)

Nominal Reduction Ratio	H.Speed Shaft Speed r/min	L.Speed Shaft Speed r/min	Size of Reducer													
			9015	9025	9030	9035	9040	9050	9055	9060	9070	9075	9080	9085	9090	9095
140	Exact Reduction Ratio						140.03	148.10	145.56	149.12	143.38	135.67	139.40	129.07	141.18	144.00
	1800	13					13.4	19.6	25.6	30	50	69	78	107	113	137
	1500	11					11.2	16.4	21.4	25.6	41	58	65	89	95	114
	1200	8.6					8.9	13.1	17.1	20.5	33	46	52	71	76	91
	1000	7.1					7.5	10.9	14.3	17.1	28.0	38	43	59	63	76
	900	6.4					6.7	9.9	12.9	15.4	25.2	35	39	54	57	69
	750	5.4					5.6	8.2	10.7	12.9	21.0	29.2	32	45	47	57
160	Exact Reduction Ratio							158.68	162.11	156.75	152.99	158.44	158.25	154.04	163.15	156.24
	1800	11						17.1	25.5	25.7	39	63	68	95	102	121
	1500	9.4						14.3	21.3	21.4	33	53	57	79	85	101
	1200	7.5						11.4	17.1	17.1	26.6	42	46	64	68	81
	1000	6.3						9.5	14.2	14.3	22.1	35	38	53	57	67
	900	5.6						8.6	12.8	12.8	19.9	31	34	48	51	61
	750	4.7						7.1	10.7	10.7	16.6	26.6	28.7	40	43	50
180	Exact Reduction Ratio							180.65	182.13	182.66	171.41	177.79	174.54	169.14	177.48	181.03
	1800	10						16.1	20.5	25.1	39	53	62	82	90	109
	1500	8.3						13.4	17.1	20.9	33	44	52	68	75	91
	1200	6.7						10.8	13.7	16.8	26.6	35	42	54	60	73
	1000	5.6						9.0	11.4	14.0	22.1	29.7	35	45	50	61
	900	5.0						8.1	10.3	12.6	19.9	26.7	31	41	45	55
	750	4.2						6.7	8.6	10.5	16.6	22.3	26.4	34	38	45
Dimension Tables		Horizontal					C-66	C-66	C-66	C-68	C-68	C-68	C-68	C-68	C-70	C-70
		Vertical					C-86	C-86	C-86	C-88	C-88	C-88	C-88	C-88	C-90	C-90
		Upright					C-100	C-100	C-100	C-102	C-102	C-102	C-102	C-102	-	-

THERMAL POWER RATING (kW)

Nominal Ratio	H.Speed Shaft Speed r/min	Number of Cooling Fans	Size of Reducer													
			9015	9025	9030	9035	9040	9050	9055	9060	9070	9075	9080	9085	9090	9095
Quadruple Reduction Horizontal Type 140 ▼ 180	1800	-					38	40	55	59	81	102	101	130	144	155
	1500	-					37	38	53	56	78	100	98	127	140	151
	1200	-					35	36	51	53	73	97	93	123	135	145
	1000	-					34	34	48	50	70	93	89	119	129	139
	900	-					33	32	47	48	67	91	86	117	126	135
	750	-					31	30	45	45	63	86	81	111	120	129
Quadruple Reduction Vertical Type 140 ▼ 180	1800	-					40	42	58	61	84	109	107	139	152	164
	1500	-					39	39	55	58	81	105	102	135	147	158
	1200	-					37	37	52	54	75	100	96	129	139	150
	1000	-					35	34	50	51	71	96	91	123	133	143
	900	-					34	33	48	49	69	93	88	120	129	138
	750	-					32	30	45	46	64	88	82	114	122	131
Quadruple Reduction Upright Type 140 ▼ 180	1800	-					39	40	54	59	81	102	101	129		
	1500	-					38	38	53	56	78	100	98	127		
	1200	-					37	36	51	53	73	96	93	123		
	1000	-					35	33	48	50	70	93	89	119		
	900	-					34	32	47	48	67	91	86	116		
	750	-					33	30	44	45	63	86	81	111		

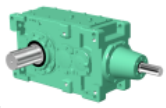

Size of Reducer										L.Speed Shaft Speed r/min	H.Speed Shaft Speed r/min	Nominal Reduction Ratio
9100	**9105**	**9110**	**9115**	**9118**	**9121**	**9126**	**9128**	**9131**	**9136**			
133.22	135.88	136.77	135.09	146.39	142.31	142.31	145.23	136.02	136.02	Exact Reduction Ratio		**140**
170	206	236	303	337	399	464	544	656	774	**13**	**1800**	
141	172	197	253	281	333	388	454	548	646	**11**	**1500**	
113	138	158	203	226	267	311	364	439	518	**8.6**	**1200**	
95	115	132	169	188	223	260	304	367	433	**7.1**	**1000**	
85	104	119	152	170	201	234	274	330	390	**6.4**	**900**	
71	86	99	127	142	168	195	229	276	325	**5.4**	**750**	
158.28	147.43	153.67	154.53	150.98	154.40	154.40	157.57	155.60	155.60	Exact Reduction Ratio		**160**
150	183	222	250	327	368	429	502	574	678	**11**	**1800**	
125	153	186	208	273	307	358	419	480	566	**9.4**	**1500**	
100	123	149	167	219	246	287	336	385	454	**7.5**	**1200**	
84	102	124	139	183	206	240	281	321	379	**6.3**	**1000**	
75	92	112	126	165	185	216	253	289	341	**5.6**	**900**	
63	77	93	105	137	155	180	211	241	285	**4.7**	**750**	
169.85	173.25	181.61	174.16	178.43	177.88	177.88	179.00	171.03	171.03	Exact Reduction Ratio		**180**
133	162	189	236	277	320	373	443	523	617	**10**	**1800**	
111	135	157	197	231	267	311	370	437	515	**8.3**	**1500**	
89	108	126	158	185	214	249	296	350	413	**6.7**	**1200**	
74	90	105	131	155	179	208	247	292	345	**5.6**	**1000**	
67	81	95	118	139	161	187	223	263	311	**5.0**	**900**	
56	68	79	99	116	134	156	186	220	259	**4.2**	**750**	
C-70	C-70	C-70	C-70	C-72	C-72	C-72	C-74	C-74	C-74	Horizontal	Dimension Tables	
C-90	C-90	C-90	C-90	-	-	-	-	-	-	Vertical		
-	-	-	-	-	-	-	-	-	-	Upright		

Notes

1. Consult us when the high speed shaft speed is over 1800r/min.
2. When the high speed shaft speed is not shown in the table, find it by the interpolation method.
3. When the high speed shaft speed(N) is lower than 750r/min, find the mechanical power rating(P_N) according to the following formula.

$$P_N = P_{750} \times \frac{N}{750}$$

4. Shown in the table are the ratings for the slow speed shaft.
5. Refer to C42 - C49 for the allowable radial and axial load on each shaft.

Size of Reducer										Number of Cooling Fans	H.Speed Shaft Speed r/min	Nominal Reduction Ratio
9100	**9105**	**9110**	**9115**	**9118**	**9121**	**9126**	**9128**	**9131**	**9136**			
188	205	242	265	291	339	339	372	457	457	-	**1800**	Quadruple Reduction Horizontal Type **140 ▼ 180**
184	201	237	258	288	334	334	369	456	456	-	**1500**	
178	194	228	248	281	325	325	361	444	444	-	**1200**	
171	186	219	238	273	316	316	352	431	431	-	**1000**	
167	182	213	232	268	309	309	346	422	422	-	**900**	
160	174	204	221	258	298	298	334	406	406	-	**750**	
200	218	256	279							-	**1800**	Quadruple Reduction Vertical Type **140 ▼ 180**
194	211	247	269							-	**1500**	
184	200	235	255							-	**1200**	
176	192	224	244							-	**1000**	
172	186	218	237							-	**900**	
163	177	207	225							-	**750**	
										-	**1800**	Quadruple Reduction Upright Type **140 ▼ 180**
										-	**1500**	
										-	**1200**	
										-	**1000**	
										-	**900**	
										-	**750**	

Ambient Temperature °C	Temperature Correction Factor	
	Without Fan	With Fan
20	1.00	1.00
30	0.85	0.87
40	0.70	0.73
50	0.55	0.60

Notes

1. Shown in the table are the ratings for models without a fan cooling unit and those with a fan.
(-:none fan, 1:with a fan, 2:with two fans)
2. The values are applicable to continuous operation at ambient temperatures of 20 C or less. When the temperature in out of the range, refer to the temperature correction factor shown above.
3. When the high speed shaft speed is not shown in the table, find it by interpolation method.

MECHANICAL POWER RATING (kW)

Nominal Reduction Ratio	H.Speed Shaft Speed r/min	L.Speed Shaft Speed r/min	Size of Reducer													
			9015	9025	9030	9035	9040	9050	9055	9060	9070	9075	9080	9085	9090	9095
200	Exact Reduction Ratio							207.95	197.74	205.42	191.23		192.89	192.86	207.64	196.41
	1800	9.0						15.0	17.1	24.3	39		59	68	80	96
	1500	7.5						12.5	14.3	20.3	33		49	57	67	80
	1200	6.0						10.0	11.4	16.3	26.6		39	46	53	64
	1000	5.0						8.4	9.5	13.6	22.1		33	38	45	53
	900	4.5						7.5	8.6	12.2	19.9		30	34	40	48
	750	3.8						6.3	7.1	10.2	16.6		25.0	28.7	33	40
224	Exact Reduction Ratio							236.74	222.15	239.37	214.27	212.55	212.75	211.77	225.88	230.40
	1800	8.0						12.3	16.8	19.2	33	39	51	65	71	86
	1500	6.7						10.3	14.0	16.0	28.1	33	43	54	59	71
	1200	5.4						8.2	11.3	12.8	22.5	26.6	34	44	47	57
	1000	4.5						6.9	9.4	10.7	18.8	22.1	28.8	36	39	48
	900	4.0						6.2	8.5	9.6	16.9	19.9	25.9	33	35	43
	750	3.3						5.2	7.1	8.0	14.1	16.6	21.6	27.6	30	36
250	Exact Reduction Ratio							260.18	259.14	255.94	250.61	236.76	252.78	235.08	259.56	249.98
	1800	7.2						12.0	16.0	19.6	30	39	45	62	64	76
	1500	6.0						10.0	13.4	16.3	25.8	33	38	52	53	63
	1200	4.8						8.0	10.7	13.1	20.6	26.6	30	42	43	50
	1000	4.0						6.7	8.9	10.9	17.2	22.2	25.5	35	36	42
	900	3.6						6.0	8.0	9.8	15.5	19.9	22.9	31	32	38
	750	3.0						5.0	6.7	8.2	12.9	16.6	19.1	26.4	27.1	31
Dimension Tables		Horizontal						C-66	C-66	C-68	C-68	C-68	C-68	C-68	C-70	C-70
		Vertical						C-86	C-86	C-88	C-88	C-88	C-88	C-88	C-90	C-90
		Upright						C-100	C-100	C-102	C-102	C-102	C-102	C-102	-	-

THERMAL POWER RATING (kW)

Nominal Ratio	H.Speed Shaft Speed r/min	Number of Cooling Fans	Size of Reducer													
			9015	9025	9030	9035	9040	9050	9055	9060	9070	9075	9080	9085	9090	9095
Quadruple Reduction Horizontal Type 200 ▼ 250	1800	-						37	45	54	74	91	94	114	128	142
	1500	-						35	43	52	71	87	91	110	124	137
	1200	-						33	40	48	67	82	86	104	118	131
	1000	-						31	38	46	64	78	82	99	112	125
	900	-						30	36	44	62	75	79	96	109	121
	750	-						28	34	41	58	71	75	90	103	114
Quadruple Reduction Vertical Type 200 ▼ 250	1800	-						38	47	56	77	94	98	119	134	149
	1500	-						36	44	53	74	90	94	114	129	143
	1200	-						34	41	50	69	84	88	107	121	134
	1000	-						31	38	47	65	79	84	101	115	128
	900	-						30	37	45	63	76	81	98	111	123
	750	-						28	34	42	59	72	76	92	105	116
Quadruple Reduction Upright Type 200 ▼ 250	1800	-						37	45	54	74	91	94	114		
	1500	-						35	43	52	71	87	91	110		
	1200	-						33	40	48	67	82	86	104		
	1000	-						31	38	46	64	78	82	99		
	900	-						30	36	44	62	75	79	96		
	750	-						28	34	41	58	71	75	90		

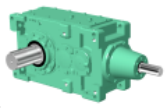

Size of Reducer										L.Speed Shaft Speed r/min	H.Speed Shaft Speed r/min	Nominal Reduction Ratio
9100	**9105**	**9110**	**9115**	**9118**	**9121**	**9126**	**9128**	**9131**	**9136**			
203.69	187.97	195.58	205.82	190.95	193.00	193.00	194.21	195.65	195.65	Exact Reduction Ratio		
117	144	172	200	259	295	344	408	458	540	**9.0**	**1800**	
97	120	143	167	216	246	287	341	382	451	**7.5**	**1500**	
78	96	115	133	173	198	230	273	307	362	**6.0**	**1200**	**200**
65	80	96	111	145	165	192	228	256	302	**5.0**	**1000**	
58	72	86	100	130	148	173	205	230	272	**4.5**	**900**	
49	60	72	84	109	124	144	171	192	227	**3.8**	**750**	
218.59	222.96	224.42	221.65	230.04	226.29	226.29	229.95	215.37	215.37	Exact Reduction Ratio		
104	126	145	172	215	252	294	345	417	491	**8.0**	**1800**	
86	105	121	143	180	211	245	288	348	410	**6.7**	**1500**	
69	84	97	115	144	169	196	231	279	329	**5.4**	**1200**	**224**
58	70	81	96	120	141	164	193	233	274	**4.5**	**1000**	
52	63	73	86	108	127	148	174	209	247	**4.0**	**900**	
43	53	60	72	90	106	123	145	175	206	**3.3**	**750**	
248.28	241.90	238.39	253.56	237.26	245.51	245.51	249.49	246.37	246.37	Exact Reduction Ratio		
96	112	144	153	209	233	271	319	365	430	**7.2**	**1800**	
80	94	120	127	174	194	226	266	304	359	**6.0**	**1500**	
64	75	96	102	140	156	181	213	244	288	**4.8**	**1200**	**250**
53	62	80	85	117	130	151	178	203	240	**4.0**	**1000**	
48	56	72	77	105	117	136	160	183	216	**3.6**	**900**	
40	47	60	64	87	97	113	134	153	180	**3.0**	**750**	
C-70	C-70	C-70	C-70	C-72	C-72	C-72	C-74	C-74	C-74	Horizontal	Dimension Tables	
C-90	C-90	C-90	C-90	-	-	-	-	-	-	Vertical		
-	-	-	-	-	-	-	-	-	-	Upright		

Notes

1. Consult us when the high speed shaft speed is over 1800r/min.
2. When the high speed shaft speed is not shown in the table, find it by the interpolation method.
3. When the high speed shaft speed(N) is lower than 750r/min, find the mechanical power rating(P_N) according to the following formula.

$$P_N = P_{750} \times \frac{N}{750}$$

4. Shown in the table are the ratings for the slow speed shaft.
5. Refer to C42 - C49 for the allowable radial and axial load on each shaft.

Size of Reducer										Number of Cooling Fans	H.Speed Shaft Speed r/min	Nominal Reduction Ratio
9100	**9105**	**9110**	**9115**	**9118**	**9121**	**9126**	**9128**	**9131**	**9136**			
167	186	217	237	273	325	325	352	426	426	-	**1800**	Quadruple Reduction Horizontal Type **200 ▼ 250**
162	180	210	229	265	317	317	344	417	417	-	**1500**	
155	173	200	218	254	306	306	331	402	402	-	**1200**	
149	165	191	208	244	294	294	318	388	388	-	**1000**	
145	161	186	203	238	287	287	310	379	379	-	**900**	
137	152	176	192	226	275	275	296	362	362	-	**750**	
176	196	226	247							-	**1800**	Quadruple Reduction Vertical Type **200 ▼ 250**
169	188	217	237							-	**1500**	
160	178	205	224							-	**1200**	
153	169	195	213							-	**1000**	
148	164	189	206							-	**900**	
140	155	179	195							-	**750**	
										-	**1800**	Quadruple Reduction Upright Type **200 ▼ 250**
										-	**1500**	
										-	**1200**	
										-	**1000**	
										-	**900**	
										-	**750**	

Ambient Temperature °C	Temperature Correction Factor	
	Without Fan	With Fan
20	1.00	1.00
30	0.85	0.87
40	0.70	0.73
50	0.55	0.60

Notes

1. Shown in the table are the ratings for models without a fan cooling unit and those with a fan.
(-:none fan, 1:with a fan, 2:with two fans)
2. The values are applicable to continuous operation at ambient temperatures of 20 C or less. When the temperature in out of the range, refer to the temperature correction factor shown above.
3. When the high speed shaft speed is not shown in the table, find it by interpolation method.

MECHANICAL POWER RATING (kW)

Nominal Reduction Ratio	H.Speed Shaft Speed r/min	L.Speed Shaft Speed r/min	Size of Reducer													
			9015	9025	9030	9035	9040	9050	9055	9060	9070	9075	9080	9085	9090	9095
280	Exact Reduction Ratio							296.20	291.13	298.24	280.79	265.69	278.80	258.13	282.35	288.00
	1800	6.4						9.9	12.9	15.4	25.7	35	39	54	57	69
	1500	5.4						8.2	10.7	12.9	21.5	29.8	32	45	47	57
	1200	4.3						6.6	8.6	10.3	17.2	23.9	26.4	36	38	46
	1000	3.6						5.5	7.2	8.6	14.4	19.9	22.0	30	31	38
	900	3.2						4.9	6.5	7.7	12.9	17.9	19.8	27.1	28.8	34
	750	2.7						4.1	5.4	6.4	10.8	15.0	16.5	22.6	24.0	28.9
315	Exact Reduction Ratio							315.95	324.22	332.51	322.08	310.27	318.63	308.07	308.36	312.47
	1800	5.7						9.2	12.8	13.8	22.5	32	34	48	52	61
	1500	4.8						7.7	10.7	11.5	18.7	27.2	28.9	40	43	50
	1200	3.8						6.2	8.6	9.2	15.0	21.8	23.1	32	35	40
	1000	3.2						5.2	7.1	7.7	12.5	18.2	19.3	26.8	29.3	34
	900	2.9						4.6	6.4	6.9	11.3	16.4	17.4	24.2	26.3	30
	750	2.4						3.9	5.4	5.8	9.4	13.6	14.5	20.2	22.0	25.5
355	Exact Reduction Ratio							367.08	364.25	369.46	343.56	348.18	355.25	338.28	353.71	341.25
	1800	5.1						8.0	10.3	12.5	21.1	27.3	31	41	45	55
	1500	4.2						6.6	8.6	10.4	17.6	22.8	25.9	34	38	46
	1200	3.4						5.3	6.9	8.3	14.1	18.3	20.7	27.6	30	37
	1000	2.8						4.4	5.7	6.9	11.7	15.2	17.3	23.0	25.5	31
	900	2.5						4.0	5.2	6.2	10.6	13.7	15.6	20.7	23.0	28.1
	750	2.1						3.3	4.3	5.2	8.8	11.4	13.0	17.3	19.2	23.4
Dimension Tables		Horizontal						C-66	C-66	C-68	C-68	C-68	C-68	C-68	C-70	C-70
		Vertical						C-86	C-86	C-88	C-88	C-88	C-88	C-88	C-90	C-90
		Upright						C-100	C-100	C-102	C-102	C-102	C-102	C-102	-	-

THERMAL POWER RATING (kW)

Nominal Ratio	H.Speed Shaft Speed r/min	Number of Cooling Fans	Size of Reducer													
			9015	9025	9030	9035	9040	9050	9055	9060	9070	9075	9080	9085	9090	9095
Quadruple Reduction Horizontal Type 280 ▼ 355	1800	-						37	43	54	75	87	94	109	127	137
	1500	-						35	41	52	72	83	91	105	123	132
	1200	-						33	39	49	68	78	86	100	117	126
	1000	-						31	36	46	64	74	82	94	112	120
	900	-						30	35	44	62	72	80	91	109	116
	750	-						28	32	42	58	67	75	86	103	110
Quadruple Reduction Vertical Type 280 ▼ 355	1800	-						38	45	56	78	90	99	114	133	143
	1500	-						36	42	54	74	85	95	109	128	137
	1200	-						34	39	50	70	80	89	102	121	129
	1000	-						31	37	47	66	75	84	96	114	123
	900	-						30	35	45	63	73	81	93	111	119
	750	-						28	33	42	59	68	76	87	104	112
Quadruple Reduction Upright Type 280 ▼ 355	1800	-						37	43	54	75	87	94	109		
	1500	-						35	41	52	72	83	91	105		
	1200	-						33	39	49	68	78	86	99		
	1000	-						31	36	46	64	74	82	94		
	900	-						30	35	44	62	71	80	91		
	750	-						28	32	42	58	67	75	86		

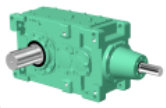

Size of Reducer										L.Speed Shaft Speed r/min	H.Speed Shaft Speed r/min	Nominal Reduction Ratio
9100	**9105**	**9110**	**9115**	**9118**	**9121**	**9126**	**9128**	**9131**	**9136**			
266.44	271.77	273.54	270.18	280.39	288.00	288.00	283.41	291.16	291.16	Exact Reduction Ratio		
85	104	119	152	177	199	231	281	309	365	**6.4**	**1800**	
71	86	99	127	148	166	193	234	258	304	**5.4**	**1500**	
57	69	79	102	118	133	155	188	207	244	**4.3**	**1200**	**280**
47	58	66	85	99	111	129	157	172	203	**3.6**	**1000**	
43	52	60	76	89	100	116	141	155	183	**3.2**	**900**	
35	43	50	64	74	83	97	118	129	153	**2.7**	**750**	
301.20	294.86	323.28	309.07	320.45	312.47	312.47	307.49			Exact Reduction Ratio		
75	92	101	126	155	183	213	259			**5.7**	**1800**	
63	77	84	105	129	153	178	216			**4.8**	**1500**	
50	61	67	84	104	122	142	173			**3.8**	**1200**	**315**
42	51	56	70	86	102	119	144			**3.2**	**1000**	
38	46	50	63	78	92	107	130			**2.9**	**900**	
31	38	42	52	65	77	89	108			**2.4**	**750**	
344.23	333.33	369.46	365.26	356.86	341.25	341.25	347.61			Exact Reduction Ratio		
66	81	88	106	139	168	195	229			**5.1**	**1800**	
55	68	73	89	116	140	163	191			**4.2**	**1500**	
44	54	59	71	93	112	131	153			**3.4**	**1200**	**355**
37	45	49	59	78	93	109	128			**2.8**	**1000**	
33	41	44	53	70	84	98	115			**2.5**	**900**	
27.8	34	37	44	58	70	82	96			**2.1**	**750**	
C-70	C-70	C-70	C-70	C-72	C-72	C-72	C-74	C-74	C-74	Horizontal	Dimension Tables	
C-90	C-90	C-90	C-90	-	-	-	-	-	-	Vertical		
-	-	-	-	-	-	-	-	-	-	Upright		

Notes

1. Consult us when the high speed shaft speed is over 1800r/min.
2. When the high speed shaft speed is not shown in the table, find it by the interpolation method.
3. When the high speed shaft speed(N) is lower than 750r/min, find the mechanical power rating(P_N) according to the following formula.

$$P_N = P_{750} \times \frac{N}{750}$$

4. Shown in the table are the ratings for the slow speed shaft.
5. Refer to C42 - C49 for the allowable radial and axial load on each shaft.

Size of Reducer										Number of Cooling Fans	H.Speed Shaft Speed r/min	Nominal Reduction Ratio
9100	**9105**	**9110**	**9115**	**9118**	**9121**	**9126**	**9128**	**9131**	**9136**			
167	180	208	228	248	304	304	340	421	421	-	**1800**	Quadruple Reduction Horizontal Type **280 ▼ 355**
162	175	202	220	240	295	295	332	412	412	-	**1500**	
155	167	192	210	228	282	282	319	397	397	-	**1200**	
149	160	184	200	218	270	270	306	383	383	-	**1000**	
145	155	179	195	212	263	263	299	374	374	-	**900**	
138	147	169	184	200	250	250	285	358	358	-	**750**	
176	189	217	237							-	**1800**	Quadruple Reduction Vertical Type **280 ▼ 355**
169	182	208	227							-	**1500**	
160	172	197	215							-	**1200**	
153	164	188	204							-	**1000**	
148	159	182	198							-	**900**	
140	150	172	187							-	**750**	
										-	**1800**	Quadruple Reduction Upright Type **280 ▼ 355**
										-	**1500**	
										-	**1200**	
										-	**1000**	
										-	**900**	
										-	**750**	

Ambient Temperature °C	Temperature Correction Factor	
	Without Fan	With Fan
20	1.00	1.00
30	0.85	0.87
40	0.70	0.73
50	0.55	0.60

Notes

1. Shown in the table are the ratings for models without a fan cooling unit and those with a fan.
(-:none fan, 1:with a fan, 2:with two fans)
2. The values are applicable to continuous operation at ambient temperatures of 20 C or less. When the temperature in out of the range, refer to the temperature correction factor shown above.
3. When the high speed shaft speed is not shown in the table, find it by interpolation method.

MECHANICAL POWER RATING (kW)

Nominal Reduction Ratio	H.Speed Shaft Speed r/min	L.Speed Shaft Speed r/min	Size of Reducer													
			9015	9025	9030	9035	9040	9050	9055	9060	9070	9075	9080	9085	9090	9095
400	Exact Reduction Ratio								388.53			399.38		386.60		391.44
	1800	4.5							9.7			23.8		36		48
	1500	3.8							8.1			19.9		30		40
	1200	3.0							6.5			15.9		24.2		32
	1000	2.5							5.4			13.3		20.2		27.2
	900	2.3							4.8			12.0		18.2		24.5
	750	1.9							4.0			10.0		15.1		20.4
450	Exact Reduction Ratio								451.41			426.01		431.03		
	1800	4.0							8.3			22.4		32		
	1500	3.3							6.9			18.6		27.1		
	1200	2.7							5.6			14.9		21.7		
	1000	2.2							4.6			12.5		18.1		
	900	2.0							4.2			11.2		16.3		
	750	1.7							3.5			9.4		13.6		
Dimension Tables		Horizontal							C-66			C-68		C-68		C-70
		Vertical							C-86			C-88		C-88		C-90
		Upright							C-100			C-102		C-102		-

THERMAL POWER RATING (kW)

Nominal Ratio	H.Speed Shaft Speed r/min	Number of Cooling Fans	Size of Reducer													
			9015	9025	9030	9035	9040	9050	9055	9060	9070	9075	9080	9085	9090	9095
Quadruple Reduction Horizontal Type 400 ▼ 450	1800	-							45			86		110		137
	1500	-							43			83		106		133
	1200	-							40			78		100		127
	1000	-							37			74		95		121
	900	-							36			71		92		117
	750	-							33			67		87		111
Quadruple Reduction Vertical Type 400 ▼ 450	1800	-							46			89		114		144
	1500	-							44			85		109		138
	1200	-							41			80		103		130
	1000	-							38			75		97		123
	900	-							36			72		94		119
	750	-							34			68		88		113
Quadruple Reduction Upright Type 400 ▼ 450	1800	-							45			86		110		
	1500	-							43			83		106		
	1200	-							40			78		100		
	1000	-							37			74		95		
	900	-							36			71		92		
	750	-							33			67		87		

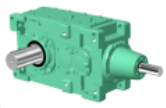

Size of Reducer										L.Speed Shaft Speed r/min	H.Speed Shaft Speed r/min	Nominal Reduction Ratio
9100	**9105**	**9110**	**9115**	**9118**	**9121**	**9126**	**9128**	**9131**	**9136**			
	380.94		417.44	407.84						Exact Reduction Ratio		**400**
	71		93	122						**4.5**	**1800**	
	59		78	102						**3.8**	**1500**	
	48		62	81						**3.0**	**1200**	
	40		52	68						**2.5**	**1000**	
	36		47	61						**2.3**	**900**	
	30		39	51						**1.9**	**750**	
										Exact Reduction Ratio		**450**
										4.0	**1800**	
										3.3	**1500**	
										2.7	**1200**	
										2.2	**1000**	
										2.0	**900**	
										1.7	**750**	
	C-70		C-70	C-72						Horizontal	Dimension Tables	
	C-90		C-90	-						Vertical		
	-		-	-						Upright		

Notes

1. Consult us when the high speed shaft speed is over 1800r/min.
2. When the high speed shaft speed is not shown in the table, find it by the interpolation method.
3. When the high speed shaft speed(N) is lower than 750r/min, find the mechanical power rating(P_N) according to the following formula.

$$P_N = P_{750} \times \frac{N}{750}$$

4. Shown in the table are the ratings for the slow speed shaft.
5. Refer to C42 - C49 for the allowable radial and axial load on each shaft.

Size of Reducer										Number of Cooling Fans	H.Speed Shaft Speed r/min	Nominal Ratio
9100	**9105**	**9110**	**9115**	**9118**	**9121**	**9126**	**9128**	**9131**	**9136**			
	179		225	246						-	**1800**	Quadruple Reduction Horizontal Type **400 ▼ 450**
	174		218	238						-	**1500**	
	166		208	226						-	**1200**	
	159		198	216						-	**1000**	
	155		193	210						-	**900**	
	147		183	198						-	**750**	
	188		234							-	**1800**	Quadruple Reduction Vertical Type **400 ▼ 450**
	181		225							-	**1500**	
	171		213							-	**1200**	
	163		202							-	**1000**	
	158		196							-	**900**	
	149		185							-	**750**	
										-	**1800**	Quadruple Reduction Upright Type **400 ▼ 450**
										-	**1500**	
										-	**1200**	
										-	**1000**	
										-	**900**	
										-	**750**	

Ambient Temperature °C	Temperature Correction Factor	
	Without Fan	With Fan
20	1.00	1.00
30	0.85	0.87
40	0.70	0.73
50	0.55	0.60

Notes

1. Shown in the table are the ratings for models without a fan cooling unit and those with a fan.
(-:none fan, 1:with a fan, 2:with two fans)
2. The values are applicable to continuous operation at ambient temperatures of 20 C or less. When the temperature in out of the range, refer to the temperature correction factor shown above.
3. When the high speed shaft speed is not shown in the table, find it by interpolation method.

Allowable Radial Load

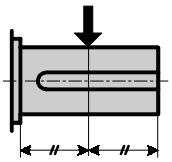

Sheet1

Aplicable to configurations : Double Redcution RR,LL/

	L.Speed Shaft Speed r/min	Size of Reducer															
		9015	9025	9030	9035	9045	9050	9055	9060	9070	9075	9080	9085	9090	9095	9100	9105
Standard bearing model	250	12.8	22.1	17.7	29.4	38.7	37.8	46.6	39.7	44.1	109.9	76.5	112.8	100.1	137.8	139.8	192.3
	160	14.7	24.0	20.1	31.4	41.2	39.7	48.1	41.7	46.1	110.4	85.8	113.3	108.9	145.7	157.5	200.6
	100	16.2	23.5	25.0	37.8	49.1	47.1	53.5	47.6	54.4	119.2	99.1	127.0	122.1	147.6	166.3	183.9
	63	16.2	23.1	29.9	42.2	58.4	55.9	62.3	58.9	65.2	146.7	125.6	156.0	125.6	143.7	165.3	178.1
	40	16.2	23.1	35.3	42.2	66.7	67.2	75.0	71.1	79.0	178.1	161.9	197.2	125.1	137.8	164.8	173.6
	<=25	15.7	23.1	42.2	41.2	80.4	79.0	90.3	86.8	99.1	218.8	208.0	236.9	122.6	135.4	163.3	167.3
Heavy duty bearing model	250								71.1	70.1	155.5	122.6	158.9	141.8	158.9	181.0	213.9
	160								78.0	77.5	158.9	137.3	162.4	132.4	151.6	174.6	200.6
	100								81.4	92.2	171.7	149.6	178.5	127.0	147.6	166.8	183.9
	63								81.4	114.8	206.5	149.1	214.8	125.6	143.7	165.8	178.1
	40								81.4	117.7	231.5	148.6	236.9	125.1	137.8	165.3	173.6
	<=25								81.4	117.7	231.5	147.2	236.9	122.6	135.4	163.8	167.3

Sheet2

Applicable to configurations : Double Reduction RL,LR/

	L.Speed Shaft Speed r/min	Size of Reducer															
		9015	9025	9030	9035	9045	9050	9055	9060	9070	9075	9080	9085	9090	9095	9100	9105
Standard bearing model	250	8.3	15.2	9.8	21.6	28.4	22.6	31.4	16.7	17.2	86.8	43.7	80.4	58.4	97.6	80.4	131.5
	160	9.8	18.6	12.3	23.1	29.4	24.0	31.4	18.1	17.7	85.3	52.5	79.5	64.3	103.0	96.1	138.3
	100	13.7	23.5	16.7	29.4	37.3	28.4	35.3	22.1	25.5	92.2	62.8	92.2	74.6	110.9	105.9	146.7
	63	16.7	28.4	21.6	36.3	47.1	37.3	42.7	33.4	33.8	117.2	89.3	118.2	104.5	148.1	153.5	200.1
	40	21.1	35.3	27.0	43.7	54.4	48.6	55.4	45.1	47.6	149.1	125.6	158.9	146.7	172.2	203.6	235.4
	<=25	24.5	36.3	34.3	50.5	68.7	61.8	70.1	60.8	67.7	171.9	171.2	211.4	171.2	171.2	215.3	304.1
Heavy duty bearing model	250								46.1	40.2	133.9	89.8	127.5	114.8	156.0	150.6	213.4
	160								52.0	45.6	135.4	103.5	128.0	125.1	164.8	170.7	223.2
	100								60.3	59.4	145.7	115.8	143.7	140.8	176.1	187.4	236.9
	63								81.4	80.0	171.9	152.5	176.6	174.1	186.9	218.8	301.7
	40								81.4	108.9	171.9	191.8	224.6	191.8	193.7	241.8	304.1
	<=25								81.4	117.7	171.9	180.5	230.3	171.2	171.2	214.8	304.1

Allowable Axial Load

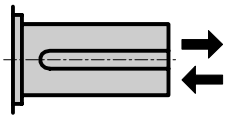

	L.Speed Shaft Speed r/min	Size of Reducer															
		9015	9025	9030	9035	9045	9050	9055	9060	9070	9075	9080	9085	9090	9095	9100	9105
Standard bearing model	250	9.3	11.4	14.7	23.1	35.3	32.9	31.9	27.0	28.0	45.6	23.5	42.7	31.4	52.0	45.1	50.0
	160	9.3	11.4	18.1	23.1	35.3	33.4	31.9	28.9	28.4	45.1	27.5	42.2	34.3	53.0	53.0	49.5
	100	9.3	11.4	24.5	23.1	35.3	37.3	31.9	34.3	39.7	48.6	32.9	48.6	43.2	59.4	58.4	54.0
	63	9.3	11.4	26.5	23.1	35.3	37.3	31.9	49.1	52.5	61.3	45.6	60.3	54.0	59.8	81.4	74.6
	40	9.3	11.4	26.5	23.1	35.3	37.3	31.9	49.1	61.4	62.8	63.3	60.3	59.8	59.8	83.4	83.4
	<=25	9.3	11.4	26.5	23.1	35.3	37.3	31.9	49.1	61.4	62.8	67.7	60.3	59.8	59.8	83.4	83.4
Heavy duty bearing model	250								23.1	18.6	93.2	56.9	86.8	59.8	59.8	83.4	83.4
	160								25.0	21.1	94.2	56.9	87.8	59.8	59.8	83.4	83.4
	100								29.4	27.5	101.5	56.9	97.6	59.8	59.8	83.4	83.4
	63								39.2	36.3	124.1	56.9	119.2	59.8	59.8	83.4	83.4
	40								39.2	49.1	149.1	56.9	149.6	59.8	59.8	83.4	83.4
	<=25								39.2	56.9	181.0	56.9	187.9	59.8	59.8	83.4	83.4

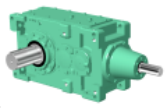

Triple Reduction RL,LR / Quadruple Reduction RR,LL

Size of Reducer								L.Speed Shaft Speed r/min	
9110	9115	9118	9121	9126	9128	9131	9136		
167.8	222.7							250	Standard bearing model
174.1	234.9							160	
184.9	245.7	391.9	352.7	330.6	315.4	403.2	391.9	100	
190.8	303.1	387.5	369.3	341.4	328.6	462.5	430.7	63	
194.7	320.8	460.1	449.3	401.2	409.6	572.4	511.1	40	
184.9	316.4	448.3	554.8	497.4	534.6	733.8	638.6	<=25	
250.6	316.9							250	Heavy duty bearing model
214.8	334.5							160	
195.2	340.9							100	
190.8	333.5							63	
194.7	320.8							40	
184.9	316.4							<=25	

Units : kN

Triple Redcution RR,LL / Quadruple Reduction RL,LR

Size of Reducer								L.Speed Shaft Speed r/min	
9110	9115	9118	9121	9126	9128	9131	9136		
94.2	152.5							250	Standard bearing model
92.2	155.0							160	
101.0	167.3	312.0	228.1	197.7	159.4	203.6	190.3	100	
144.7	220.7	292.3	244.3	206.0	170.7	260.9	218.8	63	
199.1	250.2	373.3	322.7	257.0	250.2	369.3	286.5	40	
272.7	353.2	460.1	427.2	348.7	373.3	528.3	398.3	<=25	
191.3	248.7							250	Heavy duty bearing model
197.7	261.4							160	
210.4	274.2							100	
267.8	341.9							63	
323.7	382.1							40	
323.7	374.7							<=25	

Units : kN

Size of Reducer								L.Speed Shaft Speed r/min	
9110	9115	9118	9121	9126	9128	9131	9136		
50.0	76.5							250	Standard bearing model
49.5	76.5							160	
54.0	83.4	119.7	121.6	116.7	91.2	113.3	107.9	100	
74.6	83.4	119.7	121.6	121.6	96.6	140.3	122.6	63	
83.4	83.4	119.7	121.6	121.6	134.9	191.3	155.5	40	
83.4	83.4	119.7	121.6	121.6	144.2	192.3	192.3	<=25	
83.4	83.4							250	Heavy duty bearing model
83.4	83.4							160	
83.4	83.4							100	
83.4	83.4							63	
83.4	83.4							40	
83.4	83.4							<=25	

Units : kN

Overhang Factor

Overhang Member	Overhang Factor
Sprocket (Single Row)	1
Sprocket (Double Row)	1.25
Gears	1.25
V belt	1.5
Flat Belt	2.5

Notes

1. The value shown in the table is allowable radial load when it is applied to the center of the solid shaft (except hollow shaft). Consult us when a load is not in the center.
2. Consult us for the blanks in the table.
3. Consult us when the radial load is applied upward.
4. In case of double projection shaft (RB, LB, BB)
   (1) See sheet (1) when the radial load is applied only to the shaft 1.
   (2) See sheet (2) when the radial load is applied only to the shaft 2.
   (3) Consult us when the radial load is applied to both shafts.

	RB	LB
Double Reduciton Ratio	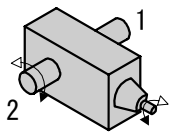	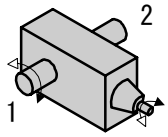
Triple Reduciton Ratio	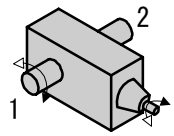	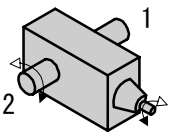
Quadruple Reduciton Ratio	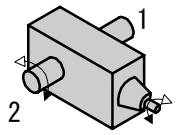	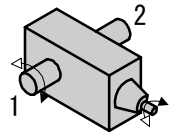

Allowable Radial Load

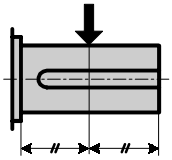

Sheet1

Aplicable to configurations : Double Redcution RR,LL/

	L.Speed Shaft Speed r/min	Size of Reducer															
		9015	9025	9030	9035	9045	9050	9055	9060	9070	9075	9080	9085	9090	9095	9100	9105
Standard bearing model	250	1300	2250	1800	3000	3950	3850	4750	4050	4500	11200	7800	11500	10200	14050	14250	19600
	160	1500	2450	2050	3200	4200	4050	4900	4250	4700	11250	8750	11550	11100	14850	16050	20450
	100	1650	2400	2550	3850	5000	4800	5450	4850	5550	12150	10100	12950	12450	15050	16950	18750
	63	1650	2350	3050	4300	5950	5700	6350	6000	6650	14950	12800	15900	12800	14650	16850	18150
	40	1650	2350	3600	4300	6800	6850	7650	7250	8050	18150	16500	20100	12750	14050	16800	17700
	<=25	1600	2350	4300	4200	8200	8050	9200	8850	10100	22300	21200	24150	12500	13800	16650	17050
Heavy duty bearing model	250								7250	7150	15850	12500	16200	14450	16200	18450	21800
	160								7950	7900	16200	14000	16550	13500	15450	17800	20450
	100								8300	9400	17500	15250	18200	12950	15050	17000	18750
	63								8300	11700	21050	15200	21900	12800	14650	16900	18150
	40								8300	12000	23600	15150	24150	12750	14050	16850	17700
	<=25								8300	12000	23600	15000	24150	12500	13800	16700	17050

Sheet2

Applicable to configurations : Double Reduction RL,LR/

	L.Speed Shaft Speed r/min	Size of Reducer															
		9015	9025	9030	9035	9045	9050	9055	9060	9070	9075	9080	9085	9090	9095	9100	9105
Standard bearing model	250	850	1550	1000	2200	2900	2300	3200	1700	1750	8850	4450	8200	5950	9950	8200	13400
	160	1000	1900	1250	2350	3000	2450	3200	1850	1800	8700	5350	8100	6550	10500	9800	14100
	100	1400	2400	1700	3000	3800	2900	3600	2250	2600	9400	6400	9400	7600	11300	10800	14950
	63	1700	2900	2200	3700	4800	3800	4350	3400	3450	11950	9100	12050	10650	15100	15650	20400
	40	2150	3600	2750	4450	5550	4950	5650	4600	4850	15200	12800	16200	14950	17550	20750	24000
	<=25	2500	3700	3500	5150	7000	6300	7150	6200	6900	17520	17450	21550	17450	17450	21950	31000
Heavy duty bearing model	250								4700	4100	13650	9150	13000	11700	15900	15350	21750
	160								5300	4650	13800	10550	13050	12750	16800	17400	22750
	100								6150	6050	14850	11800	14650	14350	17950	19100	24150
	63								8300	8150	17520	15550	18000	17750	19050	22300	30750
	40								8300	11100	17520	19550	22900	19550	19750	24650	31000
	<=25								8300	12000	17520	18400	23480	17450	17450	21900	31000

Allowable Axial Load

	L.Speed Shaft Speed r/min	Size of Reducer															
		9015	9025	9030	9035	9045	9050	9055	9060	9070	9075	9080	9085	9090	9095	9100	9105
Standard bearing model	250	950	1160	1500	2350	3600	3350	3250	2750	2850	4650	2400	4350	3200	5300	4600	5100
	160	950	1160	1850	2350	3600	3400	3250	2950	2900	4600	2800	4300	3500	5400	5400	5050
	100	950	1160	2500	2350	3600	3800	3250	3500	4050	4950	3350	4950	4400	6050	5950	5500
	63	950	1160	2700	2350	3600	3800	3250	5000	5350	6250	4650	6150	5500	6100	8300	7600
	40	950	1160	2700	2350	3600	3800	3250	5000	6260	6400	6450	6150	6100	6100	8500	8500
	<=25	950	1160	2700	2350	3600	3800	3250	5000	6260	6400	6900	6150	6100	6100	8500	8500
Heavy duty bearing model	250								2350	1900	9500	5800	8850	6100	6100	8500	8500
	160								2550	2150	9600	5800	8950	6100	6100	8500	8500
	100								3000	2800	10350	5800	9950	6100	6100	8500	8500
	63								4000	3700	12650	5800	12150	6100	6100	8500	8500
	40								4000	5000	15200	5800	15250	6100	6100	8500	8500
	<=25								4000	5800	18450	5800	19150	6100	6100	8500	8500

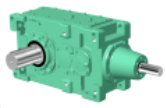

Triple Reduction RL,LR / Quadruple Reduction RR,LL

Size of Reducer								L.Speed Shaft Speed r/min	
9110	9115	9118	9121	9126	9128	9131	9136		
17100	22700							250	Standard bearing model
17750	23950							160	
18850	25050	39950	35950	33700	32150	41100	39950	100	
19450	30900	39500	37650	34800	33500	47150	43900	63	
19850	32700	46900	45800	40900	41750	58350	52100	40	
18850	32250	45700	56550	50700	54500	74800	65100	<=25	
25550	32300							250	Heavy duty bearing model
21900	34100							160	
19900	34750							100	
19450	34000							63	
19850	32700							40	
18850	32250							<=25	

Units : kgf

Triple Redcution RR,LL / Quadruple Reduction RL,LR

Size of Reducer								L.Speed Shaft Speed r/min	
9110	9115	9118	9121	9126	9128	9131	9136		
9600	15550							250	Standard bearing model
9400	15800							160	
10300	17050	31800	23250	20150	16250	20750	19400	100	
14750	22500	29800	24900	21000	17400	26600	22300	63	
20300	25500	38050	32900	26200	25500	37650	29200	40	
27800	36000	46900	43550	35550	38050	53850	40600	<=25	
19500	25350							250	Heavy duty bearing model
20150	26650							160	
21450	27950							100	
27300	34850							63	
33000	38950							40	
33000	38200							<=25	

Units :kgf

Size of Reducer								L.Speed Shaft Speed r/min	
9110	9115	9118	9121	9126	9128	9131	9136		
5100	7800							250	Standard bearing model
5050	7800							160	
5500	8500	12200	12400	11900	9300	11550	11000	100	
7600	8500	12200	12400	12400	9850	14300	12500	63	
8500	8500	12200	12400	12400	13750	19500	15850	40	
8500	8500	12200	12400	12400	14700	19600	19600	<=25	
8500	8500							250	Heavy duty bearing model
8500	8500							160	
8500	8500							100	
8500	8500							63	
8500	8500							40	
8500	8500							<=25	

Units : kgf

Overhang Factor

Overhang Member	Overhang Factor
Sprocket (Single Row)	1
Sprocket (Double Row)	1.25
Gears	1.25
V belt	1.5
Flat Belt	2.5

Notes

1. The value shown in the table is allowable radial load when it is applied to the center of the solid shaft (except hollow shaft). Consult us when a load is not in the center.
2. Consult us for the blanks in the table.
3. Consult us when the radial load is applied upward.
4. In case of double projection shaft (RB, LB, BB)
   (1) See sheet (1) when the radial load is applied only to the shaft 1.
   (2) See sheet (2) when the radial load is applied only to the shaft 2.
   (3) Consult us when the radial load is applied to both shafts.

	RB	LB
Double Reduciton Ratio	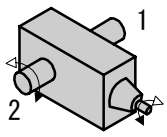	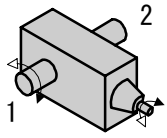
Triple Reduciton Ratio	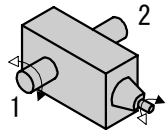	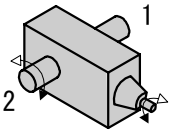
Quadruple Reduciton Ratio	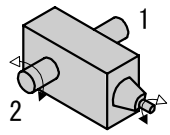	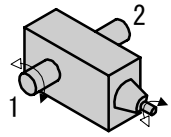

Double Reduction

Nominal Reduction Ratio	H.Speed Shaft Speed r/min	Size of Reducer															
		9015	9025	9030	9035	9045	9050	9055	9060	9070	9075	9080	9085	9090	9095	9100	9105
6.3 ▼ 8	1800	5.4	6.4	7.4	7.4	11.8	10.3	10.3	9.8	11.8	11.8	9.3	9.3				
	1500	5.9	6.9	8.3	8.3	13.2	11.8	11.8	11.8	14.2	14.2	9.8	9.8				
	1200	5.9	7.8	9.3	9.3	14.7	14.2	14.2	14.7	18.1	18.1	14.2	14.2				
	1000	5.9	8.3	10.3	10.3	16.2	15.2	15.2	16.7	21.1	21.1	19.1	19.1				
	900	5.9	8.8	10.3	10.3	16.7	16.2	16.2	17.7	22.1	22.1	21.6	21.6				
	750	5.9	8.8	11.3	11.3	17.7	17.2	17.2	18.6	23.5	23.5	23.5	23.5				
9 ▼ 10	1800	6.4	7.4	9.3	9.3	14.2	12.8	12.8	14.7	15.2	15.2	11.3	11.3		28.4		—
	1500	6.4	7.8	10.3	10.3	15.7	14.2	14.2	16.7	18.1	18.1	13.7	13.7		30.4		—
	1200	6.4	8.8	11.3	11.3	17.7	16.2	16.2	19.6	21.6	21.6	19.6	19.6		33.8		—
	1000	6.4	8.8	11.8	11.8	18.6	17.7	17.7	22.1	24.5	24.5	24.0	24.0		37.3		—
	900	6.4	8.8	11.8	11.8	19.1	18.1	18.1	23.1	25.5	25.5	26.0	26.0		39.2		—
	750	6.4	8.8	11.8	11.8	20.1	19.1	19.1	24.5	27.5	27.5	28.0	28.0		41.7		—
11.2 ▼ 22.4	1800	6.9	7.8	10.3	10.3	15.2	13.2	13.2	17.2	18.1	18.1	19.6	19.6		31.9		—
	1500	6.9	8.8	11.3	11.3	16.7	15.2	15.2	19.1	20.6	20.6	22.6	22.6		34.8		—
	1200	6.9	9.3	12.3	12.3	18.6	17.2	17.2	22.1	24.5	24.5	26.5	26.5		38.7		—
	1000	6.9	9.3	12.3	12.3	19.6	18.6	18.6	24.5	27.5	27.5	30.4	30.4		42.2		—
	900	6.9	9.3	12.3	12.3	20.1	19.1	19.1	25.0	28.4	28.4	32.4	32.4		44.1		—
	750	6.9	9.3	12.3	12.3	21.1	20.1	20.1	26.5	30.4	30.4	34.3	34.3		46.6		—

Triple Reduction

Nominal Reduction Ratio	H.Speed Shaft Speed r/min	Size of Reducer															
		9015	9025	9030	9035	9045	9050	9055	9060	9070	9075	9080	9085	9090	9095	9100	9105
20 ▼ 25	1800			6.4	6.4	8.8	10.8	10.8	14.7	13.7	13.7	14.2	14.2	10.3	10.3	11.3	11.3
	1500			6.4	6.4	8.8	11.8	11.8	16.2	15.2	15.2	16.7	16.7	14.2	14.2	15.7	15.7
	1200			6.4	6.4	8.8	12.8	12.8	18.1	17.7	17.7	19.1	19.1	18.1	18.1	21.1	21.1
	1000			6.4	6.4	8.8	12.8	12.8	19.1	19.1	19.1	21.6	21.6	21.1	21.1	24.5	24.5
	900			6.4	6.4	8.8	12.8	12.8	20.1	19.6	19.6	22.1	22.1	21.6	21.6	26.0	26.0
	750			6.4	6.4	8.8	12.8	12.8	21.1	20.6	20.6	23.5	23.5	23.5	23.5	28.0	28.0
28 ▼ 50	1800			6.9	6.9	9.3	12.3	12.3	16.7	15.2	15.2	20.1	20.1	20.6	17.7	22.1	12.8
	1500			6.9	6.9	9.3	12.8	12.8	18.6	17.2	17.2	22.1	22.1	23.1	19.1	25.0	16.2
	1200			6.9	6.9	9.3	13.2	13.2	20.1	19.1	19.1	25.0	25.0	26.5	21.6	28.9	21.1
	1000			6.9	6.9	9.3	13.2	13.2	21.6	20.6	20.6	27.5	27.5	29.4	24.0	32.4	25.0
	900			6.9	6.9	9.3	13.2	13.2	21.6	21.1	21.1	28.0	28.0	30.4	25.0	33.8	26.5
	750			6.9	6.9	9.3	13.2	13.2	21.6	22.1	22.1	29.4	29.4	31.9	26.5	35.8	28.4
56 ▼ 90	1800			6.9	6.9	9.3	13.7	13.7	19.1	19.6	19.6	24.5	24.5	27.0	27.0	28.9	28.9
	1500			6.9	6.9	9.3	13.7	13.7	20.6	21.6	21.6	27.0	27.0	29.4	29.4	32.4	31.9
	1200			6.9	6.9	9.3	13.7	13.7	22.1	24.0	24.0	29.9	29.9	32.9	32.9	36.3	36.3
	1000			6.9	6.9	9.3	13.7	13.7	22.1	25.0	25.0	31.9	31.9	35.8	35.8	39.7	39.7
	900			6.9	6.9	9.3	13.7	13.7	22.1	26.0	26.0	32.9	32.9	36.8	36.8	41.7	41.2
	750			6.9	6.9	9.3	13.7	13.7	22.1	27.0	27.0	34.3	34.3	38.7	38.7	43.7	43.7

Quadruple Reduction

Nominal Reduction Ratio	H.Speed Shaft Speed r/min	Size of Reducer															
		9015	9025	9030	9035	9045	9050	9055	9060	9070	9075	9080	9085	9090	9095	9100	9105
71 ▼ 450	1800					6.9	6.9	6.9	9.3	13.7	13.7	18.6	18.6	20.6	19.6	27.0	26.0
	1500					6.9	6.9	6.9	9.3	13.7	13.7	20.1	20.1	22.6	21.6	28.9	28.0
	1200					6.9	6.9	6.9	9.3	13.7	13.7	22.1	22.1	24.5	24.0	32.4	30.9
	1000					6.9	6.9	6.9	9.3	13.7	13.7	22.1	22.1	26.0	25.0	34.3	33.4
	900					6.9	6.9	6.9	9.3	13.7	13.7	22.1	22.1	26.5	26.0	35.3	33.8
	750					6.9	6.9	6.9	9.3	13.7	13.7	22.1	22.1	27.5	27.0	36.8	35.3

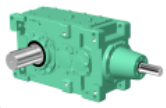

Size of Reducer								H.Speed Shaft Speed r/min	Nominal Reduction Ratio
9110	9115	9118	9121	9126	9128	9131	9136		
								1800	
								1500	6.3
								1200	▼
								1000	
								900	8
								750	
	—							1800	
	—							1500	9
	—							1200	▼
	—							1000	
	—							900	10
	—							750	
	—							1800	
	—							1500	11.2
	6.4							1200	▼
	12.8							1000	
	16.7							900	22.4
	24.0							750	

Units : kN

Size of Reducer								H.Speed Shaft Speed r/min	Nominal Reduction Ratio
9110	9115	9118	9121	9126	9128	9131	9136		
9.3	9.3	9.3	—	—	—	—	—	1800	
14.7	14.7	14.7	—	—	—	—	—	1500	20
22.1	22.1	22.1	—	—	—	—	—	1200	▼
27.5	27.5	27.5	—	—	—	—	—	1000	
29.9	29.9	29.9	—	—	—	—	—	900	25
32.4	32.4	32.4	—	—	—	—	—	750	
28.4	23.5	12.8	28.4	21.1	51.5	80.4	76.5	1800	
32.4	26.0	18.6	32.9	24.5	56.9	88.8	82.9	1500	28
37.3	29.4	26.5	38.3	29.4	64.7	99.6	91.7	1200	▼
41.7	32.4	31.9	42.7	34.8	71.1	108.9	99.1	1000	
44.1	33.8	34.3	45.6	37.8	75.0	114.8	103.5	900	50
46.6	35.3	37.3	49.1	41.2	80.0	125.1	111.8	750	
34.8	33.4	30.9	33.4	23.5	56.4	91.7	82.4	1800	
38.7	36.8	34.8	37.3	29.4	62.3	100.1	88.8	1500	56
43.7	42.2	39.7	42.7	35.8	70.1	111.3	100.1	1200	▼
48.1	46.6	44.1	47.6	40.2	76.5	121.2	109.4	1000	
50.5	49.1	47.1	50.0	43.2	80.4	126.5	115.3	900	90
53.0	52.0	49.5	54.0	47.1	83.9	137.3	126.1	750	

Units : kN

Size of Reducer								H.Speed Shaft Speed r/min	Nominal Reduction Ratio
9110	9115	9118	9121	9126	9128	9131	9136		
21.6	20.1	15.2	19.6	13.7	19.6	23.5	10.3	1800	
23.5	22.6	17.2	22.1	17.2	22.6	27.0	15.7	1500	71
26.5	25.5	20.1	25.5	21.1	27.0	31.9	23.1	1200	▼
28.9	27.5	22.6	28.4	24.0	30.4	36.3	28.0	1000	
29.4	28.4	23.1	29.4	24.5	31.9	38.7	30.4	900	450
30.9	29.9	24.5	30.9	26.5	33.8	41.7	32.9	750	

Units : kN

Overhang Factor

Overhang Member	Overhang Factor
Sprocket (Single Row)	1
Sprocket (Double Row)	1.25
Gears	1.25
V belt	1.5
Flat Belt	2.5

Notes

1. The value shown in the table is allowable radial load when it is applied to the center of the shaft.
2. Consult us when the radial load due to pulley driving, etc. is to be applied in the blanks in the table.

Double Reduction

Nominal Reduction Ratio	H.Speed Shaft Speed r/min	Size of Reducer															
		9015	9025	9030	9035	9045	9050	9055	9060	9070	9075	9080	9085	9090	9095	9100	9105
6.3 ▼ 8	1800	550	650	750	750	1200	1050	1050	1000	1200	1200	950	950				
	1500	600	700	850	850	1350	1200	1200	1200	1450	1450	1000	1000				
	1200	600	800	950	950	1500	1450	1450	1500	1850	1850	1450	1450				
	1000	600	850	1050	1050	1650	1550	1550	1700	2150	2150	1950	1950				
	900	600	900	1050	1050	1700	1650	1650	1800	2250	2250	2200	2200				
	750	600	900	1150	1150	1800	1750	1750	1900	2400	2400	2400	2400				
9 ▼ 10	1800	650	750	950	950	1450	1300	1300	1500	1550	1550	1150	1150		2900		—
	1500	650	800	1050	1050	1600	1450	1450	1700	1850	1850	1400	1400		3100		—
	1200	650	900	1150	1150	1800	1650	1650	2000	2200	2200	2000	2000		3450		—
	1000	650	900	1200	1200	1900	1800	1800	2250	2500	2500	2450	2450		3800		—
	900	650	900	1200	1200	1950	1850	1850	2350	2600	2600	2650	2650		4000		—
	750	650	900	1200	1200	2050	1950	1950	2500	2800	2800	2850	2850		4250		—
11.2 ▼ 22.4	1800	700	800	1050	1050	1550	1350	1350	1750	1850	1850	2000	2000		3250		—
	1500	700	900	1150	1150	1700	1550	1550	1950	2100	2100	2300	2300		3550		—
	1200	700	950	1250	1250	1900	1750	1750	2250	2500	2500	2700	2700		3950		—
	1000	700	950	1250	1250	2000	1900	1900	2500	2800	2800	3100	3100		4300		—
	900	700	950	1250	1250	2050	1950	1950	2550	2900	2900	3300	3300		4500		—
	750	700	950	1250	1250	2150	2050	2050	2700	3100	3100	3500	3500		4750		—

Triple Reduction

Nominal Reduction Ratio	H.Speed Shaft Speed r/min	Size of Reducer															
		9015	9025	9030	9035	9045	9050	9055	9060	9070	9075	9080	9085	9090	9095	9100	9105
20 ▼ 25	1800			650	650	900	1100	1100	1500	1400	1400	1450	1450	1050	1050	1150	1150
	1500			650	650	900	1200	1200	1650	1550	1550	1700	1700	1450	1450	1600	1600
	1200			650	650	900	1300	1300	1850	1800	1800	1950	1950	1850	1850	2150	2150
	1000			650	650	900	1300	1300	1950	1950	1950	2200	2200	2150	2150	2500	2500
	900			650	650	900	1300	1300	2050	2000	2000	2250	2250	2200	2200	2650	2650
	750			650	650	900	1300	1300	2150	2100	2100	2400	2400	2400	2400	2850	2850
28 ▼ 50	1800			700	700	950	1250	1250	1700	1550	1550	2050	2050	2100	1800	2250	1300
	1500			700	700	950	1300	1300	1900	1750	1750	2250	2250	2350	1950	2550	1650
	1200			700	700	950	1350	1350	2050	1950	1950	2550	2550	2700	2200	2950	2150
	1000			700	700	950	1350	1350	2200	2100	2100	2800	2800	3000	2450	3300	2550
	900			700	700	950	1350	1350	2200	2150	2150	2850	2850	3100	2550	3450	2700
	750			700	700	950	1350	1350	2200	2250	2250	3000	3000	3250	2700	3650	2900
56 ▼ 90	1800			700	700	950	1400	1400	1950	2000	2000	2500	2500	2750	2750	2950	2950
	1500			700	700	950	1400	1400	2100	2200	2200	2750	2750	3000	3000	3300	3250
	1200			700	700	950	1400	1400	2250	2450	2450	3050	3050	3350	3350	3700	3700
	1000			700	700	950	1400	1400	2250	2550	2550	3250	3250	3650	3650	4050	4050
	900			700	700	950	1400	1400	2250	2650	2650	3350	3350	3750	3750	4250	4200
	750			700	700	950	1400	1400	2250	2750	2750	3500	3500	3950	3950	4450	4450

Quadruple Reduction

Nominal Reduction Ratio	H.Speed Shaft Speed r/min	Size of Reducer															
		9015	9025	9030	9035	9045	9050	9055	9060	9070	9075	9080	9085	9090	9095	9100	9105
71 ▼ 450	1800					700	700	700	950	1400	1400	1900	1900	2100	2000	2750	2650
	1500					700	700	700	950	1400	1400	2050	2050	2300	2200	2950	2850
	1200					700	700	700	950	1400	1400	2250	2250	2500	2450	3300	3150
	1000					700	700	700	950	1400	1400	2250	2250	2650	2550	3500	3400
	900					700	700	700	950	1400	1400	2250	2250	2700	2650	3600	3450
	750					700	700	700	950	1400	1400	2250	2250	2800	2750	3750	3600

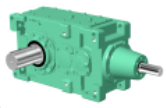

Size of Reducer								H.Speed Shaft Speed r/min	Nominal Reduction Ratio
9110	9115	9118	9121	9126	9128	9131	9136		
								1800	6.3 ▼ 8
								1500	
								1200	
								1000	
								900	
								750	
	—							1800	9 ▼ 10
	—							1500	
	—							1200	
	—							1000	
	—							900	
	—							750	
	—							1800	11.2 ▼ 22.4
	—							1500	
	650							1200	
	1300							1000	
	1700							900	
	2450							750	

Units : kgf

Size of Reducer								H.Speed Shaft Speed r/min	Nominal Reduction Ratio
9110	9115	9118	9121	9126	9128	9131	9136		
950	950	950	—	—	—	—	—	1800	20 ▼ 25
1500	1500	1500	—	—	—	—	—	1500	
2250	2250	2250	—	—	—	—	—	1200	
2800	2800	2800	—	—	—	—	—	1000	
3050	3050	3050	—	—	—	—	—	900	
3300	3300	3300	—	—	—	—	—	750	
2900	2400	1300	2900	2150	5250	8200	7800	1800	28 ▼ 50
3300	2650	1900	3350	2500	5800	9050	8450	1500	
3800	3000	2700	3900	3000	6600	10150	9350	1200	
4250	3300	3250	4350	3550	7250	11100	10100	1000	
4500	3450	3500	4650	3850	7650	11700	10550	900	
4750	3600	3800	5000	4200	8150	12750	11400	750	
3550	3400	3150	3400	2400	5750	9350	8400	1800	56 ▼ 90
3950	3750	3550	3800	3000	6350	10200	9050	1500	
4450	4300	4050	4350	3650	7150	11350	10200	1200	
4900	4750	4500	4850	4100	7800	12350	11150	1000	
5150	5000	4800	5100	4400	8200	12900	11750	900	
5400	5300	5050	5500	4800	8550	14000	12850	750	

Units : kgf

Size of Reducer								H.Speed Shaft Speed r/min	Nominal Reduction Ratio
9110	9115	9118	9121	9126	9128	9131	9136		
2200	2050	1550	2000	1400	2000	2400	1050	1800	71 ▼ 450
2400	2300	1750	2250	1750	2300	2750	1600	1500	
2700	2600	2050	2600	2150	2750	3250	2350	1200	
2950	2800	2300	2900	2450	3100	3700	2850	1000	
3000	2900	2350	3000	2500	3250	3950	3100	900	
3150	3050	2500	3150	2700	3450	4250	3350	750	

Units : kgf

Overhang Factor

Overhang Member	Overhang Factor
Sprocket (Single Row)	1
Sprocket (Double Row)	1.25
Gears	1.25
V belt	1.5
Flat Belt	2.5

Notes

1. The value shown in the table is allowable radial load when it is applied to the center of the shaft.
2. Consult us when the radial load due to pulley driving, etc. is to be applied in the blanks in the table.

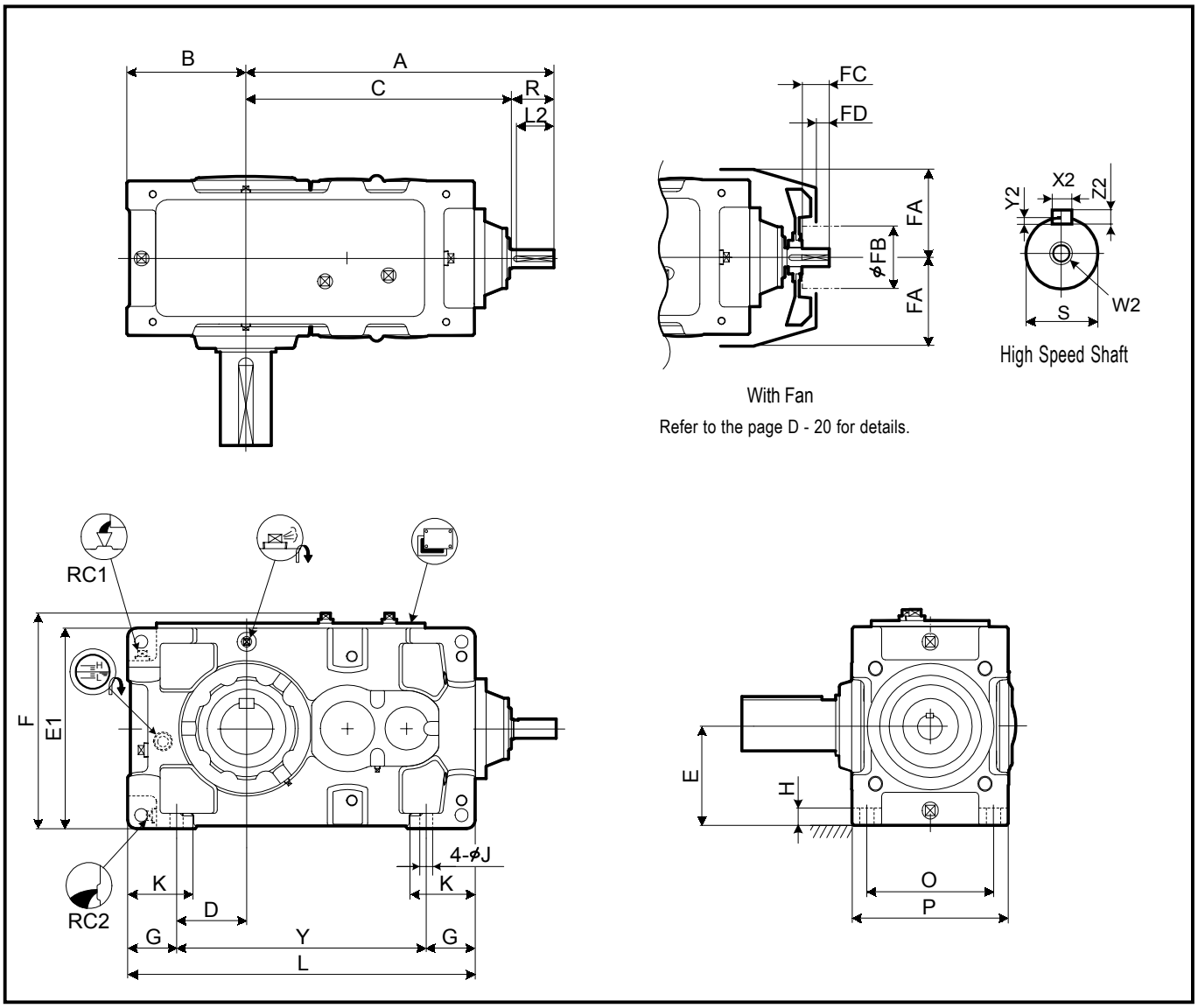

Size	A	B	C	D	E	E1	F	G	H	J	K	L	O	P	Y
9015	507	160	427	90	135	270	299	70	22	15	95	440	170	205	300
9025	545	175	465	95	155	310	339	80	25	19	110	505	195	235	345
9030	645	200	535	110	160	320	349	90	28	24	120	590	215	265	410
9035	676	219	566	129	185	370	399	90	28	24	120	640	215	265	460
9040	705	235	595	120	200	400	431	115	30	28	150	685	255	315	455
9050	755	255	645	138.5	210	420	451	116.5	32	28	150	775	285	345	542
9055	794	286	684	171	245	490	521	115	32	28	150	845	285	345	615

Size	High Speed Shaft							Fan				RC1	RC2	Wt.	Oil Qty.
	R	S	W2/Depth	Key				FA	FB	FC	FD				
				X2	Y2	Z2	L2							kg	L
9015	80	28k6	M12/28	8	4	7	70	125	125	50	30	3/4"	3/4"	95	5
9025	80	35k6	M12/28	10	5	8	70	135	140	50	30	3/4"	3/4"	140	7
9030	110	40k6	M16/36	14	5.5	9	95	150	140	80	52	3/4"	3/4"	205	10
9035	110	40k6	M16/36	14	5.5	9	95	150	140	80	52	3/4"	3/4"	225	12
9040	110	45k6	M16/36	14	5.5	9	95	170	160	80	52	1"	1"	305	16
9050	110	50k6	M16/36	14	5.5	9	95	190	160	80	52	1"	1"	435	21
9055	110	50k6	M16/36	14	5.5	9	95	190	160	80	52	1"	1"	495	28

Units:mm

1.Key and keyways are based on ISO R773-1969 Close keys(JIS B1301-1996 Parallel key in fastening type)
2.The oil quantity is approximate.Oil shall be supplied within the range shown on the oil gauge.
3. Refer to the page D - 12 for dimensions not shown in these drawings.
4. Refer to the page D - 24 for the dimension of optional parts.

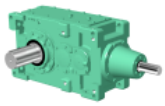

Slow Speed Shaft

Solid Shaft	Hollow Shaft (Shrink Disk Type)	Hollow Shaft (KeyType)
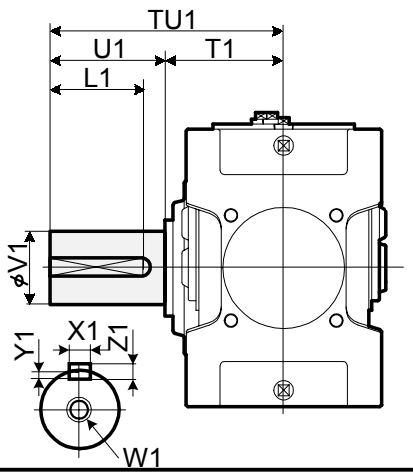	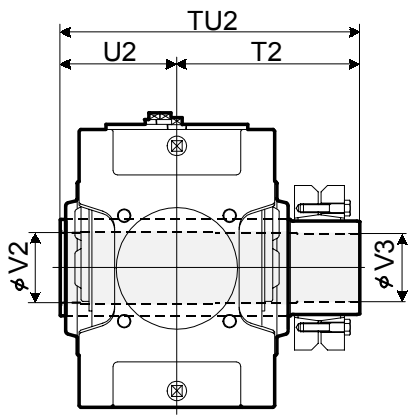 Refer to the page D-18 for details.	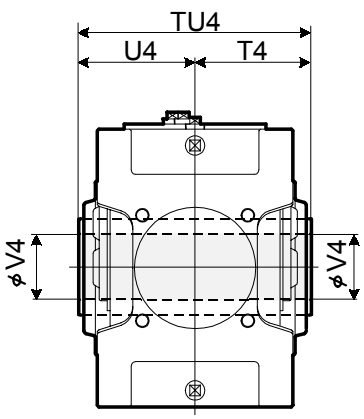 Refer to the page D -19 for details.

Size	Solid Shaft									Hollow Shaft (Shrink Disk Type)					Hollow Shaft (Key Type)			
	TU1	T1	U1	V1	W1/Depth	Key				TU2	T2	U2	V2	V3	TU4	T4	U4	V4
						X1	Y1	Z1	L1									
9015	245	135	110	58m6	M20/42	18	7	11	95	328	193	135	63	60	270	135	135	55
9025	285	145	140	70m6	M20/42	20	7.5	12	125	358	213	145	73	70	300	150	150	65
9030	330	160	170	80m6	M20/42	22	9	14	150	393	233	160	83	80	330	165	165	75
9035	330	160	170	90m6	M20/42	25	9	14	150	403	243	160	88	85	330	165	165	85
9040	349	179	170	95m6	M24/50	25	9	14	150	448	268	180	98	95	360	180	180	90
9050	411	201	210	110m6	M24/50	28	10	16	190	503	303	200	108	105	410	205	205	105
9055	411	201	210	120m6	M24/50	32	11	18	185	528	323	205	123	120	410	205	205	115

Units:mm

Standard Shaft Arrangement Configuration

RL	RR	RB	LR	LL	LB
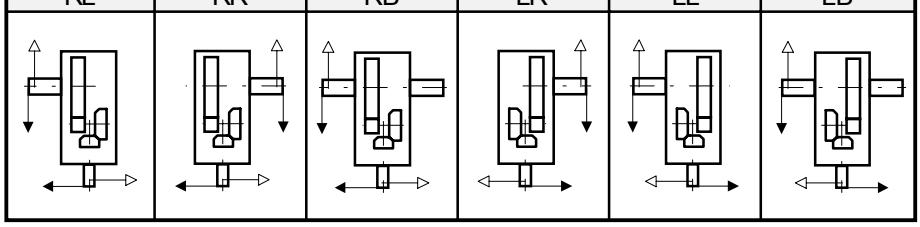					

Nomenclature

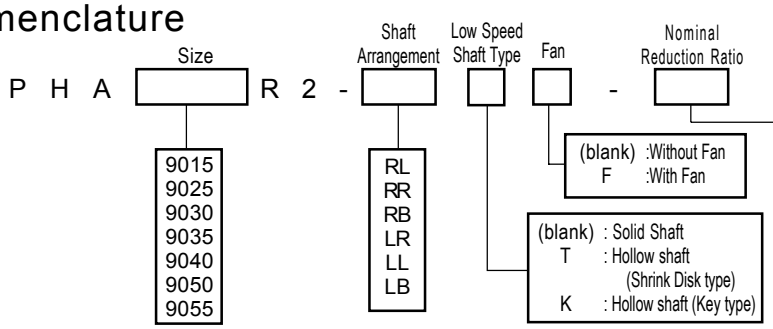

Size	Nominal Reduction Ratio											
	6.3	7.1	8	9	10	11.2	12.5	14	16	18	20	22.4
9015	O	O	O	O	O	O	O	O	O	O		
9025	O	O	O	O	O	O	O	O	O	O		
9030	O	O	O	O	O	O	O	O	O	O		
9035			O	O	O	O	O	O	O	O	O	O
9040	O	O	O	O	O	O	O	O	O	O		
9050	O	O	O	O	O	O	O	O	O	O		
9055				O	O	O	O	O	O	O	O	O

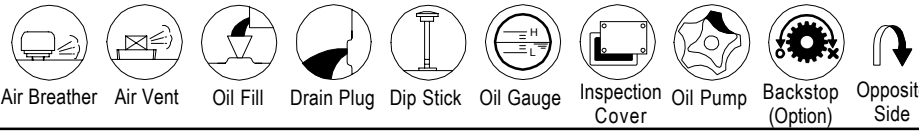

Air Breather Air Vent Oil Fill Drain Plug Dip Stick Oil Gauge Inspection Cover Oil Pump Backstop (Option) Opposite Side

Sumitomo Heavy Industries, Ltd.
http://www.shi.co.jp/ptc

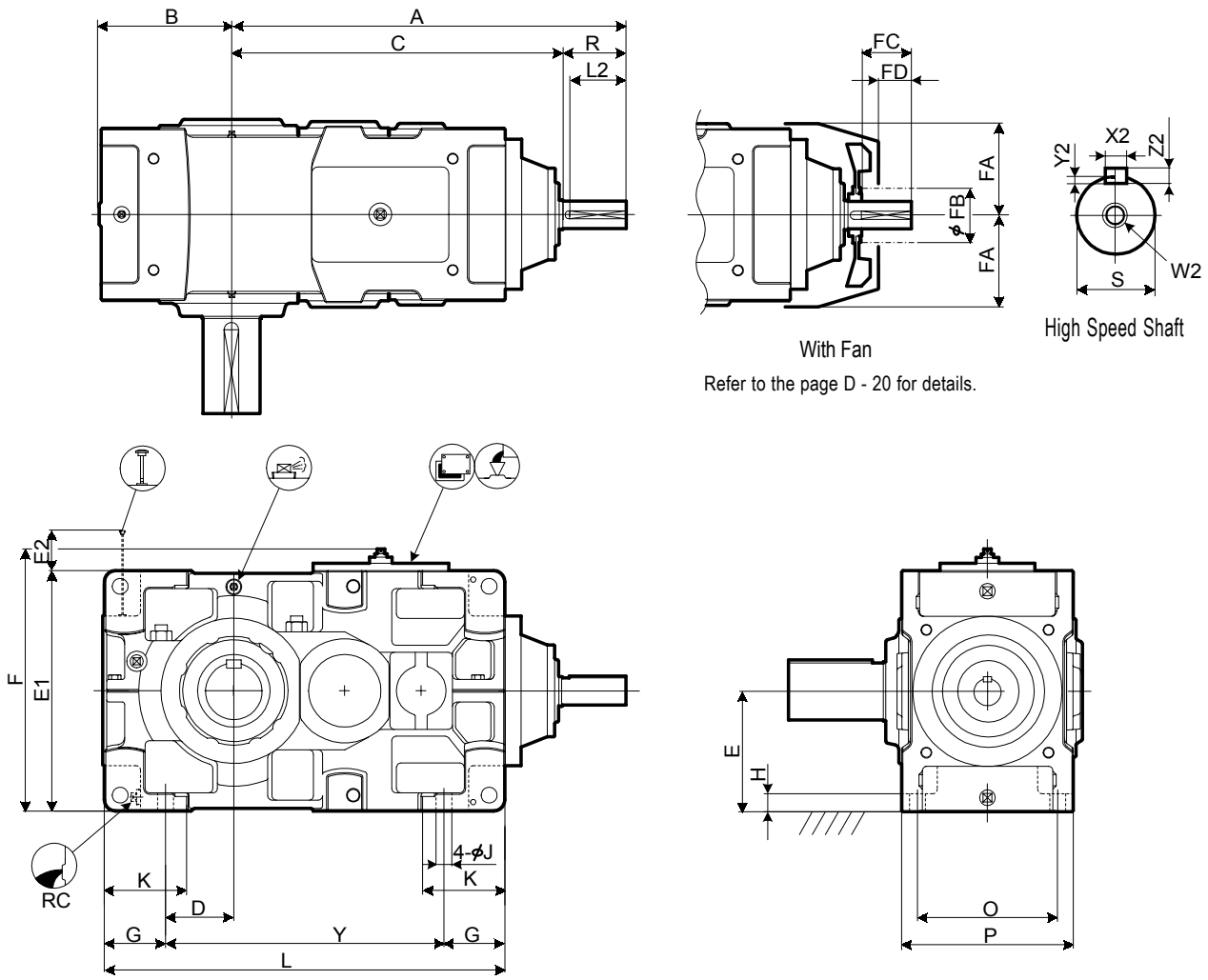

Size	A	B	C	D	E	E1	E2	F	G	H	J	K	L	O	P	Y
9060	865	291	725	151	265	530	183	578	135	35	35	180	885	310	380	615
9070	965	328	825	163	300	600	213	648	160	40	42	215	1020	350	430	700
9075	1018	375	878	210	335	670	178	718	160	52	42	220	1120	350	430	800
9080	1080	370	940	205	335	670	236	718	160	52	42	220	1155	380	460	835
9085	1136	414	996	249	375	750	196	798	160	52	42	220	1255	380	460	935

Size	High Speed Shaft							Fan				RC	Wt.	Oil Qty.
	R	S	W2/Depth	Key				FA	FB	FC	FD			
				X2	Y2	Z2	L2						kg	L
9060	140	60m6	M20/42	18	7	11	125	220	160	105	65	1"	600	25
9070	140	65m6	M20/42	18	7	11	125	245	200	105	65	1"	920	37
9075	140	65m6	M20/42	18	7	11	125	245	200	105	65	1"	1170	46
9080	140	75m6	M20/42	20	7.5	12	125	270	225	105	60	1"	1300	53
9085	140	75m6	M20/42	20	7.5	12	125	270	225	105	60	1"	1560	67

Units:mm

1.Key and keyways are based on ISO R773-1969 Close keys(JIS B1301-1996 Parallel key in fastening type)
2.The oil quantity is approximate.Oil shall be supplied within the range shown on the oil gauge.
3. Refer to the page D - 14 for dimensions not shown in these drawings.
4. Refer to the page D - 27 for the dimension of optional parts.

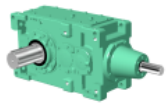

Slow Speed Shaft

Solid Shaft	Hollow Shaft (Shrink Disk Type)	Hollow Shaft (KeyType)
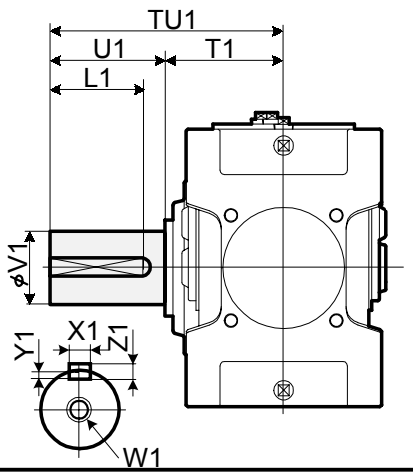	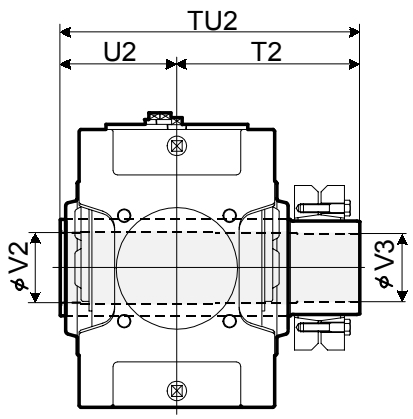 Refer to the page D-18 for details.	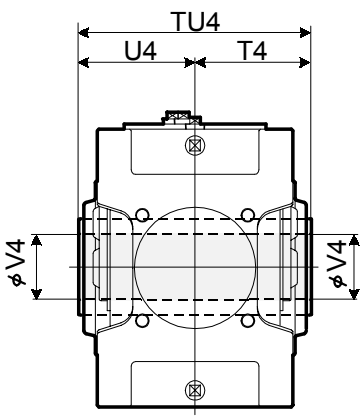 Refer to the page D -19 for details.

Size	Solid Shaft									Hollow Shaft (Shrink Disk Type)					Hollow Shaft (Key Type)			
	TU1	T1	U1	V1	W1/Depth	Key				TU2	T2	U2	V2	V3	TU4	T4	U4	V4
						X1	Y1	Z1	L1									
9060	440	230	210	125m6	M24/50	32	11	18	185	583	353	230	128	125	470	235	235	125
9070	509	259	250	145m6	M30/60	36	12	20	225	644	384	260	148	145	530	265	265	145
9075	562	262	300	160m6	M30/60	40	13	22	275	651	386	265	158	155	530	265	265	150
9080	582	282	300	165m6	M30/60	40	13	22	275	714	429	285	173	170	570	285	285	165
9085	585	285	300	175m6	M30/60	45	15	25	270	714	429	285	183	180	570	285	285	175

Units:mm

Standard Shaft Arrangement Configuration

RL	RR	RB	LR	LL	LB
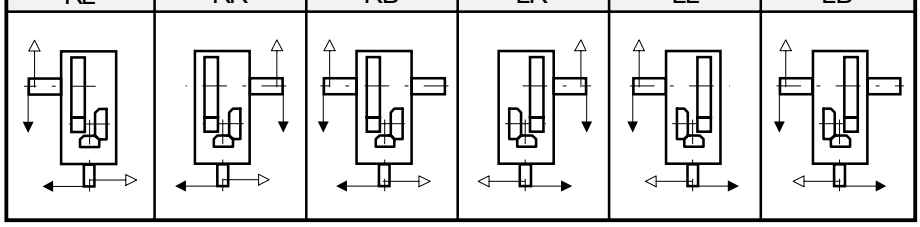					

Nomenclature

P H D [ ] R 2 - [ ] [ ] [ ] - [ ]

Size: 9060, 9070, 9075, 9080, 9085

Shaft Arrangement: RL, RR, RB, LR, LL, LB

Low Speed Shaft Type:
- (blank) : Solid Shaft
- T : Hollow shaft (Shrink Disk type)
- K : Hollow shaft (Key type)

Fan:
- (blank) :Without Fan
- F :With Fan

Nominal Reduction Ratio

Size	Nominal Reduction Ratio											
	6.3	7.1	8	9	10	11.2	12.5	14	16	18	20	22.4
9060	O	O	O	O	O	O	O	O	O	O		
9070	O	O	O	O	O	O	O	O	O	O		
9075				O	O	O	O	O	O	O	O	O
9080	O	O	O	O	O	O	O	O	O	O		
9085					O	O	O	O	O	O	O	O

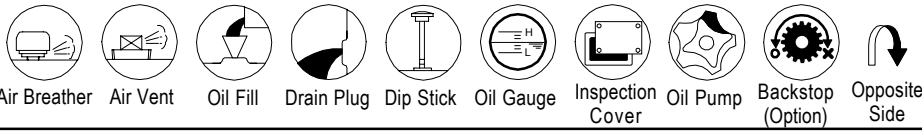

Air Breather | Air Vent | Oil Fill | Drain Plug | Dip Stick | Oil Gauge | Inspection Cover | Oil Pump | Backstop (Option) | Opposite Side

Sumitomo Heavy Industries, Ltd.
http://www.shi.co.jp/ptc

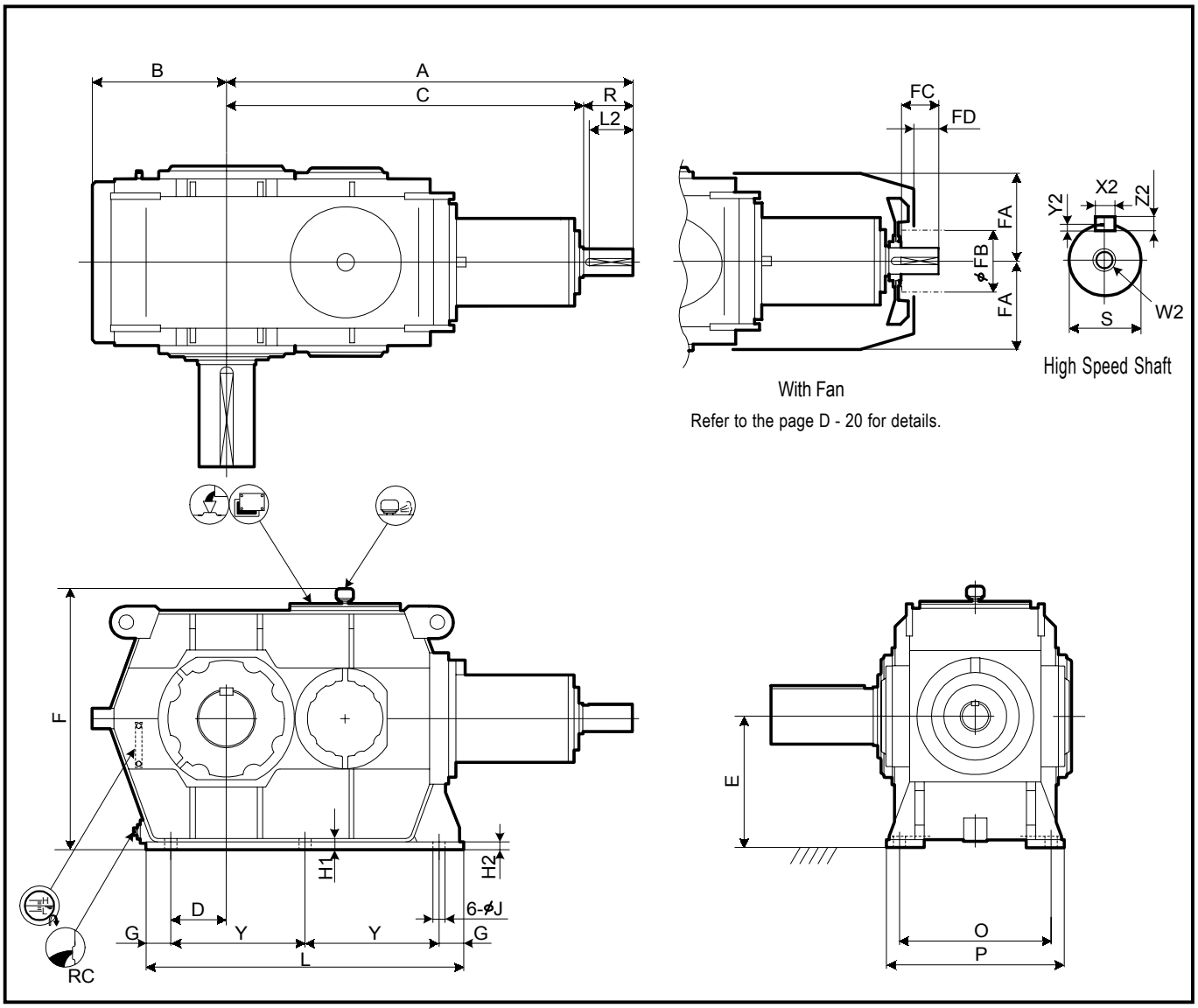

Size	A	B	C	D	E	F	G	H1	H2	J	L	O	P	Y
9095	1393	460	1223	190	450	895	85	39	27	42	1090	520	610	460
9105	1589	500	1379	210	500	995	90	39	27	42	1220	570	660	520
9115	1802	560	1592	240	560	1120	100	46	34	48	1390	630	730	595

Size	High Speed Shaft							Fan				RC1	Wt.	Oil Qty.
	R	S	W2/Depth	Key				FA	FB	FC	FD		kg	L
				X2	Y2	Z2	L2							
9095	170	90m6	M24/50	25	9	14	150	340	250	135	90	1 1/2"	2050	100
9105	210	100m6	M24/50	28	10	16	190	380	250	175	130	1 1/2"	2800	150
9115	210	110m6	M24/50	28	10	16	190	410	250	175	130	1 1/2"	3800	200

Units:mm

1.Key and keyways are based on ISO R773-1969 Close keys(JIS B1301-1996 Parallel key in fastening type)
2.The oil quantity is approximate.Oil shall be supplied within the range shown on the oil gauge.
3. Consult us for the dimensions not shown in these drawings.
4. Refer to the page D -30 for the dimension of optional parts.

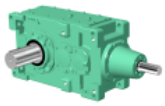

Slow Speed Shaft

Solid Shaft	Hollow Shaft (Shrink Disk Type)
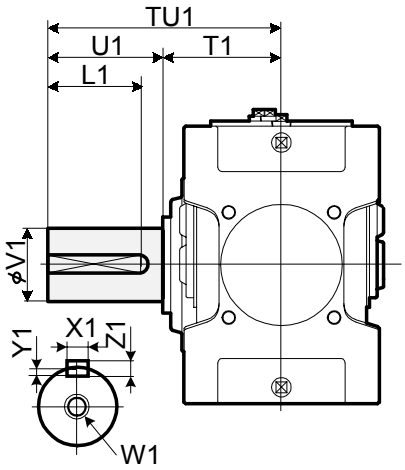	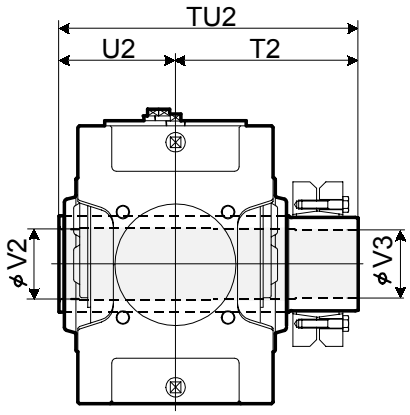 Refer to the page D - 18 for details.

Size	Solid Shaft									Hollow Shaft (Shrink Disk Type)				
	TU1	T1	U1	V1	W1/Depth	Key				TU2	T2	U2	V2	V3
						X1	Y1	Z1	L1					
9095	700	350	350	190m6	M30/60	45	15	25	320	859	509	350	203	200
9105	740	390	350	220m6	M30/60	50	17	28	320	949	559	390	223	220
9115	830	420	410	240m6	M30/60	56	20	32	375	1065	645	420	253	250

Units:mm

Standard Shaft Arrangement Configuration

RL	RR	RB	LR	LL	LB
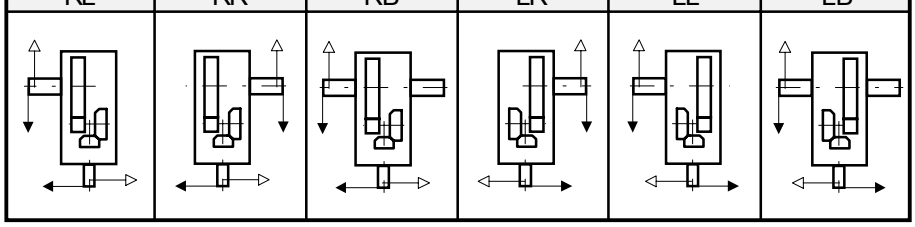					

Nomenclature

P H D [ ] R 2 A - [ ] [ ] [ ] - [ ]

Size: 9095, 9105, 9115

Shaft Arrangement: RL, RR, RB, LR, LL, LB

Low Speed Shaft Type: (blank) : Solid Shaft; T : Hollow shaft (Shrink Disk type)

Fan: (blank) :Without Fan; F :With Fan

Nominal Reduction Ratio

Size	Nominal Reduction Ratio										
	6.3	7.1	8	9	10	11.2	12.5	14	16	18	20
9090											
9095				O	O	O	O	O	O	O	O
9100											
9105				O	O	O	O	O	O	O	O
9110											
9115				O	O	O	O	O	O	O	O

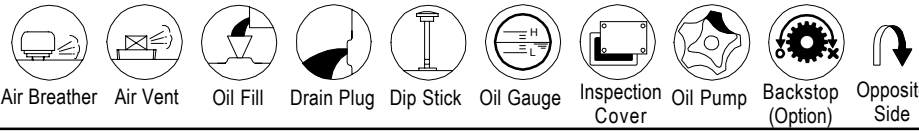

Air Breather | Air Vent | Oil Fill | Drain Plug | Dip Stick | Oil Gauge | Inspection Cover | Oil Pump | Backstop (Option) | Opposite Side

Sumitomo Heavy Industries, Ltd.
http://www.shi.co.jp/ptc

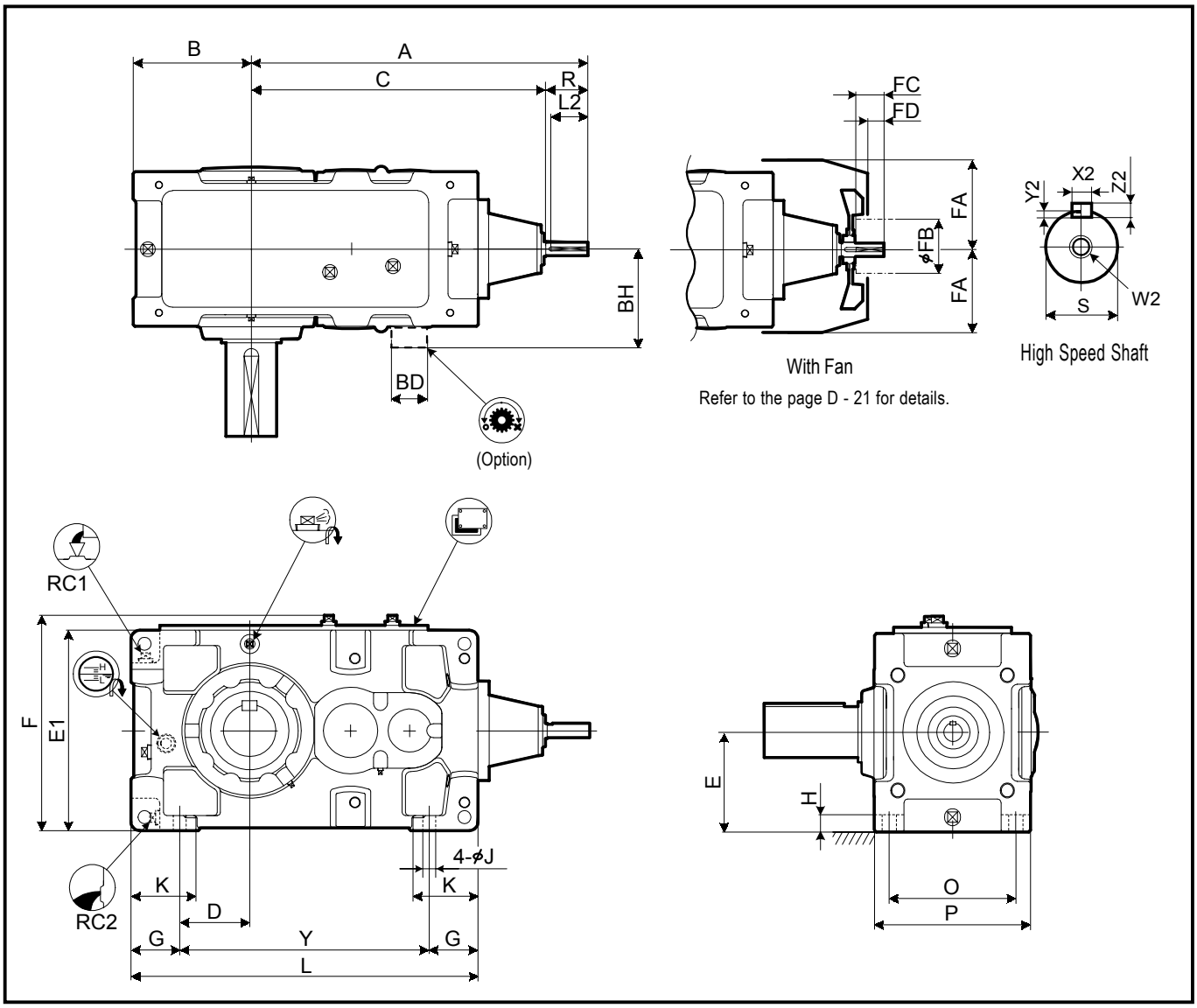

Size	A	B	C	D	E	E1	F	G	H	J	K	L	O	P	Y
9030	656	200	576	110	160	320	349	90	28	24	120	590	215	265	410
9035	687	219	607	129	185	370	399	90	28	24	120	640	215	265	460
9040	716	235	636	120	200	400	431	115	30	28	150	685	255	315	455
9050	808	255	728	138.5	210	420	451	116.5	32	28	150	775	285	345	542
9055	847	286	767	171	245	490	521	115	32	28	150	845	285	345	615

Size	High Speed Shaft							Fan				Backstop		RC1	RC2	Wt.	Oil Qty.
	R	S	W2/Depth	Key				FA	FB	FC	FD	BD	BH			kg	L
				X2	Y2	Z2	L2										
9030	80	28k6	M10/22	8	4	7	70	150	125	50	30	100	200	3/4"	3/4"	210	10
9035	80	28k6	M10/22	8	4	7	70	150	125	50	30	100	200	3/4"	3/4"	230	12
9040	80	30k6	M10/22	8	4	7	70	170	125	50	30	125	235	1"	1"	305	16
9050	80	35k6	M12/28	10	5	8	70	190	140	50	22	130	240	1"	1"	445	21
9055	80	35k6	M12/28	10	5	8	70	190	140	50	22	130	240	1"	1"	505	28

Units:mm

1.Key and keyways are based on ISO R773-1969 Close keys(JIS B1301-1996 Parallel key in fastening type)
2.The oil quantity is approximate.Oil shall be supplied within the range shown on the oil gauge.
3. Refer to the page D - 12 for dimensions not shown in these drawings.
4. Refer to the page D - 24 for the dimension of optional parts.

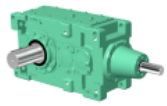

Slow Speed Shaft

Solid Shaft	Hollow Shaft (Shrink Disk Type)	Hollow Shaft (KeyType)
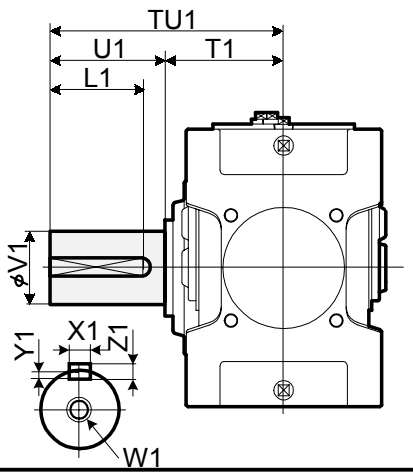	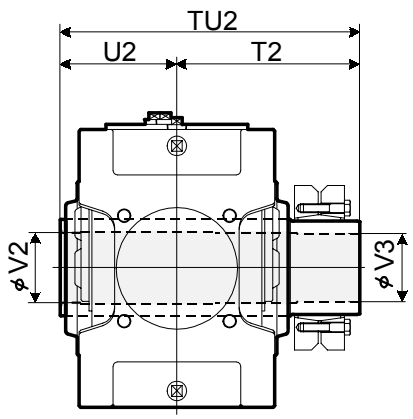 Refer to the page D-18 for details.	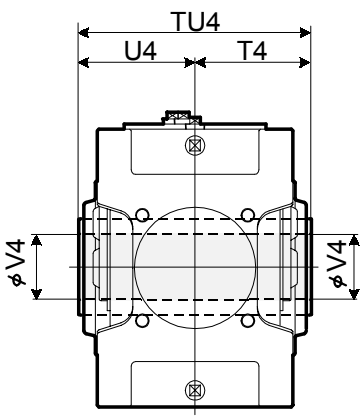 Refer to the page D -19 for details.

Size	Solid Shaft									Hollow Shaft (Shrink Disk Type)					Hollow Shaft (Key Type)			
	TU1	T1	U1	V1	W1/Depth	Key				TU2	T2	U2	V2	V3	TU4	T4	U4	V4
						X1	Y1	Z1	L1									
9030	330	160	170	80m6	M20/42	22	9	14	150	393	233	160	83	80	330	165	165	75
9035	330	160	170	90m6	M20/42	25	9	14	150	403	243	160	88	85	330	165	165	85
9040	349	179	170	95m6	M24/50	25	9	14	150	448	268	180	98	95	360	180	180	90
9050	411	201	210	110m6	M24/50	28	10	16	190	503	303	200	108	105	410	205	205	105
9055	411	201	210	120m6	M24/50	32	11	18	185	528	323	205	123	120	410	205	205	115

Units:mm

Standard Shaft Arrangement Configuration

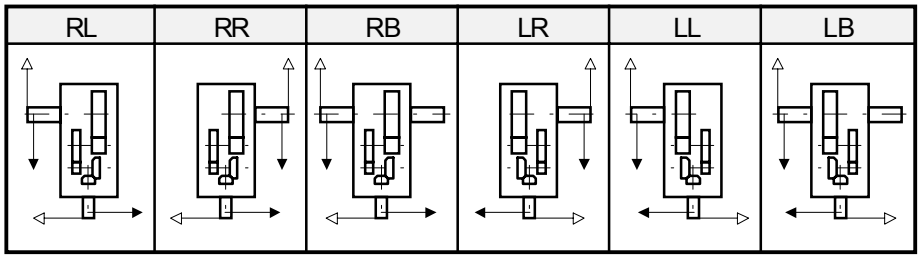

Nomenclature

P H A [ ] R 3 - [ ] [ ] [ ] - [ ]

Size: 9030, 9035, 9040, 9050, 9055

Shaft Arrangement: RL, RR, RB, LR, LL, LB

Low Speed Shaft Type:
- (blank) : Solid Shaft
- T : Hollow shaft (Shrink Disk type)
- K : Hollow shaft (Key type)

Fan:
- (blank) :Without Fan
- F :With Fan

Nominal Reduction Ratio

Size	Nominal Reduction Ratio													
	20	22.4	25	28	31.5	35.5	40	45	50	56	63	71	80	90
9030	O	O	O	O	O	O	O	O	O	O	O	O		
9035			O	O	O	O	O	O	O	O		O	O	O
9040	O	O	O	O	O	O	O	O		O	O	O		
9050	O	O	O	O	O	O	O	O	O	O	O	O		
9055			O	O	O	O	O	O	O	O	O	O	O	O

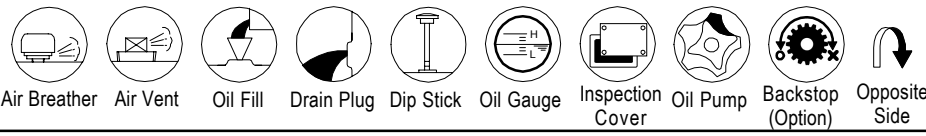

Air Breather, Air Vent, Oil Fill, Drain Plug, Dip Stick, Oil Gauge, Inspection Cover, Oil Pump, Backstop (Option), Opposite Side

Sumitomo Heavy Industries, Ltd.
http://www.shi.co.jp/ptc

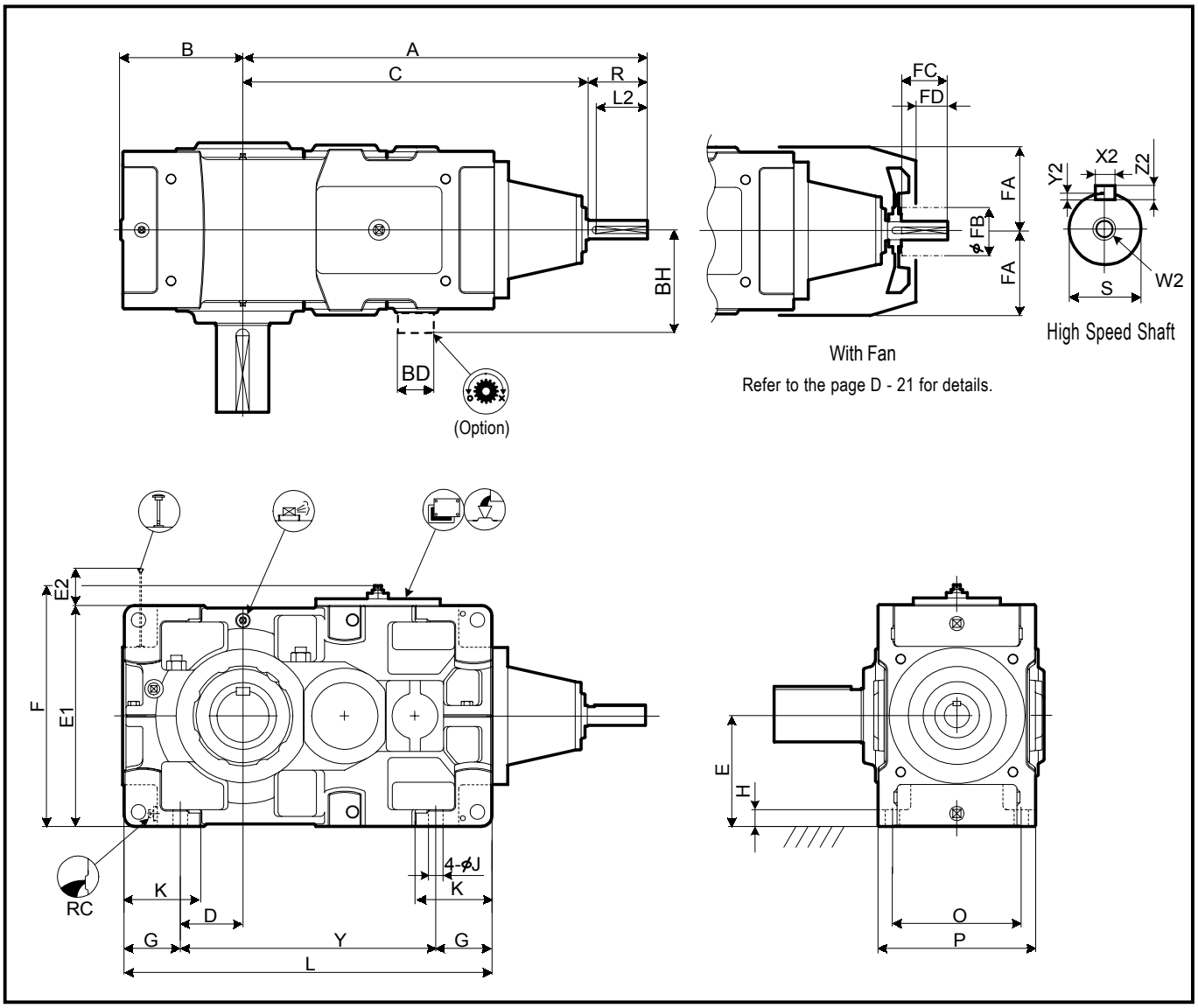

Size	A	B	C	D	E	E1	E2	F	G	H	J	K	L	O	P	Y
9060	939	291	829	151	265	530	158	578	135	35	35	180	885	310	380	615
9070	1027	328	917	163	300	600	183	648	160	40	42	215	1020	350	430	700
9075	1080	375	970	210	335	670	148	718	160	52	42	220	1120	350	430	800
9080	1176	370	1036	205	335	670	208	718	160	52	42	220	1155	380	460	835
9085	1232	414	1092	249	375	750	168	798	160	52	42	220	1255	380	460	935

Size	High Speed Shaft							Fan				Backstop		RC	Wt.	Oil Qty.
	R	S	W2/Depth	Key				FA	FB	FC	FD	BD	BH		kg	L
				X2	Y2	Z2	L2									
9060	110	45k6	M16/36	14	5.5	9	95	220	160	80	52	150	266	1"	660	29
9070	110	50k6	M16/36	14	5.5	9	95	245	160	80	52	175	308	1"	940	45
9075	110	50k6	M16/36	14	5.5	9	95	245	160	80	52	175	308	1"	1190	52
9080	140	60m6	M20/42	18	7	11	125	270	160	105	65	190	353	1"	1350	60
9085	140	60m6	M20/42	18	7	11	125	270	160	105	65	190	353	1"	1610	75

Units:mm

1.Key and keyways are based on ISO R773-1969 Close keys(JIS B1301-1996 Parallel key in fastening type)
2.The oil quantity is approximate.Oil shall be supplied within the range shown on the oil gauge.
3. Refer to the page D - 14 for dimensions not shown in these drawings.
4. Refer to the page D - 27 for the dimension of optional parts.

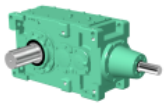

Slow Speed Shaft

Solid Shaft	Hollow Shaft (Shrink Disk Type)	Hollow Shaft (KeyType)
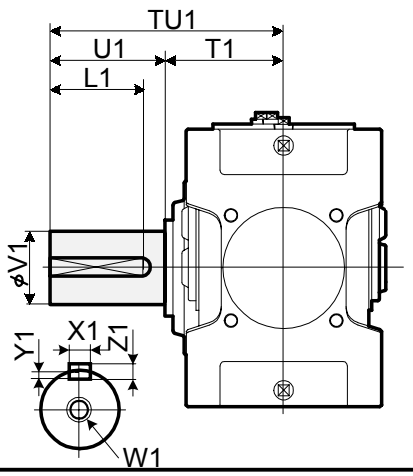	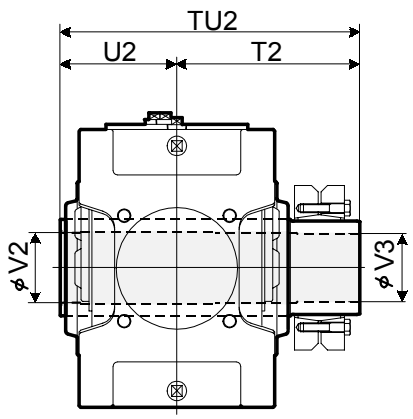 Refer to the page D-18 for details.	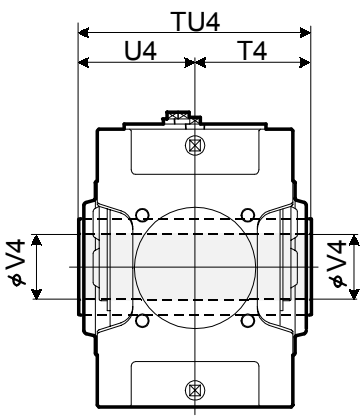 Refer to the page D -19 for details.

Size	Solid Shaft									Hollow Shaft (Shrink Disk Type)					Hollow Shaft (Key Type)			
	TU1	T1	U1	V1	W1/Depth	Key				TU2	T2	U2	V2	V3	TU4	T4	U4	V4
						X1	Y1	Z1	L1									
9060	440	230	210	125m6	M24/50	32	11	18	185	583	353	230	128	125	470	235	235	125
9070	509	259	250	145m6	M30/60	36	12	20	225	644	384	260	148	145	530	265	265	145
9075	562	262	300	160m6	M30/60	40	13	22	275	651	386	265	158	155	530	265	265	150
9080	582	282	300	165m6	M30/60	40	13	22	275	714	429	285	173	170	570	285	285	165
9085	585	285	300	175m6	M30/60	45	15	25	270	714	429	285	183	180	570	285	285	175

Units:mm

Standard Shaft Arrangement Configuration

RL	RR	RB	LR	LL	LB
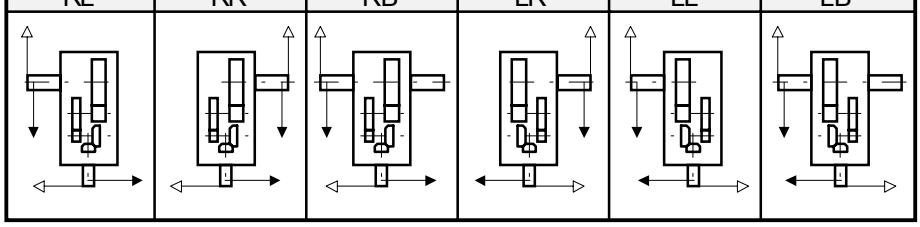					

Nomenclature

P H D [ ] R 3 - [ ] [ ] [ ] - [ ]

Size: 9060, 9070, 9075, 9080, 9085

Shaft Arrangement: RL, RR, RB, LR, LL, LB

Low Speed Shaft Type:
- (blank) : Solid Shaft
- T : Hollow shaft (Shrink Disk type)
- K : Hollow shaft (Key type)

Fan:
- (blank) :Without Fan
- F :With Fan

Nominal Reduction Ratio

Size	Nominal Reduction Ratio													
	20	22.4	25	28	31.5	35.5	40	45	50	56	63	71	80	90
9060	O	O	O	O	O	O	O	O	O	O	O	O		
9070	O	O	O	O	O	O	O	O	O	O	O	O		
9075				O	O	O	O	O	O	O	O	O	O	O
9080	O	O	O	O	O	O	O	O	O	O	O	O		
9085			O	O	O	O	O	O	O	O	O	O	O	O

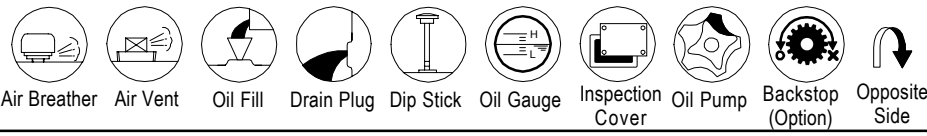

Air Breather | Air Vent | Oil Fill | Drain Plug | Dip Stick | Oil Gauge | Inspection Cover | Oil Pump | Backstop (Option) | Opposite Side

Sumitomo Heavy Industries, Ltd.
http://www.shi.co.jp/ptc

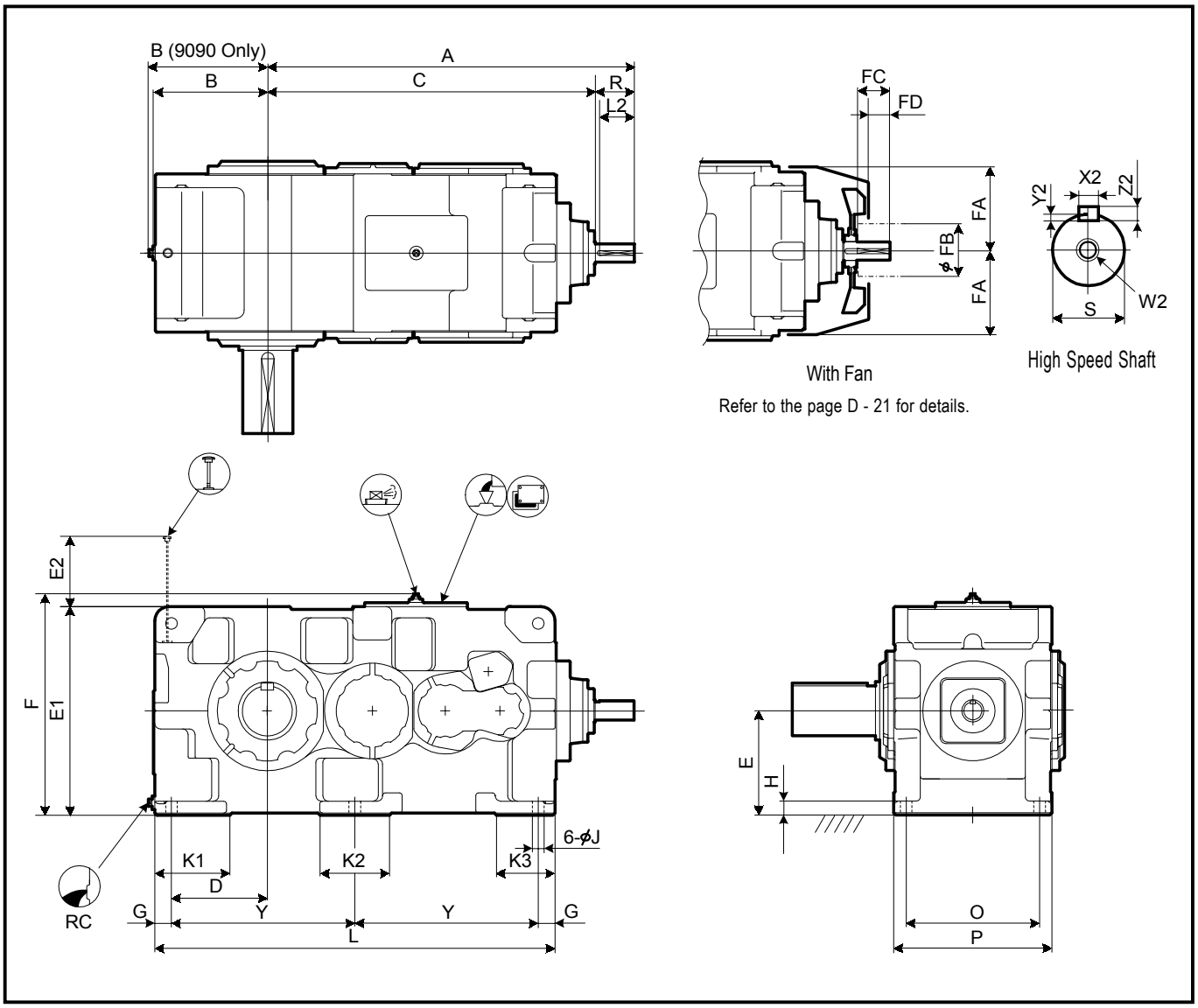

Size	A	B	C	D	E	E1	E2	F	G	H	J	K1	K2	K3	L	O	P	Y
9090	1320	428	1180	345	375	750	253	797	60	50	42	270	250	210	1440	480	570	660
9095	1350	440	1210	375	400	800	258	847	60	50	42	290	250	210	1500	480	570	690
9100	1474	450	1334	375	425	850	282	897	70	55	48	300	280	240	1610	560	650	735
9105	1508	485	1368	410	450	900	287	947	70	55	48	320	280	240	1680	560	650	770
9110	1684	500	1514	420	475	950	303	997	75	60	56	340	310	260	1810	610	710	830
9115	1733	550	1563	470	500	1000	302	1047	75	60	56	350	310	260	1910	610	710	880

Size	High Speed Shaft							Fan				RC	Wt.	Oil Qty.
	R	S	W2/Depth	Key				FA	FB	FC	FD			
				X2	Y2	Z2	L2						kg	L
9090	140	65m6	M20/42	18	7	11	125	340	200	105	65	1 1/2"	2150	120
9095	140	65m6	M20/42	18	7	11	125	340	200	105	65	1 1/2"	2400	155
9100	140	75m6	M20/42	20	7.5	12	125	380	225	105	60	1 1/2"	2880	180
9105	140	75m6	M20/42	20	7.5	12	125	380	225	105	60	1 1/2"	3440	220
9110	170	85m6	M20/42	22	9	14	150	410	225	135	90	1 1/2"	4160	250
9115	170	85m6	M20/42	22	9	14	150	410	225	135	90	1 1/2"	4610	310

Units:mm

1.Key and keyways are based on ISO R773-1969 Close keys(JIS B1301-1996 Parallel key in fastening type)
2.The oil quantity is approximate.Oil shall be supplied within the range shown on the oil gauge.
3. Refer to the page D - 16 for dimensions not shown in these drawings.
4. Refer to the page D - 30 for the dimension of optional parts.

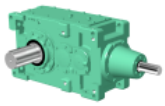

Slow Speed Shaft

Solid Shaft	Hollow Shaft (Shrink Disk Type)
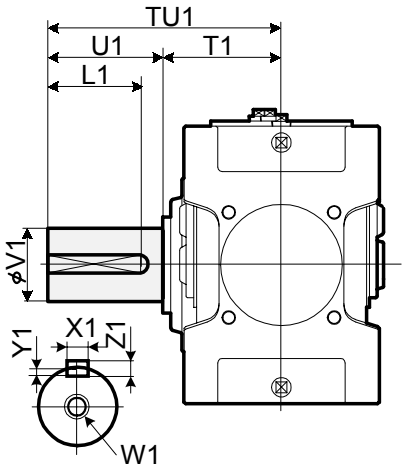	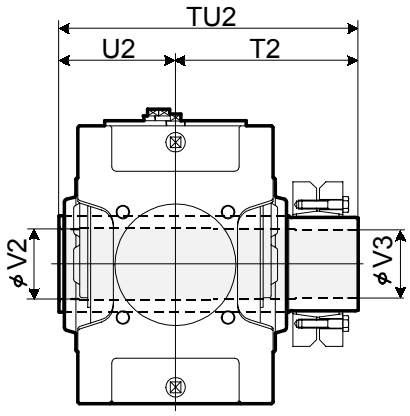

Refer to the page D - 18 for details.

Size	Solid Shaft									Hollow Shaft (Shrink Disk Type)				
	TU1	T1	U1	V1	W1/Depth	Key				TU2	T2	U2	V2	V3
						X1	Y1	Z1	L1					
9090	650	350	300	180m6	M30/60	45	15	25	270	844	494	350	193	190
9095	700	350	350	190m6	M30/60	45	15	25	320	859	509	350	203	200
9100	740	390	350	200m6	M30/60	45	15	25	320	934	544	390	213	210
9105	740	390	350	220m6	M30/60	50	17	28	320	949	559	390	223	220
9110	770	420	350	220m6	M30/60	50	17	28	320	1030	610	420	243	240
9115	830	420	410	240m6	M30/60	56	20	32	375	1065	645	420	253	250

Units:mm

Standard Shaft Arrangement Configuration

RL	RR	RB	LR	LL	LB
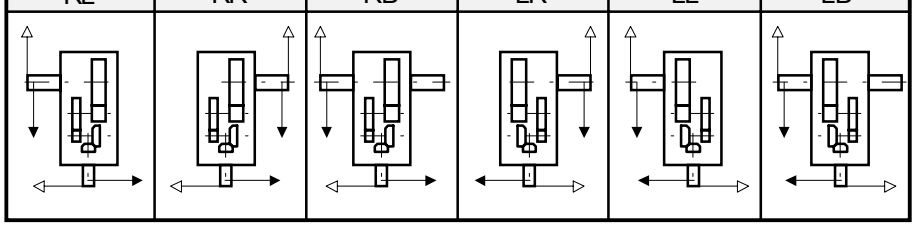					

Nomenclature

P H D [Size] R 3 - [Shaft Arrangement] [Low Speed Shaft Type] [Fan] - [Nominal Reduction Ratio]

Size: 9090, 9095, 9100, 9105, 9110, 9115

Shaft Arrangement: RL, RR, RB, LR, LL, LB

Low Speed Shaft Type:
(blank) : Solid Shaft
T : Hollow shaft (Shrink Disk type)

Fan:
(blank) : Without Fan
F : With Fan

Size	Nominal Reduction Ratio													
	20	22.4	25	28	31.5	35.5	40	45	50	56	63	71	80	90
9090	O	O	O	O	O	O	O	O	O	O	O	O	O	
9095		O	O	O	O	O	O	O	O	O	O	O	O	O
9100	O	O	O	O	O	O	O	O	O	O	O	O	O	
9105		O	O	O	O	O	O	O	O	O	O	O	O	O
9110	O	O	O	O	O	O	O	O	O	O	O	O	O	
9115		O	O	O	O	O	O	O	O	O	O	O	O	O

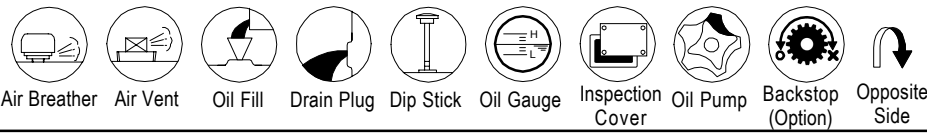

Air Breather | Air Vent | Oil Fill | Drain Plug | Dip Stick | Oil Gauge | Inspection Cover | Oil Pump | Backstop (Option) | Opposite Side

Sumitomo Heavy Industries, Ltd.
http://www.shi.co.jp/ptc

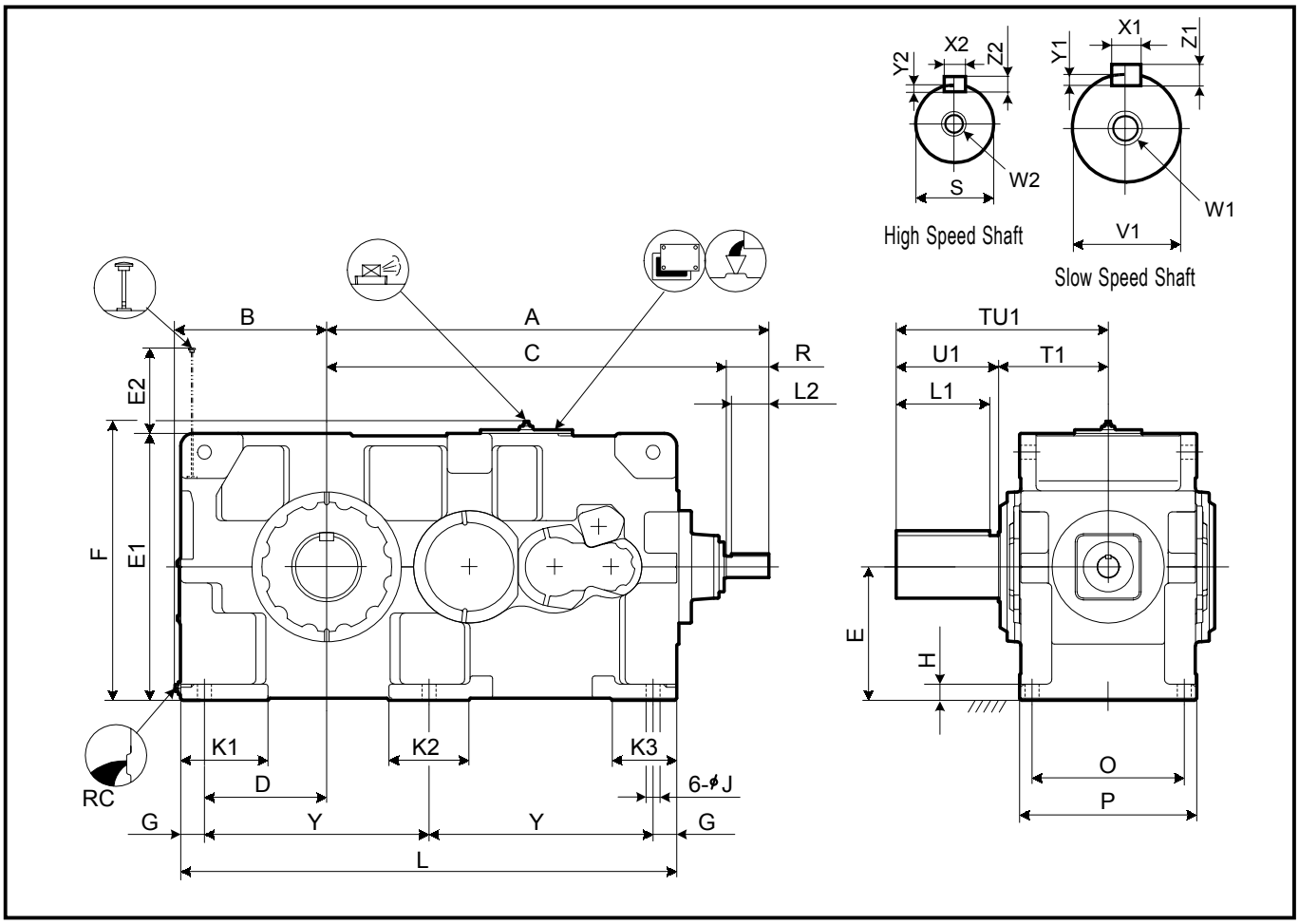

Size	Ratio	A	B	C	D	E	E1	E2	F	G	H	J	K1	K2	K3	L	O	P	Y
9118	ALL	1774	608	1604	490	535	1070	343	1117	95	65	56	350	320	260	1990	610	710	900
9121	<=31.5	2053	663	1843	545	580	1160	357	1207	95	70	56	390	300	270	2180	680	780	995
	>=35.5	2013	663	1843	545	580	1160	357	1207	95	70	56	390	300	270	2180	680	780	995
9126	<=31.5	2053	663	1843	545	580	1160	357	1207	95	70	56	390	300	270	2180	680	780	995
	>=35.5	2013	663	1843	545	580	1160	357	1207	95	70	56	390	300	270	2180	680	780	995

Size	Ratio	High Speed Shaft							RC	Wt. kg	Oil Qty. L
		R	S	W2/Depth	Key						
					X2	Y2	Z2	L2			
9118	ALL	170	85m6	M20/42	22	9	14	150	1 1/2"	5200	350
9121	<=31.5	210	110m6	M24/50	28	10	16	190	1 1/2"	6200	460
	>=35.5	170	90m6	M24/50	25	9	14	150	1 1/2"	6200	460
9126	<=31.5	210	110m6	M24/50	28	10	16	190	1 1/2"	6550	460
	>=35.5	170	90m6	M24/50	25	9	14	150	1 1/2"	6550	460

Size	Ratio	Low Seed Solid Shaft								
		TU1	T1	U1	V1	W1/Depth	Key			
							X1	Y1	Z1	L1
9118	ALL	850	440	410	260m6	M36/70	56	20	32	375
9121	<=31.5	935	465	470	280m6	M36/70	63	20	32	425
	>=35.5	935	465	470	280m6	M36/70	63	20	32	425
9126	<=31.5	935	465	470	300m6	M36/70	70	22	36	425
	>=35.5	935	465	470	300m6	M36/70	70	22	36	425

Units:mm

1.Key and keyways are based on ISO R773-1969 Close keys(JIS B1301-1996 Parallel key in fastening type)
2.The oil quantity is approximate.Oil shall be supplied within the range shown on the oil gauge.
3. Consult us for dimensions not shown in these drawings.

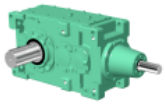

Standard Shaft Arrangement Configuration

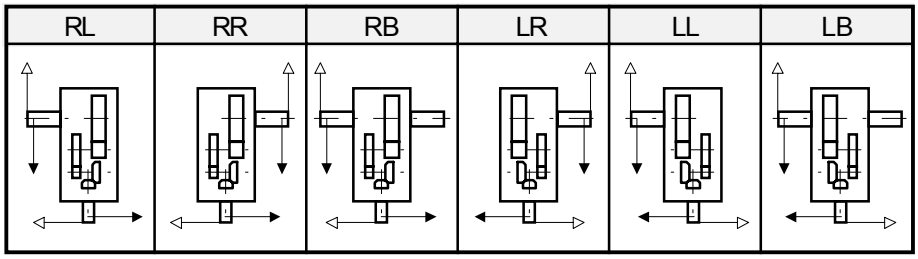

Nomenclature

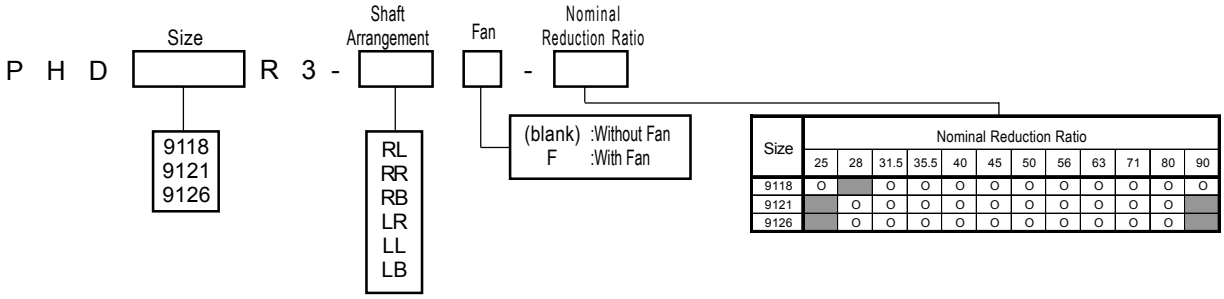

Size	Nominal Reduction Ratio											
	25	28	31.5	35.5	40	45	50	56	63	71	80	90
9118	O		O	O	O	O	O	O	O	O	O	O
9121		O	O	O	O	O	O	O	O	O	O	
9126		O	O	O	O	O	O	O	O	O	O	

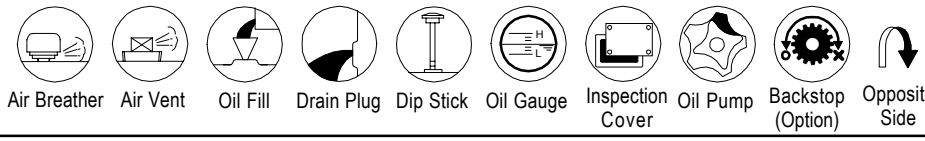

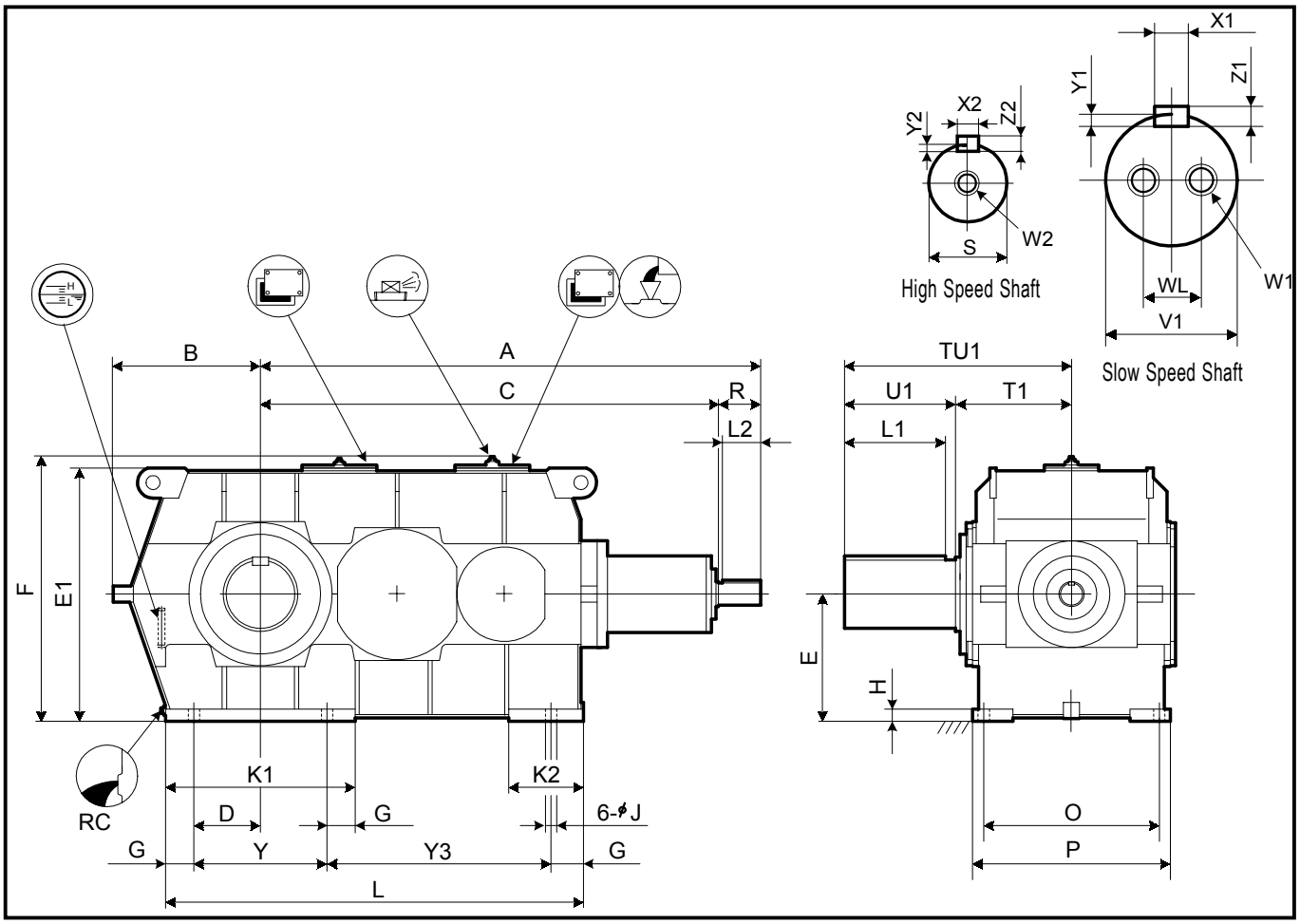

Size	A	B	C	D	E	E1	F	G	H	J	K1	K2	L	O	P	Y	Y3
9128	2244	680	2034	330	600	1194	1241	140	55	66	940	280	1930	710	840	660	990
9131	2479	730	2269	330	630	1256	1303	140	60	66	940	280	2070	850	980	660	1130
9136	2479	730	2269	330	630	1256	1303	140	60	66	940	280	2070	850	980	660	1130

Size	High Speed Shaft							RC	Wt.	Oil Qty.
	R	S	W2/Depth	Key						
				X2	Y2	Z2	L2		kg	L
9128	210	100m6	M24/50	28	10	16	190	1 1/2"	7400	350
9131	210	110m6	M24/50	28	10	16	190	1 1/2"	9850	510
9136	210	110m6	M24/50	28	10	16	190	1 1/2"	10200	500

Size	Low Seed Solid Shaft									
	TU1	T1	U1	V1	W1/Depth	WL	Key			
							X1	Y1	Z1	L1
9128	950	480	470	320m6	M36/70	200	70	22	36	425
9131	1100	550	550	340m6	M36/70	215	80	25	40	500
9136	1110	560	550	360m6	M36/70	230	80	25	40	500

Units:mm

1.Key and keyways are based on ISO R773-1969 Close keys(JIS B1301-1996 Parallel key in fastening type)
2.The oil quantity is approximate.Oil shall be supplied within the range shown on the oil gauge.
3. Consult us for dimensions not shown in these drawings.

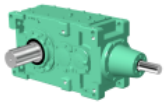

Standard Shaft Arrangement Configuration

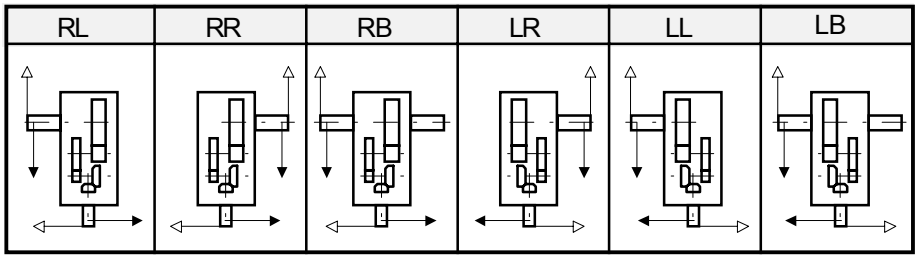

Nomenclature

P H D [ ] R 3 A - [ ] [ ] - [ ]

Size: 9128, 9131, 9136

Shaft Arrangement: RL, RR, RB, LR, LL, LB

Fan: (blank) :Without Fan; F :With Fan

Nominal Reduction Ratio

Size	Nominal Reduction Ratio									
	28	31.5	35.5	40	45	50	56	63	71	80
9128			O	O	O	O	O	O	O	O
9131	O	O	O	O	O	O	O	O		
9136	O	O	O	O	O	O	O	O		

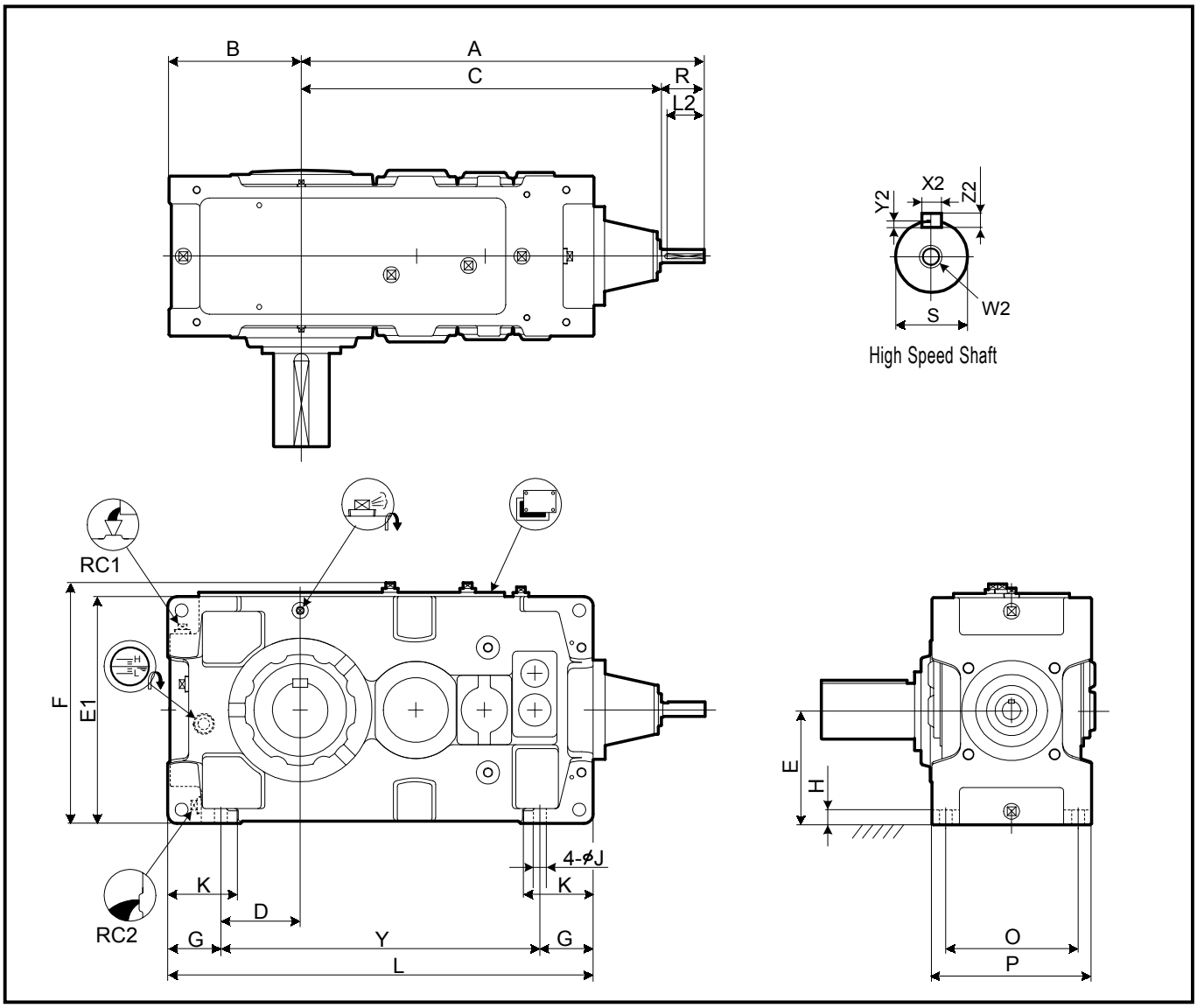

Size	A	B	C	D	E	E1	F	G	H	J	K	L	O	P	Y
9040	770	235	690	120	200	400	431	115	30	28	150	759	255	315	529
9050	859	255	779	138.5	210	420	451	116.5	32	28	150	848	285	345	615
9055	898	286	818	171	245	490	521	115	32	28	150	918	285	345	688

Size	High Speed Shaft							RC1	RC2	Wt. kg	Oil Qty. L
	R	S	W2/Depth	Key							
				X2	Y2	Z2	L2				
9040	80	28k6	M10/22	8	4	7	70	1"	1"	325	19
9050	80	28k6	M10/22	8	4	7	70	1"	1"	460	24
9055	80	28k6	M10/22	8	4	7	70	1"	1"	520	29

Units:mm

1.Key and keyways are based on ISO R773-1969 Close keys(JIS B1301-1996 Parallel key in fastening type)
2.The oil quantity is approximate.Oil shall be supplied within the range shown on the oil gauge.
3. Refer to the page D - 13 for dimensions not shown in these drawings.
4. Refer to the page D - 24 for the dimension of optional parts.

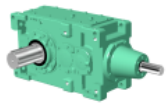

Slow Speed Shaft

Solid Shaft	Hollow Shaft (Shrink Disk Type)	Hollow Shaft (KeyType)

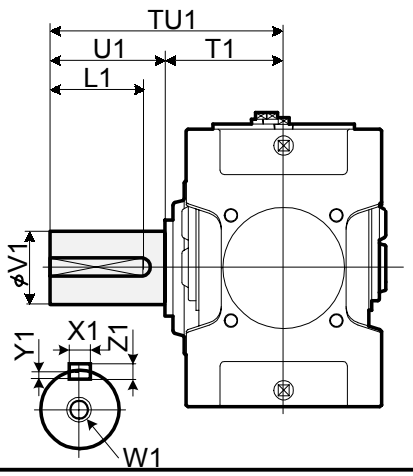

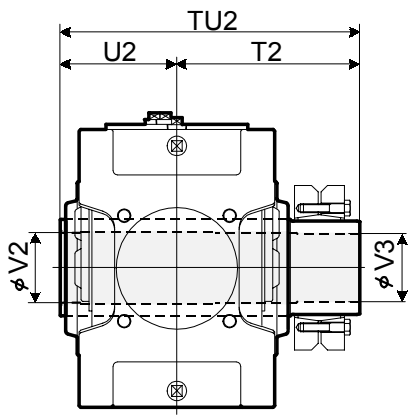

Refer to the page D-18 for details.

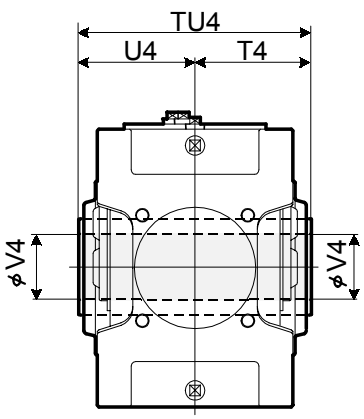

Refer to the page D -19 for details.

Size	Solid Shaft									Hollow Shaft (Shrink Disk Type)					Hollow Shaft (Key Type)			
	TU1	T1	U1	V1	W1/Depth	Key				TU2	T2	U2	V2	V3	TU4	T4	U4	V4
						X1	Y1	Z1	L1									
9040	349	179	170	95m6	M24/50	25	9	14	150	448	268	180	98	95	360	180	180	90
9050	411	201	210	110m6	M24/50	28	10	16	190	503	303	200	108	105	410	205	205	105
9055	411	201	210	120m6	M24/50	32	11	18	185	528	323	205	123	120	410	205	205	115

Units:mm

Standard Shaft Arrangement Configuration

RL	RR	RB	LR	LL	LB

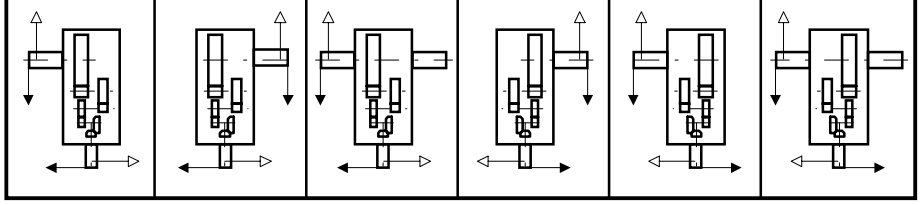

Nomenclature

P H A [ ] R 4 - [ ] [ ] - [ ]

- Size: 9040, 9050, 9055
- Shaft Arrangement: RL, RR, RB, LR, LL, LB
- Low Speed Shaft Type: (blank) : Solid Shaft; T : Hollow shaft (Shrink Disk type); K : Hollow shaft (Key type)
- Nominal Reduction Ratio

Size	Nominal Reduction Ratio															
	80	90	100	112	125	140	160	180	200	224	250	280	315	355	400	450
9040	O	O	O	O	O	O										
9050	O	O	O	O	O	O	O	O	O	O	O	O	O	O		
9055				O	O	O	O	O	O	O	O	O	O	O	O	O

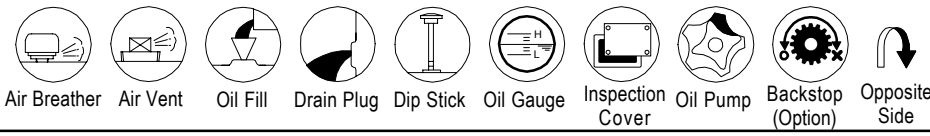

Sumitomo Heavy Industries, Ltd.
http://www.shi.co.jp/ptc

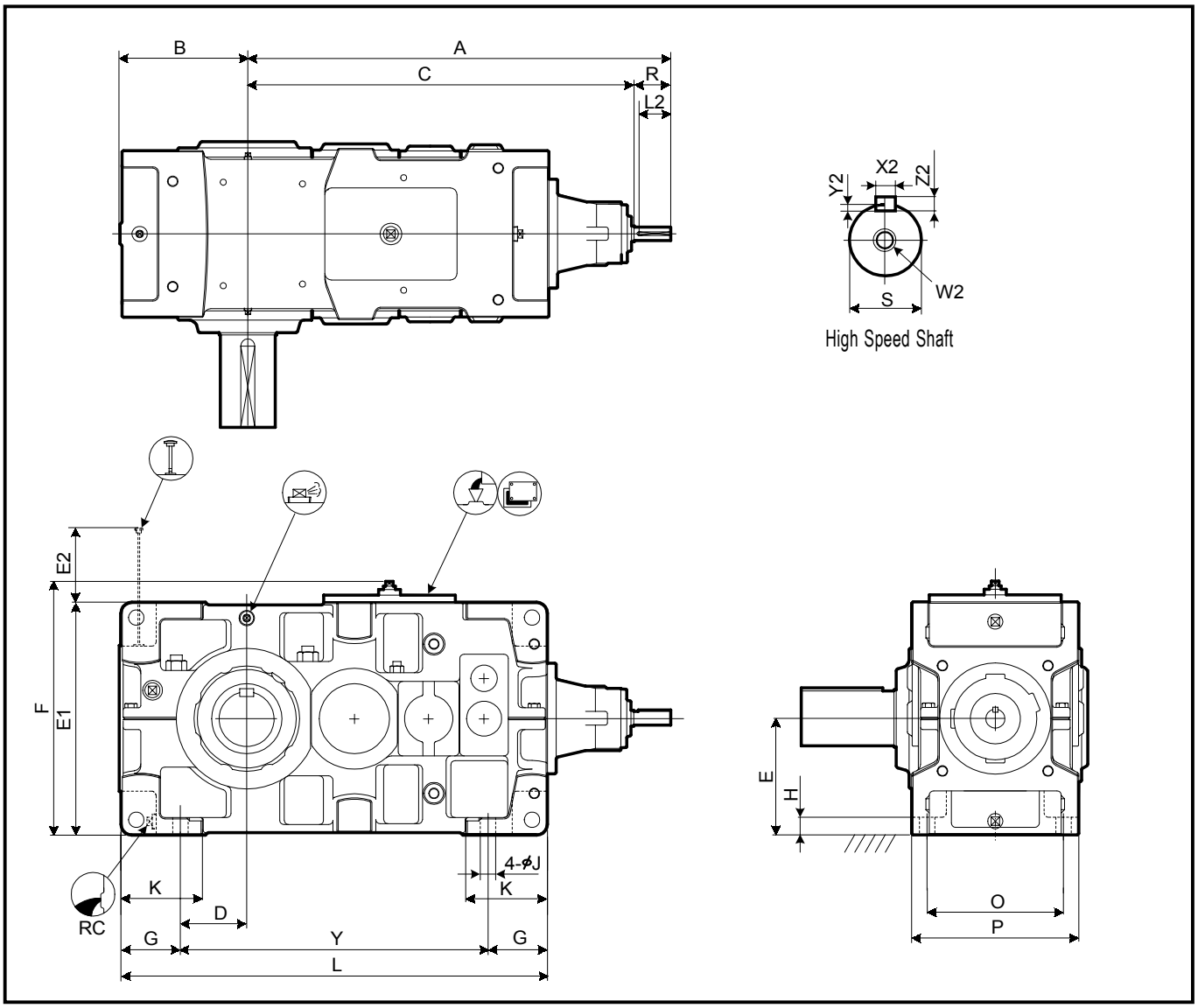

Size	A	B	C	D	E	E1	E2	F	G	H	J	K	L	O	P	Y
9060	950	291	870	151	265	530	121	578	135	35	35	180	970	310	380	700
9070	1080	328	1000	163	300	600	140	648	160	40	42	215	1115	350	430	795
9075	1133	375	1053	210	335	670	105	718	160	52	42	220	1215	350	430	895
9080	1250	370	1140	205	335	670	162	718	160	52	42	220	1275	380	460	955
9085	1306	414	1196	249	375	750	122	798	160	52	42	220	1375	380	460	1055

Size	High Speed Shaft							RC	Wt. kg	Oil Qty. L
	R	S	W2/Depth	Key						
				X2	Y2	Z2	L2			
9060	80	30k6	M10/22	8	4	7	70	1"	670	38
9070	80	35k6	M12/28	10	5	8	70	1"	960	57
9075	80	35k6	M12/28	10	5	8	70	1"	1180	67
9080	110	45k6	M16/36	14	5.5	9	95	1"	1390	73
9085	110	45k6	M16/36	14	5.5	9	95	1"	1650	90

Units:mm

1.Key and keyways are based on ISO R773-1969 Close keys(JIS B1301-1996 Parallel key in fastening type)
2.The oil quantity is approximate.Oil shall be supplied within the range shown on the oil gauge.
3. Refer to the page D - 15 for dimensions not shown in these drawings.
4. Refer to the page D - 27 for the dimension of optional parts.

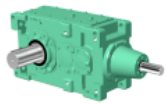

Slow Speed Shaft

Solid Shaft	Hollow Shaft (Shrink Disk Type)	Hollow Shaft (KeyType)

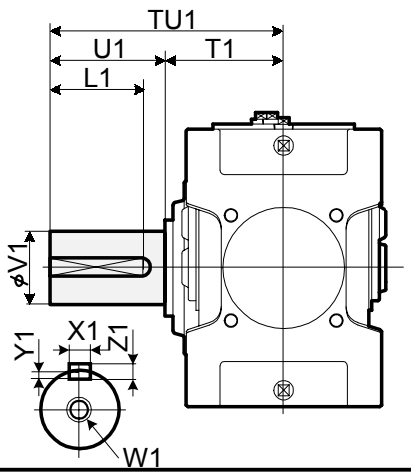

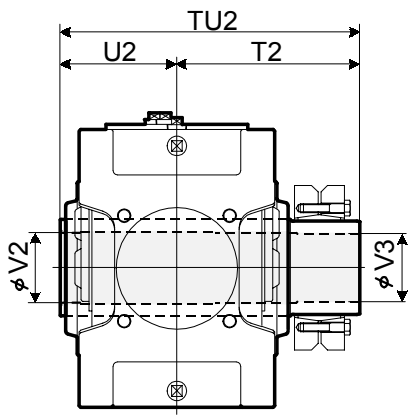

Refer to the page D-18 for details.

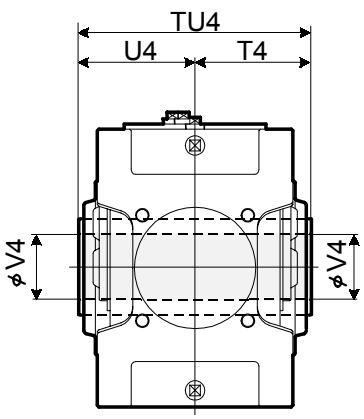

Refer to the page D -19 for details.

Size	Solid Shaft									Hollow Shaft (Shrink Disk Type)					Hollow Shaft (Key Type)			
	TU1	T1	U1	V1	W1/Depth	Key				TU2	T2	U2	V2	V3	TU4	T4	U4	V4
						X1	Y1	Z1	L1									
9060	440	230	210	125m6	M24/50	32	11	18	185	583	353	230	128	125	470	235	235	125
9070	509	259	250	145m6	M30/60	36	12	20	225	644	384	260	148	145	530	265	265	145
9075	562	262	300	160m6	M30/60	40	13	22	275	651	386	265	158	155	530	265	265	150
9080	582	282	300	165m6	M30/60	40	13	22	275	714	429	285	173	170	570	285	285	165
9085	585	285	300	175m6	M30/60	45	15	25	270	714	429	285	183	180	570	285	285	175

Units:mm

Standard Shaft Arrangement Configuration

RL	RR	RB	LR	LL	LB

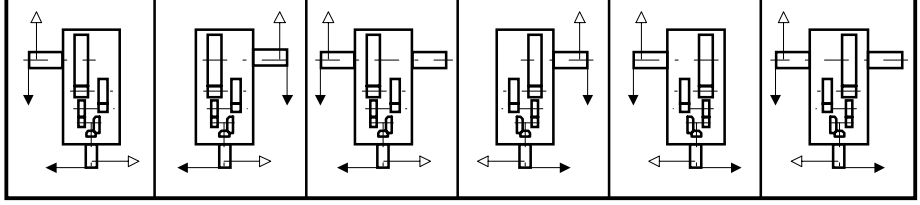

Nomenclature

P H D [ ] R 4 - [ ] [ ] - [ ]

Size: 9060, 9070, 9075, 9080, 9085

Shaft Arrangement: RL, RR, RB, LR, LL, LB

Low Speed Shaft Type:
(blank) : Solid Shaft
T : Hollow shaft (Shrink Disk type)
K : Hollow shaft (Key type)

Nominal Reduction Ratio

Size	80	90	100	112	125	140	160	180	200	224	250	280	315	355	400	450
9060		O	O	O	O	O	O	O	O	O	O	O	O	O		
9070	O	O	O	O	O	O	O	O	O	O	O	O	O	O		
9075			O	O	O	O	O	O		O	O	O	O	O	O	O
9080	O	O	O	O	O	O	O	O	O	O	O	O	O	O		
9085			O	O	O	O	O	O	O	O	O	O	O	O	O	O

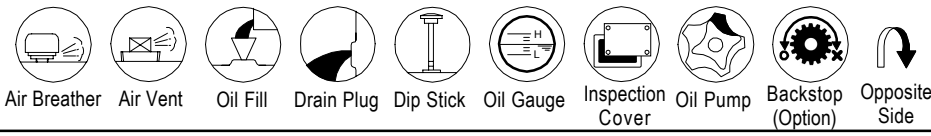

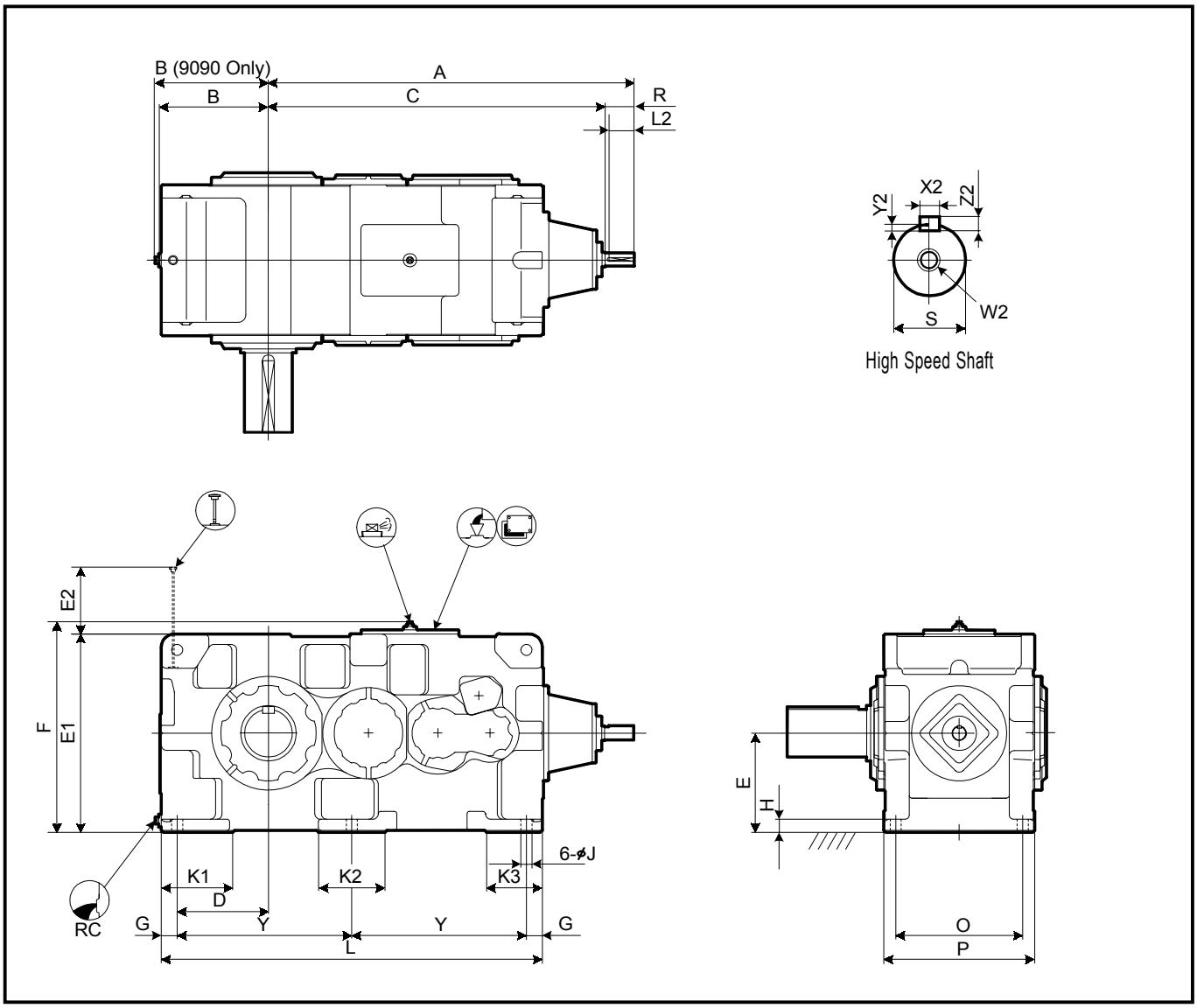

Size	A	B	C	D	E	E1	E2	F	G	H	J	K1	K2	K3	L	O	P	Y
9090	1382	410	1272	345	375	750	198	797	60	50	42	270	250	210	1440	480	570	660
9095	1412	440	1302	375	400	800	203	847	60	50	42	290	250	210	1500	480	570	690
9100	1570	450	1430	375	425	850	215	897	70	55	48	300	280	240	1610	560	650	735
9105	1604	485	1464	410	450	900	220	947	70	55	48	320	280	240	1680	560	650	770
9110	1670	500	1530	420	475	950	225	997	75	60	56	340	310	260	1810	610	710	830
9115	1719	550	1579	470	500	1000	224	1047	75	60	56	350	310	260	1910	610	710	880

Size	High Speed Shaft							RC	Wt. kg	Oil Qty. L
	R	S	W2/Depth	Key						
				X2	Y2	Z2	L2			
9090	110	50k6	M16/36	14	5.5	9	95	1 1/2"	2150	150
9095	110	50k6	M16/36	14	5.5	9	95	1 1/2"	2400	180
9100	140	60m6	M20/42	18	7	11	125	1 1/2"	2880	210
9105	140	60m6	M20/42	18	7	11	125	1 1/2"	3440	255
9110	140	60m6	M20/42	18	7	11	125	1 1/2"	4060	300
9115	140	60m6	M20/42	18	7	11	125	1 1/2"	4510	360

Units:mm

1.Key and keyways are based on ISO R773-1969 Close keys(JIS B1301-1996 Parallel key in fastening type)
2.The oil quantity is approximate.Oil shall be supplied within the range shown on the oil gauge.
3. Refer to the page D - 16 for dimensions not shown in these drawings.
4. Refer to the page D - 30 for the dimension of optional parts.

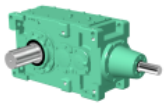

Slow Speed Shaft

Solid Shaft	Hollow Shaft (Shrink Disk Type)
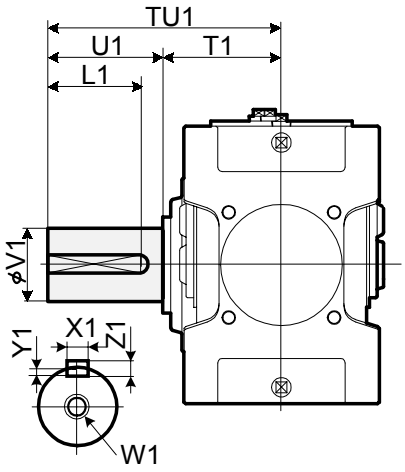	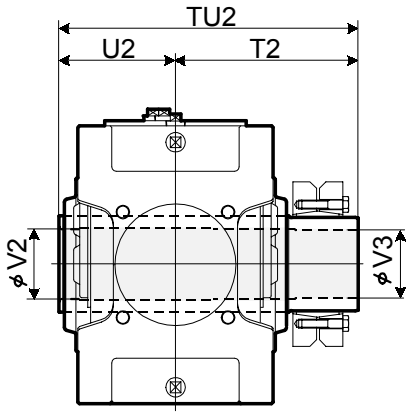

Refer to the page D - 18 for details.

Size	Solid Shaft									Hollow Shaft (Shrink Disk Type)				
	TU1	T1	U1	V1	W1/Depth	Key				TU2	T2	U2	V2	V3
						X1	Y1	Z1	L1					
9090	650	350	300	180m6	M30/60	45	15	25	270	844	494	350	193	190
9095	700	350	350	190m6	M30/60	45	15	25	320	859	509	350	203	200
9100	740	390	350	200m6	M30/60	45	15	25	320	934	544	390	213	210
9105	740	390	350	220m6	M30/60	50	17	28	320	949	559	390	223	220
9110	770	420	350	220m6	M30/60	50	17	28	320	1030	610	420	243	240
9115	830	420	410	240m6	M30/60	56	20	32	375	1065	645	420	253	250

Units:mm

Standard Shaft Arrangement Configuration

RL	RR	RB	LR	LL	LB
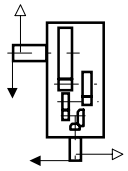	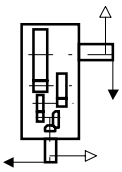	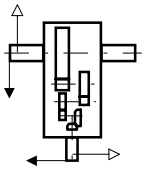	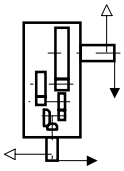	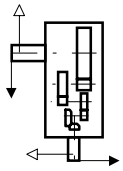	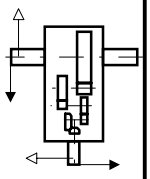

Nomenclature

P H D [ ] R 4 - [ ] [ ] - [ ]

Size: 9090, 9095, 9100, 9105, 9110, 9115

Shaft Arrangement: RL, RR, RB, LR, LL, LB

Low Speed Shaft Type:
(blank) : Solid Shaft
T : Hollow shaft (Shrink Disk type)

Nominal Reduction Ratio

Size	90	100	112	125	140	160	180	200	224	250	280	315	355	400
9090	O	O	O	O	O	O	O	O	O	O	O	O	O	
9095		O	O	O	O	O	O	O	O	O	O	O	O	O
9100	O	O	O	O	O	O	O	O	O	O	O	O	O	
9105		O	O	O	O	O	O	O	O	O	O	O	O	O
9110	O	O	O	O	O	O	O	O	O	O	O	O	O	
9115		O	O	O	O	O	O	O	O	O	O	O	O	O

Air Breather

Air Vent

Oil Fill

Drain Plug

Dip Stick

Oil Gauge

Inspection Cover

Oil Pump

Backstop (Option)

Opposite Side

Sumitomo Heavy Industries, Ltd.
http://www.shi.co.jp/ptc

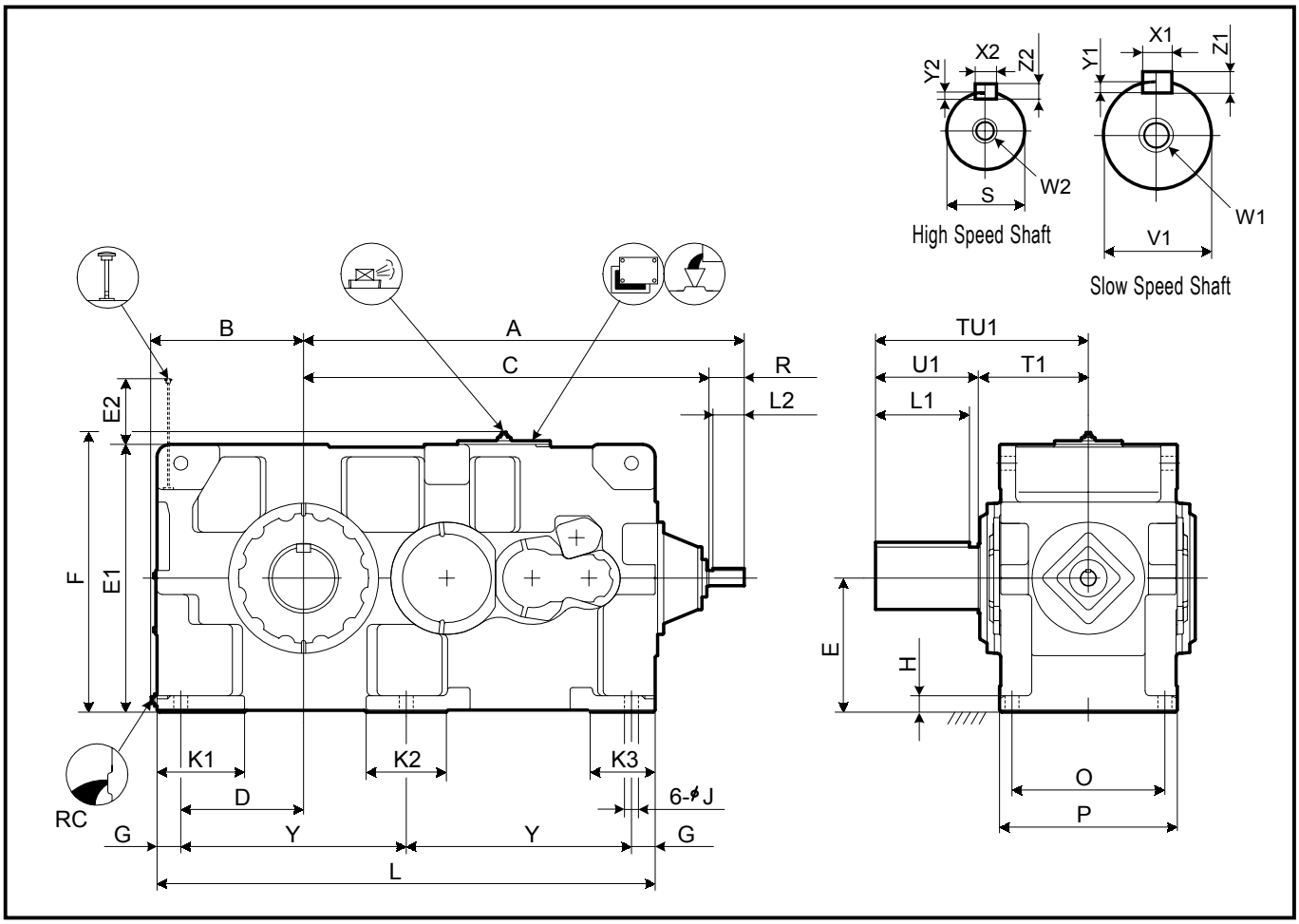

Size	A	B	C	D	E	E1	E2	F	G	H	J	K1	K2	K3	L	O	P	Y
9118	1760	608	1620	490	535	1070	263	1117	95	65	56	350	320	260	1990	610	710	900
9121	1970	663	1830	545	580	1160	257	1207	95	70	56	390	300	270	2180	680	780	995
9126	1970	663	1830	545	580	1160	257	1207	95	70	56	390	300	270	2180	680	780	995

Size	High Speed Shaft							RC	Wt. kg	Oil Qty. L
	R	S	W2/Depth	Key						
				X2	Y2	Z2	L2			
9118	140	60m6	M20/42	18	7	11	125	1 1/2"	5100	390
9121	140	65m6	M20/42	18	7	11	125	1 1/2"	6150	540
9126	140	65m6	M20/42	18	7	11	125	1 1/2"	6450	530

Size	Slow Speed Shaft								
	TU1	T1	U1	V1	W1/Depth	Key			
						X1	Y1	Z1	L1
9118	850	440	410	260m6	M36/70	56	20	32	375
9121	935	465	470	280m6	M36/70	63	20	32	425
9126	935	465	470	300m6	M36/70	70	22	36	425

Units:mm

1.Key and keyways are based on ISO R773-1969 Close keys(JIS B1301-1996 Parallel key in fastening type)
2.The oil quantity is approximate.Oil shall be supplied within the range shown on the oil gauge.
3. Consult us for dimensions not shown in these drawings.

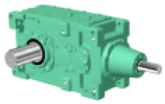

Standard Shaft Arrangement Configuration

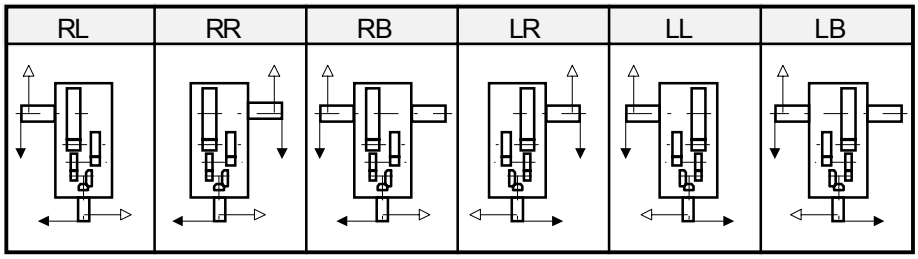

Nomenclature

P H D [ ] R 4 - [ ] - [ ]

Size: 9118, 9121, 9126

Shaft Arrangement: RL, RR, RB, LR, LL, LB

Nominal Reduction Ratio

Size	Nominal Reduction Ratio													
	90	100	112	125	140	160	180	200	224	250	280	315	355	400
9118		O	O	O	O	O	O	O	O	O	O	O	O	O
9121	O	O	O	O	O	O	O	O	O	O	O	O	O	
9126	O	O	O	O	O	O	O	O	O	O	O	O	O	

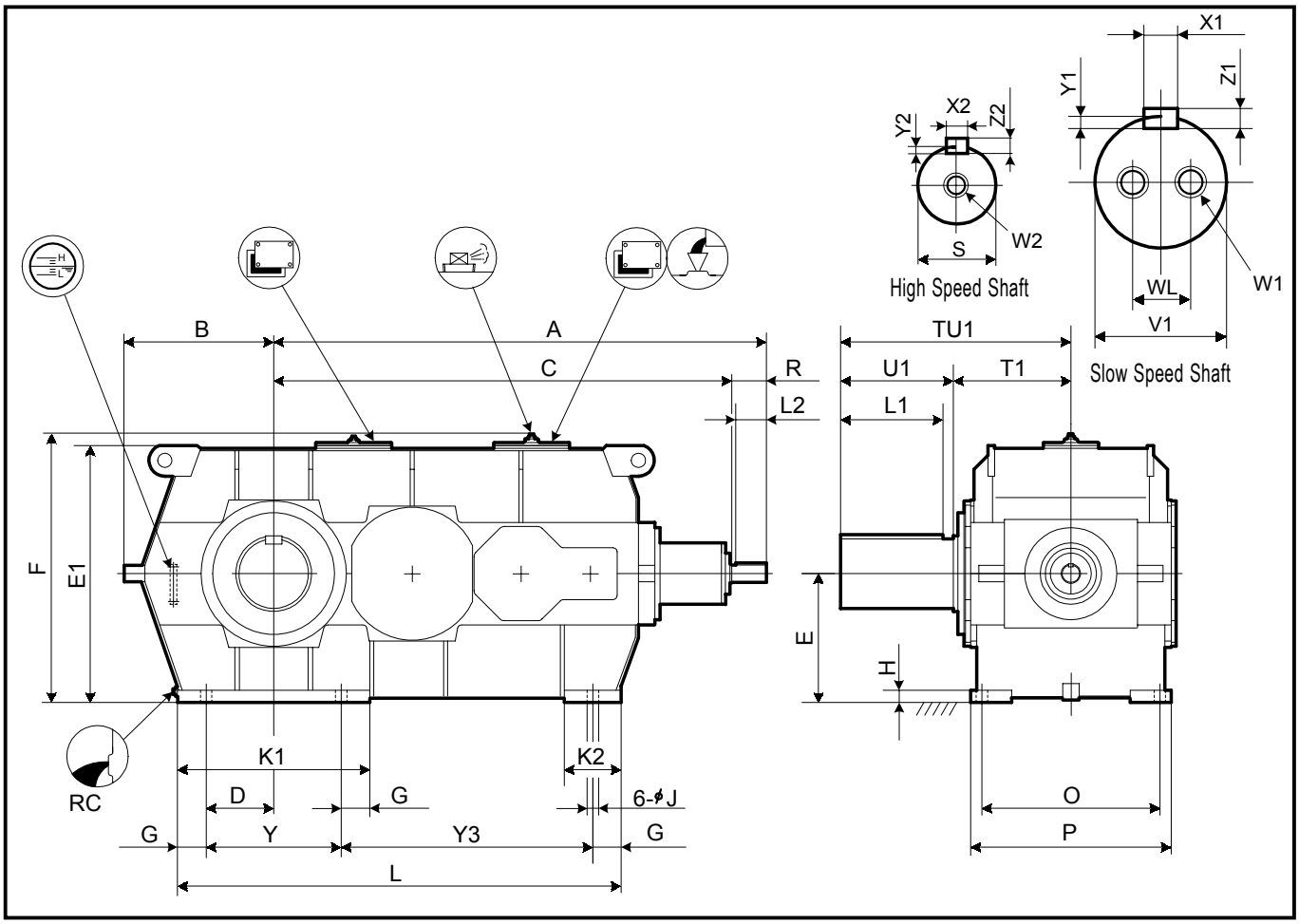

Size	A	B	C	D	E	E1	F	G	H	J	K1	K2	L	M	O	P	Y	Y3
9128	2163	680	2023	330	600	1194	1241	140	55	66	940	280	1990	170	710	840	660	1050
9131	2410	730	2240	330	630	1256	1303	140	60	66	940	280	2170	200	850	980	660	1230
9136	2410	730	2240	330	630	1256	1303	140	60	66	940	280	2170	200	850	980	660	1230

Size	High Speed Shaft							RC	Wt. kg	Oil Qty. L
	R	S	W2/Depth	Key						
				X2	Y2	Z2	L2			
9128	140	75m6	M20/42	20	7.5	12	125	1 1/2"	7400	460
9131	170	85m6	M20/42	22	9	14	150	1 1/2"	9850	680
9136	170	85m6	M20/42	22	9	14	150	1 1/2"	10200	660

Size	Slow Speed Shaft									
	TU1	T1	U1	V1	W1/Depth	WL	Key			
							X1	Y1	Z1	L1
9128	950	480	470	320m6	M36/70	200	70	22	36	425
9131	1100	550	550	340m6	M36/70	215	80	25	40	500
9136	1110	560	550	360m6	M36/70	230	80	25	40	500

1.Key and keyways are based on ISO R773-1969 Close keys(JIS B1301-1996 Parallel key in fastening type)
2.The oil quantity is approximate.Oil shall be supplied within the range shown on the oil gauge.
3. Consult us for dimensions not shown in these drawings.

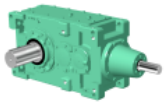

Standard Shaft Arrangement Configuration

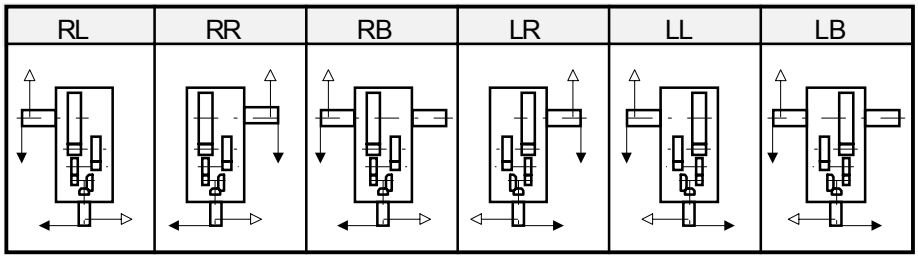

Nomenclature

P H D [ ] R 4 A - [ ] - [ ]

Size: 9128, 9131, 9136

Shaft Arrangement: RL, RR, RB, LR, LL, LB

Nominal Reduction Ratio

Size	71	80	90	100	112	125	140	160	180	200	224	250	280	315	355
9128			O	O	O	O	O	O	O	O	O	O	O	O	O
9131	O	O	O	O	O	O	O	O	O	O	O	O	O		
9136	O	O	O	O	O	O	O	O	O	O	O	O	O		

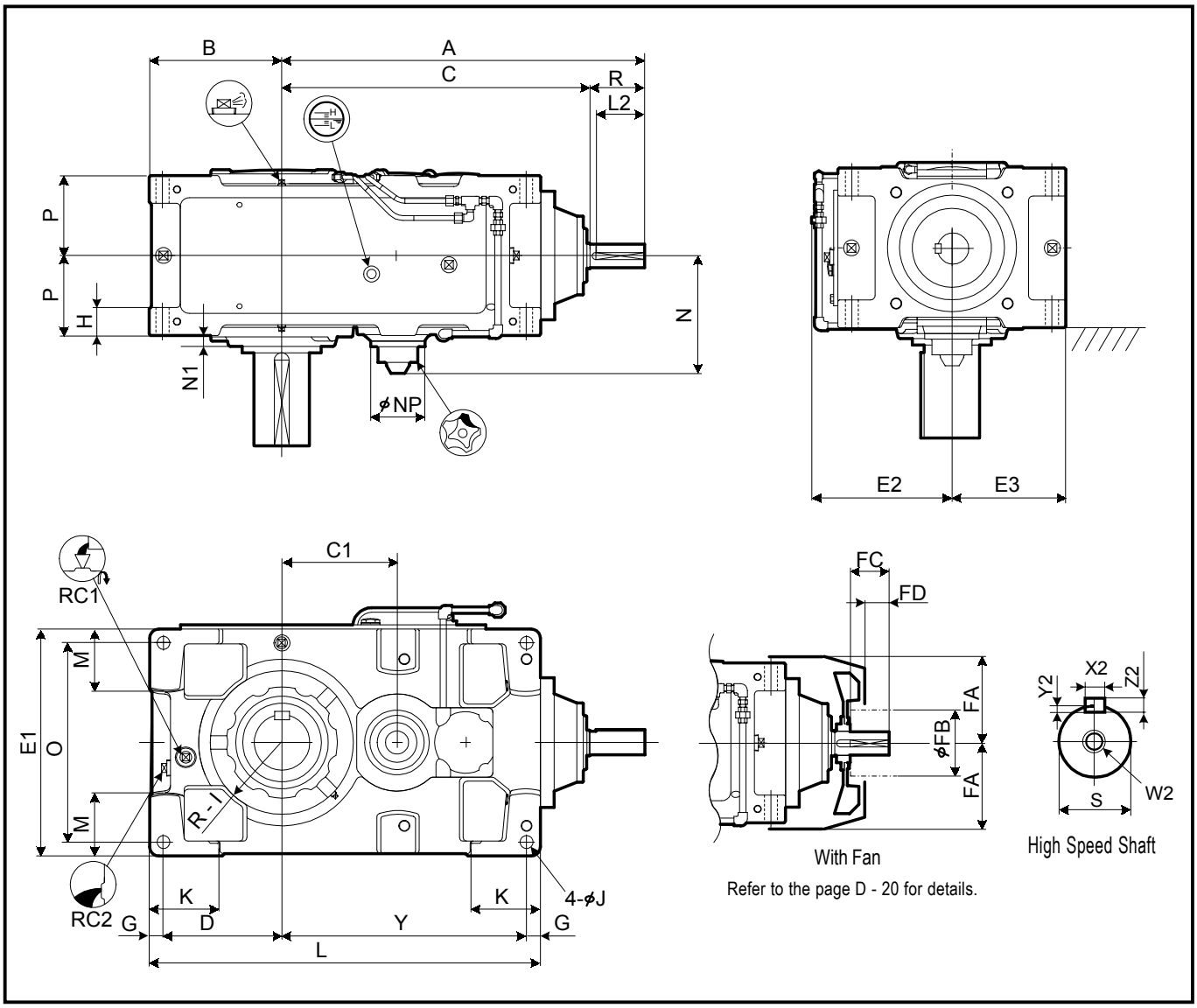

Size	A	B	C	C1	D	E1	E2	E3	G	H	I	J	K	L	M	N	N1	NP	O	P	Y
9015	507	160	427	115	140	270	195	135	20	35	80	15	95	440	70	186	25	100	230	102.5	260
9025	545	175	465	135	155	310	215	155	20	40	87.5	19	110	505	75	198	23	100	270	117.5	310
9030	645	200	535	155	175	320	220	160	25	50	105	24	120	590	85	221	22	117	270	132.5	365
9035	676	219	566	186	194	370	245	185	25	50	120	24	120	640	100	221	22	117	320	132.5	396
9040	705	235	595	180	205	400	260	200	30	60	120	28	150	685	100	239	15	117	340	157.5	420
9050	755	255	645	210	225	420	270	210	30	60	140	28	150	775	110	259	23	137	360	172.5	490
9055	794	286	684	249	256	490	305	245	30	60	155	28	150	845	135	259	23	137	430	172.5	529

Size	High Speed Shaft							Backstop				RC1	RC2	Wt. kg	Oil Qty. L
	R	S	W2/Depth	Key				FA	FB	FC	FD				
				X2	Y2	Z2	L2								
9015	80	28k6	M12/28	8	4	7	70	125	125	50	30	3/4"	3/4"	95	5
9025	80	35k6	M12/28	10	5	8	70	135	140	50	30	3/4"	3/4"	140	7
9030	110	40k6	M16/36	14	5.5	9	95	150	140	80	52	3/4"	3/4"	205	7
9035	110	40k6	M16/36	14	5.5	9	95	150	140	80	52	3/4"	3/4"	225	9
9040	110	45k6	M16/36	14	5.5	9	95	170	160	80	52	1"	1"	305	19
9050	110	50k6	M16/36	14	5.5	9	95	190	160	80	52	1"	1"	435	20
9055	110	50k6	M16/36	14	5.5	9	95	190	160	80	52	1"	1"	495	26

Units:mm

1.Key and keyways are based on ISO R773-1969 Close keys(JIS B1301-1996 Parallel key in fastening type)
2.The oil quantity is approximate.Oil shall be supplied within the range shown on the oil gauge.
3. Refer to the page D - 12 for dimensions not shown in these drawings.
4. Refer to the page D - 25 for the dimension of optional parts.

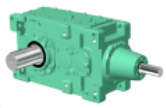

Slow Speed Shaft

Solid Shaft	Hollow Shaft (Shrink Disk Type)	Hollow Shaft (KeyType)
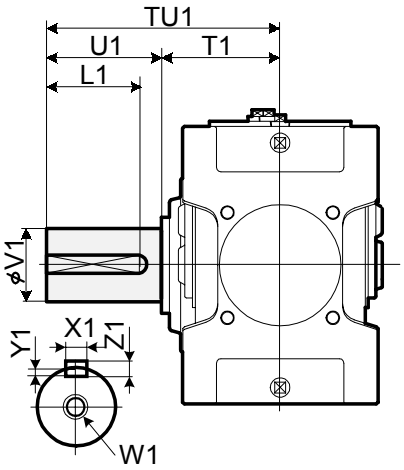	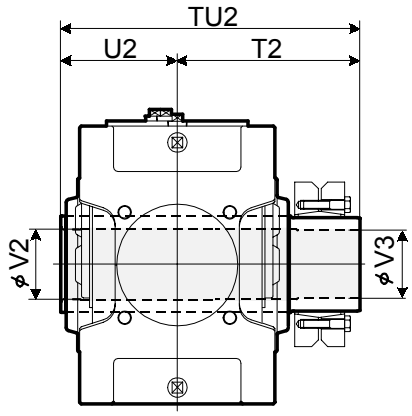 Refer to the page D - 18 for details.	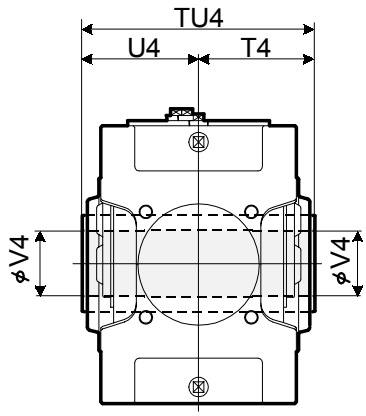 Refer to the page D - 19 for details.

Size	Solid Shaft									Hollow Shaft (Shrink Disk Type)					Hollow Shaft (Key Type)			
	TU1	T1	U1	V1	W1/Depth	Key				TU2	T2	U2	V2	V3	TU4	T4	U4	V4
						X1	Y1	Z1	L1									
9015	245	135	110	58m6	M20/42	18	7	11	95	328	193	135	63	60	270	135	135	55
9025	285	145	140	70m6	M20/42	20	7.5	12	125	358	213	145	73	70	300	150	150	65
9030	330	160	170	80m6	M20/42	22	9	14	150	393	233	160	83	80	330	165	165	75
9035	330	160	170	90m6	M20/42	25	9	14	150	403	243	160	88	85	330	165	165	85
9040	349	179	170	95m6	M24/50	25	9	14	150	448	268	180	98	95	360	180	180	90
9050	411	201	210	110m6	M24/50	28	10	16	190	503	303	200	108	105	410	205	205	105
9055	411	201	210	120m6	M24/50	32	11	18	185	528	323	205	123	120	410	205	205	115

Units:mm

Standard Shaft Arrangement Configuration

RL	RR
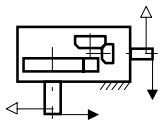	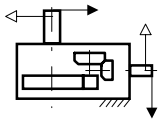

Nomenclature

P V A [ ] R 2 - [ ] [ ] [ ] - [ ]

Size: 9015, 9025, 9030, 9035, 9040, 9050, 9055

Shaft Arrangement: RL, RR

Low Speed Shaft Type:
- (blank) : Solid Shaft
- T : Hollow shaft (Shrink Disk type)
- K : Hollow shaft (Key type)

Fan:
- (blank) :Without Fan
- F :With Fan

Nominal Reduction Ratio

Size	Nominal Reduction Ratio											
	6.3	7.1	8	9	10	11.2	12.5	14	16	18	20	22.4
9015	O	O	O	O	O	O	O	O	O	O		
9025	O	O	O	O	O	O	O	O	O	O		
9030	O	O	O	O	O	O	O	O	O	O		
9035			O	O	O	O	O	O	O	O	O	O
9040	O	O	O	O	O	O	O	O	O	O		
9050	O	O	O	O	O	O	O	O	O	O		
9055				O	O	O	O	O	O	O	O	O

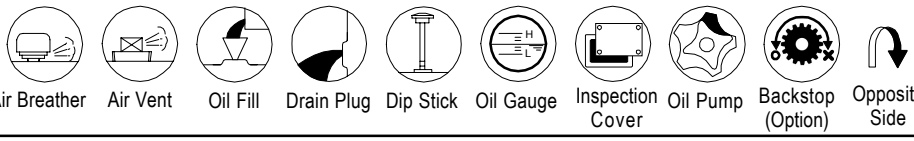

Air Breather, Air Vent, Oil Fill, Drain Plug, Dip Stick, Oil Gauge, Inspection Cover, Oil Pump, Backstop (Option), Opposite Side

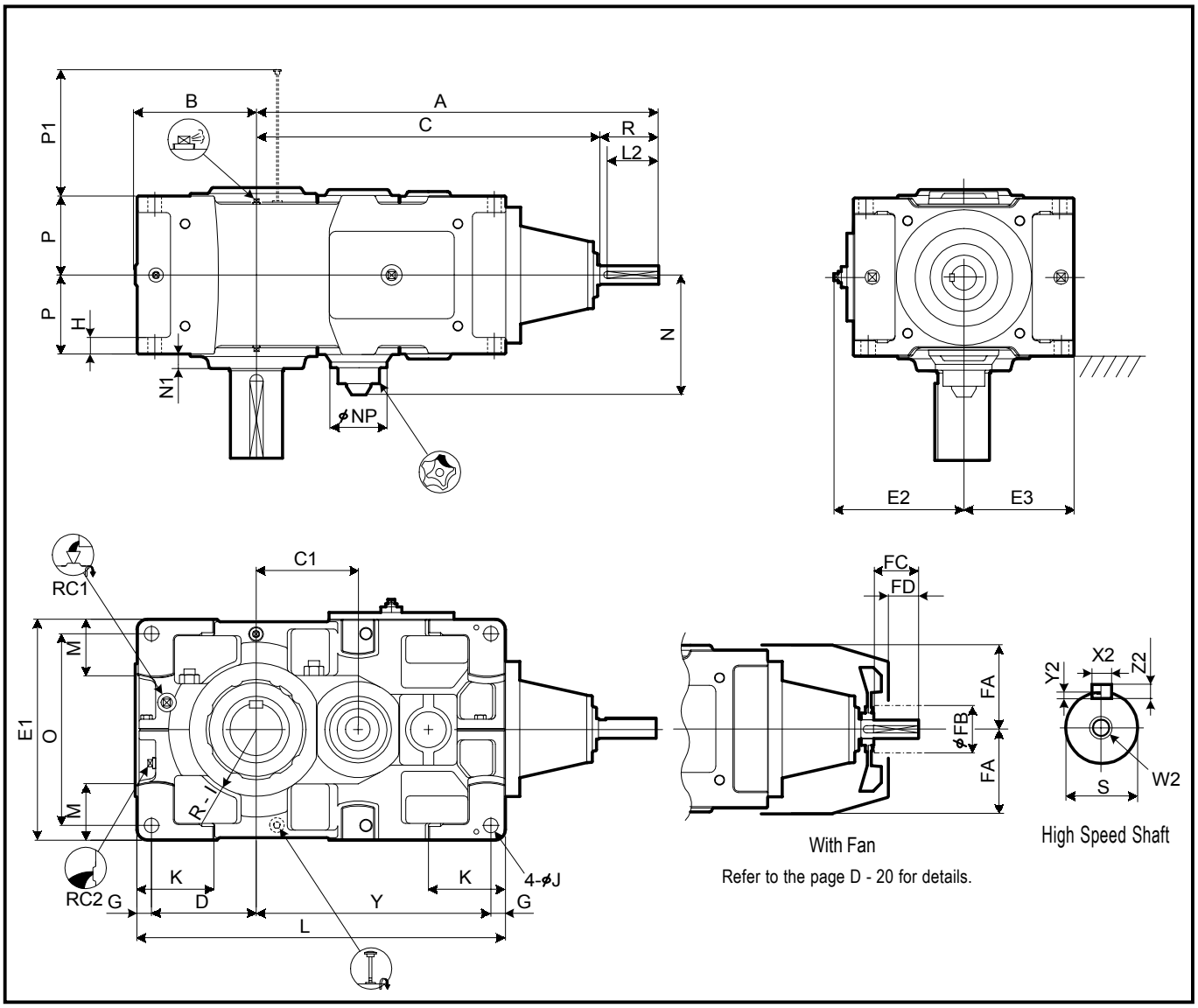

Size	A	B	C	C1	D	E1	E2	E3	G	H	I	J	K	L	M	N	N1	NP	O	P	P1	Y
9060	865	291	725	245	251	530	313	265	35	35	160	35	180	885	140	279	35	137	460	190	229	564
9070	965	328	825	285	283	600	348	300	40	40	175	42	215	1020	155	310	38	137	520	215	262	657
9075	1018	375	878	338	330	670	383	335	40	52	190	42	220	1120	195	310	40	137	590	215	262	710
9080	1080	370	940	330	325	670	383	335	40	52	190	42	220	1155	170	330	45	137	590	230	295	750
9085	1136	414	996	386	369	750	423	375	40	52	215	42	220	1255	210	330	40	137	670	230	295	806

Size	High Speed Shaft							Fan				RC1	RC2	Wt. kg	Oil Qty. L
	R	S	W2/Depth	Key				FA	FB	FC	FD				
				X2	Y2	Z2	L2								
9060	140	60m6	M20/42	18	7	11	125	220	160	105	65	1"	1"	600	25
9070	140	65m6	M20/42	18	7	11	125	245	200	105	65	1"	1"	920	35
9075	140	65m6	M20/42	18	7	11	125	245	200	105	65	1"	1"	1170	47
9080	140	75m6	M20/42	20	7.5	12	125	270	225	105	60	1"	1"	1300	46
9085	140	75m6	M20/42	20	7.5	12	125	270	225	105	60	1"	1"	1560	58

Units:mm

1.Key and keyways are based on ISO R773-1969 Close keys(JIS B1301-1996 Parallel key in fastening type)
2.The oil quantity is approximate.Oil shall be supplied within the range shown on the oil gauge.
3. Refer to the page D - 14 for dimensions not shown in these drawings.
4. Refer to the page D - 28 for the dimension of optional parts.

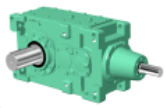

Slow Speed Shaft

Solid Shaft	Hollow Shaft (Shrink Disk Type)	Hollow Shaft (KeyType)
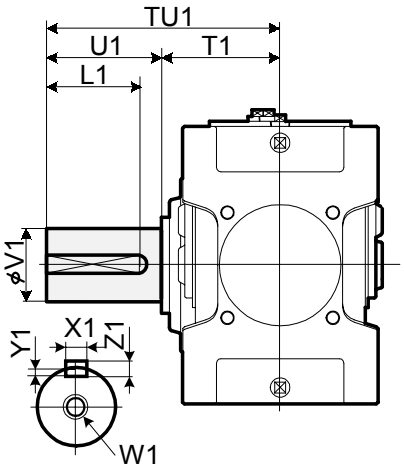	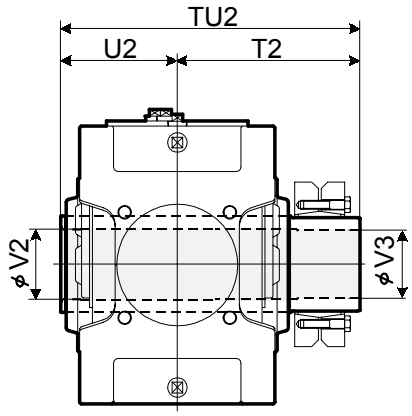 Refer to the page D - 18 for details.	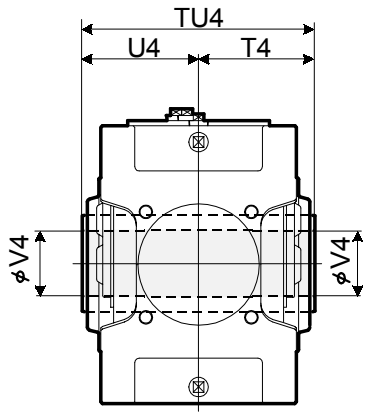 Refer to the page D - 19 for details.

Size	Solid Shaft									Hollow Shaft (Shrink Disk Type)					Hollow Shaft (Key Type)			
	TU1	T1	U1	V1	W1/Depth	Key				TU2	T2	U2	V2	V3	TU4	T4	U4	V4
						X1	Y1	Z1	L1									
9060	440	230	210	125m6	M24/50	32	11	18	185	583	353	230	128	125	470	235	235	125
9070	509	259	250	145m6	M30/60	36	12	20	225	644	384	260	148	145	530	265	265	145
9075	562	262	300	160m6	M30/60	40	13	22	275	651	386	265	158	155	530	265	265	150
9080	582	282	300	165m6	M30/60	40	13	22	275	714	429	285	173	170	570	285	285	165
9085	585	285	300	175m6	M30/60	45	15	25	270	714	429	285	183	180	570	285	285	175

Units:mm

Standard Shaft Arrangement Configuration

RL	RR
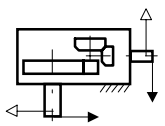	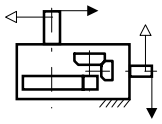

Nomenclature

P V D [ ] R 2 - [ ] [ ] [ ] - [ ]

Size: 9060, 9070, 9075, 9080, 9085

Shaft Arrangement: RL, RR

Low Speed Shaft Type:
(blank) : Solid Shaft
T : Hollow shaft (Shrink Disk type)
K : Hollow shaft (Key type)

Fan:
(blank) :Without Fan
F :With Fan

Nominal Reduction Ratio

Size	Nominal Reduction Ratio											
	6.3	7.1	8	9	10	11.2	12.5	14	16	18	20	22.4
9060	O	O	O	O	O	O	O	O	O	O		
9070	O	O	O	O	O	O	O	O	O	O		
9075				O	O	O	O	O	O	O	O	O
9080	O	O	O	O	O	O	O	O	O	O		
9085					O	O	O	O	O	O	O	O

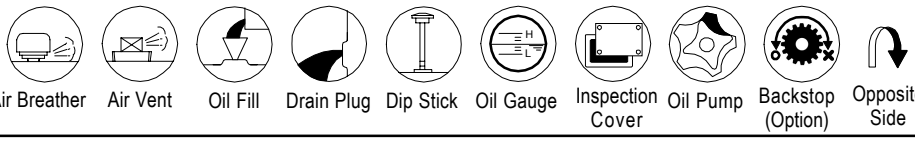

Air Breather, Air Vent, Oil Fill, Drain Plug, Dip Stick, Oil Gauge, Inspection Cover, Oil Pump, Backstop (Option), Opposite Side

Sumitomo Heavy Industries, Ltd.
http://www.shi.co.jp/ptc

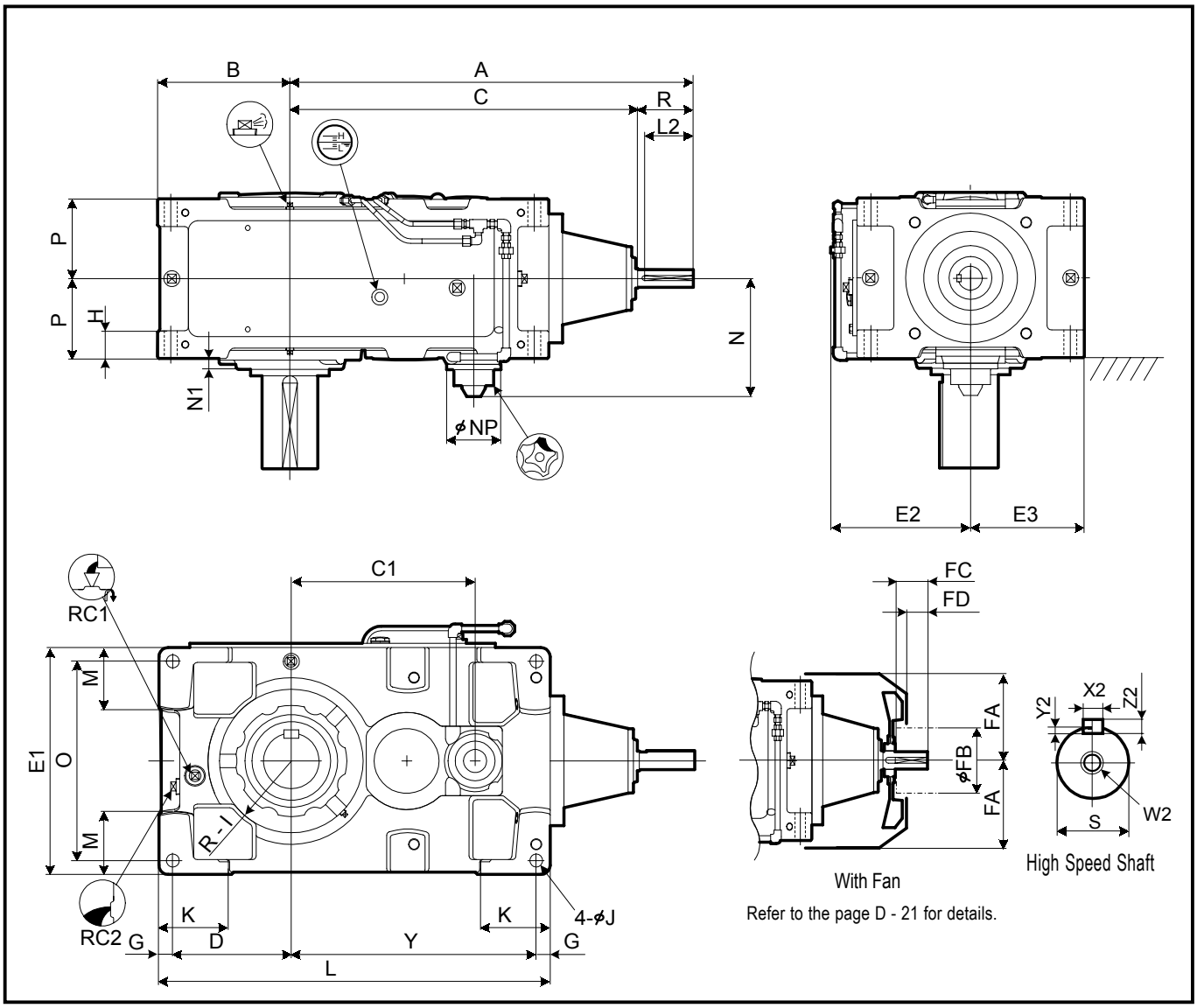

Size	A	B	C	C1	D	E1	E2	E3	G	H	I	J	K	L	M	N	N1	NP	O	P	Y
9030	656	200	576	264	175	320	220	160	25	50	105	24	120	590	85	208	22	100	270	132.5	365
9035	687	219	607	295	194	370	245	185	25	50	120	24	120	640	100	208	22	100	320	132.5	396
9040	716	235	636	306	205	400	260	200	30	60	120	28	150	685	100	239	15	117	340	157.5	420
9050	808	255	728	358	225	420	270	210	30	60	140	28	150	775	110	255	23	117	360	172.5	490
9055	847	286	767	397	256	490	305	245	30	60	155	28	150	845	135	255	23	117	430	172.5	529

Size	High Speed Shaft							Fan				RC1	RC2	Wt. kg	Oil Qty. L
	R	S	W2/Depth	Key				FA	FB	FC	FD				
				X2	Y2	Z2	L2								
9030	80	28k6	M10/22	8	4	7	70	150	125	50	30	3/4"	3/4"	210	9
9035	80	28k6	M10/22	8	4	7	70	150	125	50	30	3/4"	3/4"	230	12
9040	80	30k6	M10/22	8	4	7	70	170	125	50	30	1"	1"	305	18
9050	80	35k6	M12/28	10	5	8	70	190	140	50	22	1"	1"	445	21
9055	80	35k6	M12/28	10	5	8	70	190	140	50	22	1"	1"	505	30

Units:mm

1.Key and keyways are based on ISO R773-1969 Close keys(JIS B1301-1996 Parallel key in fastening type)
2.The oil quantity is approximate.Oil shall be supplied within the range shown on the oil gauge.
3. Refer to the page D - 12 for dimensions not shown in these drawings.
4. Refer to the page D - 25 for the dimension of optional parts.

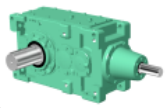

Slow Speed Shaft

Solid Shaft	Hollow Shaft (Shrink Disk Type)	Hollow Shaft (KeyType)
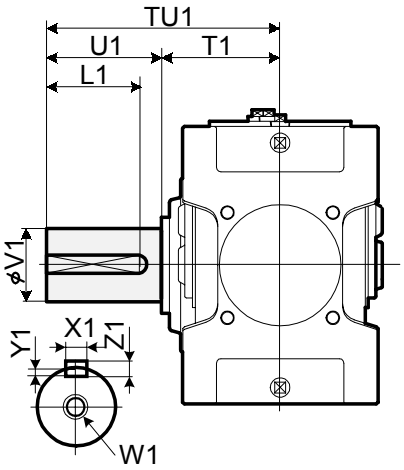	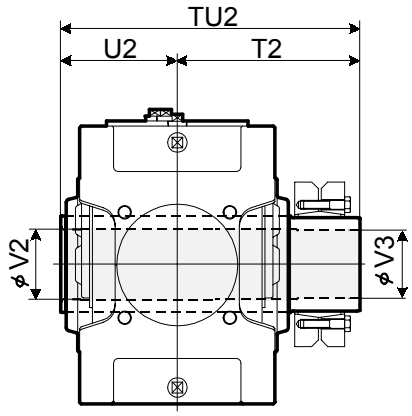 Refer to the page D - 18 for details.	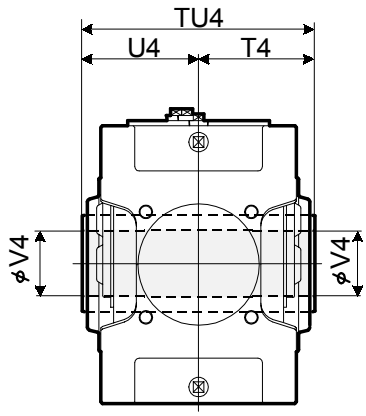 Refer to the page D - 19 for details.

Size	Solid Shaft									Hollow Shaft (Shrink Disk Type)					Hollow Shaft (Key Type)			
	TU1	T1	U1	V1	W1/Depth	Key				TU2	T2	U2	V2	V3	TU4	T4	U4	V4
						X1	Y1	Z1	L1									
9030	330	160	170	80m6	M20/42	22	9	14	150	393	233	160	83	80	330	165	165	75
9035	330	160	170	90m6	M20/42	25	9	14	150	403	243	160	88	85	330	165	165	85
9040	349	179	170	95m6	M24/50	25	9	14	150	448	268	180	98	95	360	180	180	90
9050	411	201	210	110m6	M24/50	28	10	16	190	503	303	200	108	105	410	205	205	105
9055	411	201	210	120m6	M24/50	32	11	18	185	528	323	205	123	120	410	205	205	115

Units:mm

Standard Shaft Arrangement Configuration

RL	RR
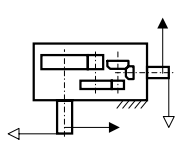	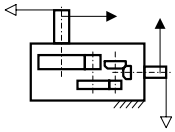

Nomenclature

P V A [ ] R 3 - [ ] [ ] [ ] - [ ]

Size: 9030, 9035, 9040, 9050, 9055

Shaft Arrangement: RL, RR

Low Speed Shaft Type:
- (blank) : Solid Shaft
- T : Hollow shaft (Shrink Disk type)
- K : Hollow shaft (Key type)

Fan:
- (blank) :Without Fan
- F :With Fan

Nominal Reduction Ratio

Size	Nominal Reduction Ratio													
	20	22.4	25	28	31.5	35.5	40	45	50	56	63	71	80	90
9030	O	O	O	O	O	O	O	O	O	O	O	O		
9035			O	O	O	O	O	O	O	O		O	O	O
9040	O	O	O	O	O	O	O	O		O	O	O		
9050	O	O	O	O	O	O	O	O	O	O	O	O		
9055			O	O	O	O	O	O	O	O	O	O	O	O

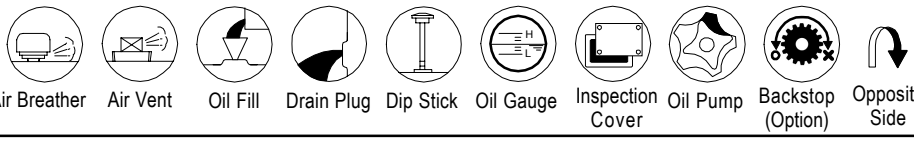

Air Breather, Air Vent, Oil Fill, Drain Plug, Dip Stick, Oil Gauge, Inspection Cover, Oil Pump, Backstop (Option), Opposite Side

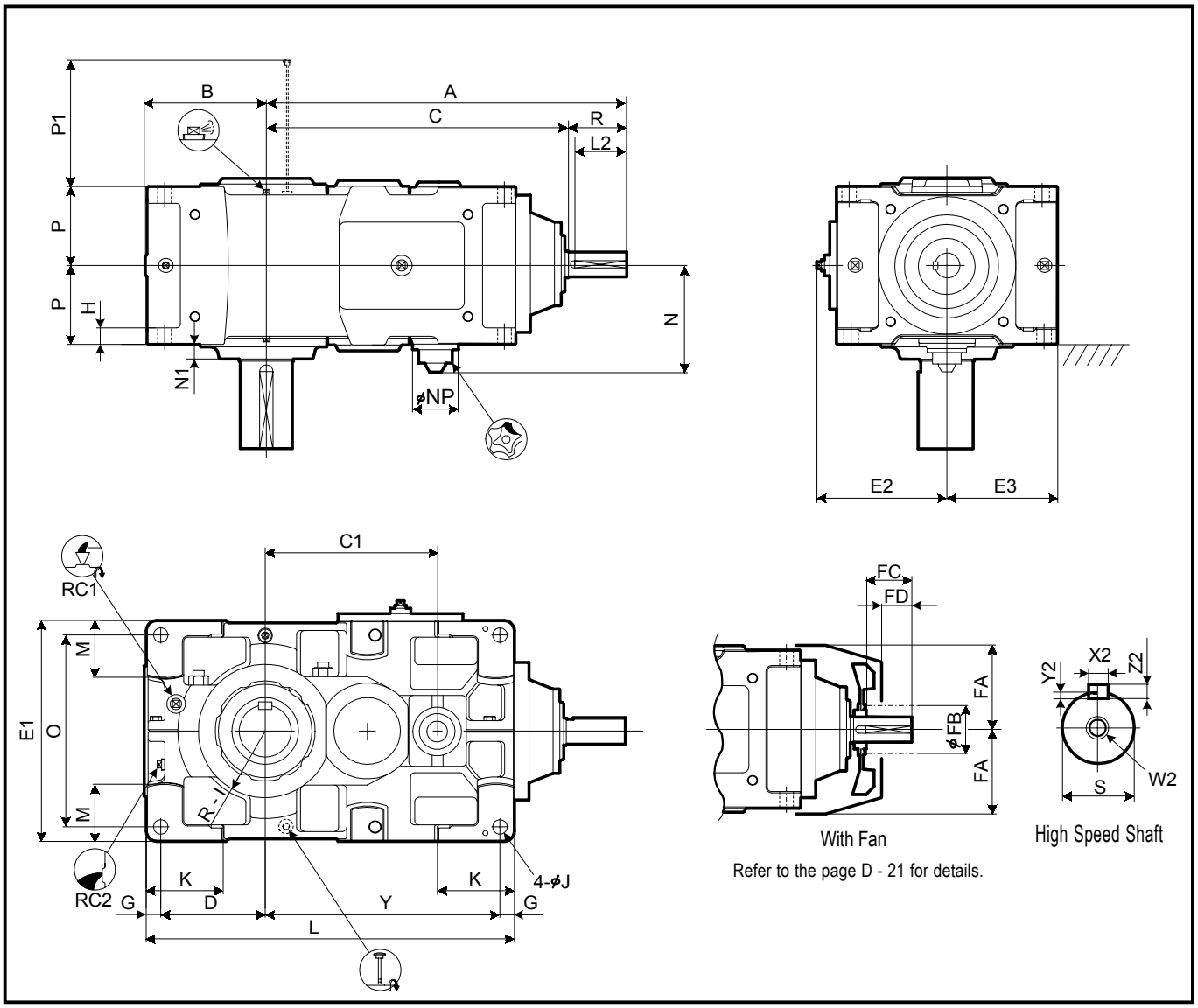

Size	A	B	C	C1	D	E1	E2	E3	G	H	I	J	K	L	M	N	N1	NP	O	P	P1	Y
9060	939	291	829	414	251	530	313	265	35	35	160	35	180	885	140	275	35	117	460	190	213	564
9070	1027	328	917	482	283	600	348	300	40	40	175	42	215	1020	155	300	38	117	520	215	233	657
9075	1080	375	970	535	330	670	383	335	40	52	190	42	220	1120	195	300	40	117	590	215	233	710
9080	1176	370	1036	556	325	670	383	335	40	52	190	42	220	1155	170	320	45	117	590	230	268	750
9085	1232	414	1092	612	369	750	423	375	40	52	215	42	220	1255	210	320	40	117	670	230	268	806

Size	High Speed Shaft							Fan				RC1	RC2	Wt. kg	Oil Qty. L
	R	S	W2/Depth	Key				FA	FB	FC	FD				
				X2	Y2	Z2	L2								
9060	110	45k6	M16/36	14	5.5	9	95	220	160	80	52	1"	1"	660	28
9070	110	50k6	M16/36	14	5.5	9	95	245	160	80	52	1"	1"	940	46
9075	110	50k6	M16/36	14	5.5	9	95	245	160	80	52	1"	1"	1190	59
9080	140	60m6	M20/42	18	7	11	125	270	160	105	65	1"	1"	1350	60
9085	140	60m6	M20/42	18	7	11	125	270	160	105	65	1"	1"	1610	80

Units:mm

1.Key and keyways are based on ISO R773-1969 Close keys(JIS B1301-1996 Parallel key in fastening type)
2.The oil quantity is approximate.Oil shall be supplied within the range shown on the oil gauge.
3. Refer to the page D - 14 for dimensions not shown in these drawings.
4. Refer to the page D - 28 for the dimension of optional parts.

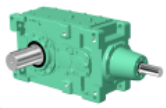

Slow Speed Shaft

Solid Shaft	Hollow Shaft (Shrink Disk Type)	Hollow Shaft (KeyType)
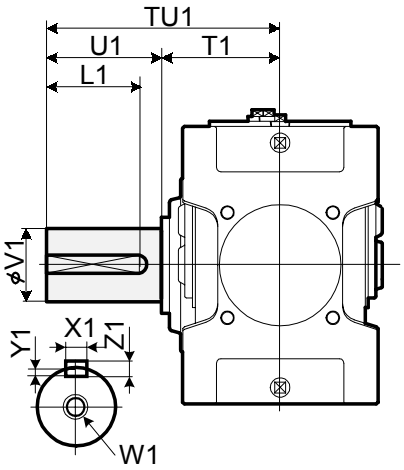	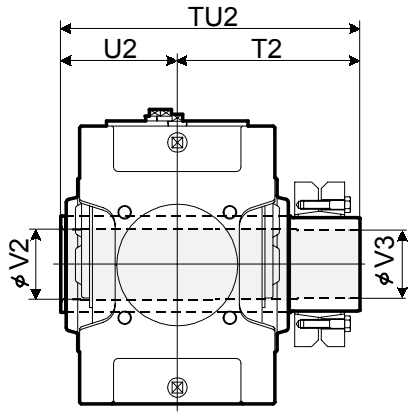 Refer to the page D - 18 for details.	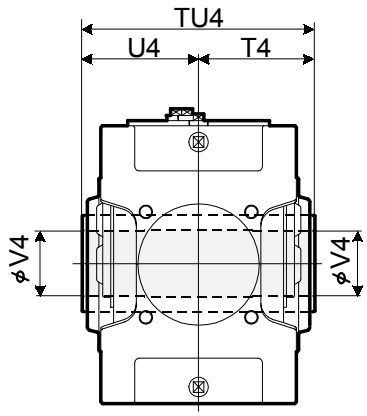 Refer to the page D - 19 for details.

Size	Solid Shaft									Hollow Shaft (Shrink Disk Type)					Hollow Shaft (Key Type)			
	TU1	T1	U1	V1	W1/Depth	Key				TU2	T2	U2	V2	V3	TU4	T4	U4	V4
						X1	Y1	Z1	L1									
9060	440	230	210	125m6	M24/50	32	11	18	185	583	353	230	128	125	470	235	235	125
9070	509	259	250	145m6	M30/60	36	12	20	225	644	384	260	148	145	530	265	265	145
9075	562	262	300	160m6	M30/60	40	13	22	275	651	386	265	158	155	530	265	265	150
9080	582	282	300	165m6	M30/60	40	13	22	275	714	429	285	173	170	570	285	285	165
9085	585	285	300	175m6	M30/60	45	15	25	270	714	429	285	183	180	570	285	285	175

Units:mm

Standard Shaft Arrangement Configuration

RL	RR
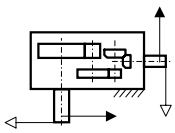	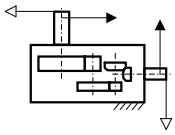

Nomenclature

P V D [Size] R 3 - [Shaft Arrangement] [Low Speed Shaft Type] [Fan] - [Nominal Reduction Ratio]

Size: 9060, 9070, 9075, 9080, 9085

Shaft Arrangement: RL, RR

Low Speed Shaft Type:
- (blank) : Solid Shaft
- T : Hollow shaft (Shrink Disk type)
- K : Hollow shaft (Key type)

Fan:
- (blank) : Without Fan
- F : With Fan

Size	Nominal Reduction Ratio													
	20	22.4	25	28	31.5	35.5	40	45	50	56	63	71	80	90
9060	O	O	O	O	O	O	O	O	O	O	O	O		
9070	O	O	O	O	O	O	O	O	O	O	O	O		
9075				O	O	O	O	O	O	O	O	O	O	O
9080	O	O	O	O	O	O	O	O	O	O	O	O		
9085			O	O	O	O	O	O	O	O	O	O	O	O

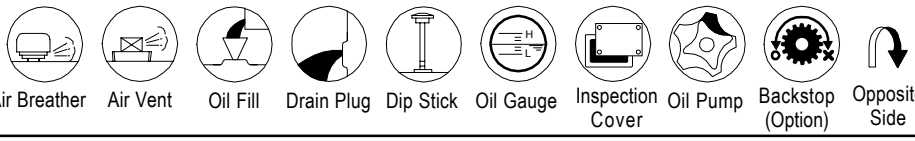

Air Breather | Air Vent | Oil Fill | Drain Plug | Dip Stick | Oil Gauge | Inspection Cover | Oil Pump | Backstop (Option) | Opposite Side

Sumitomo Heavy Industries, Ltd.
http://www.shi.co.jp/ptc

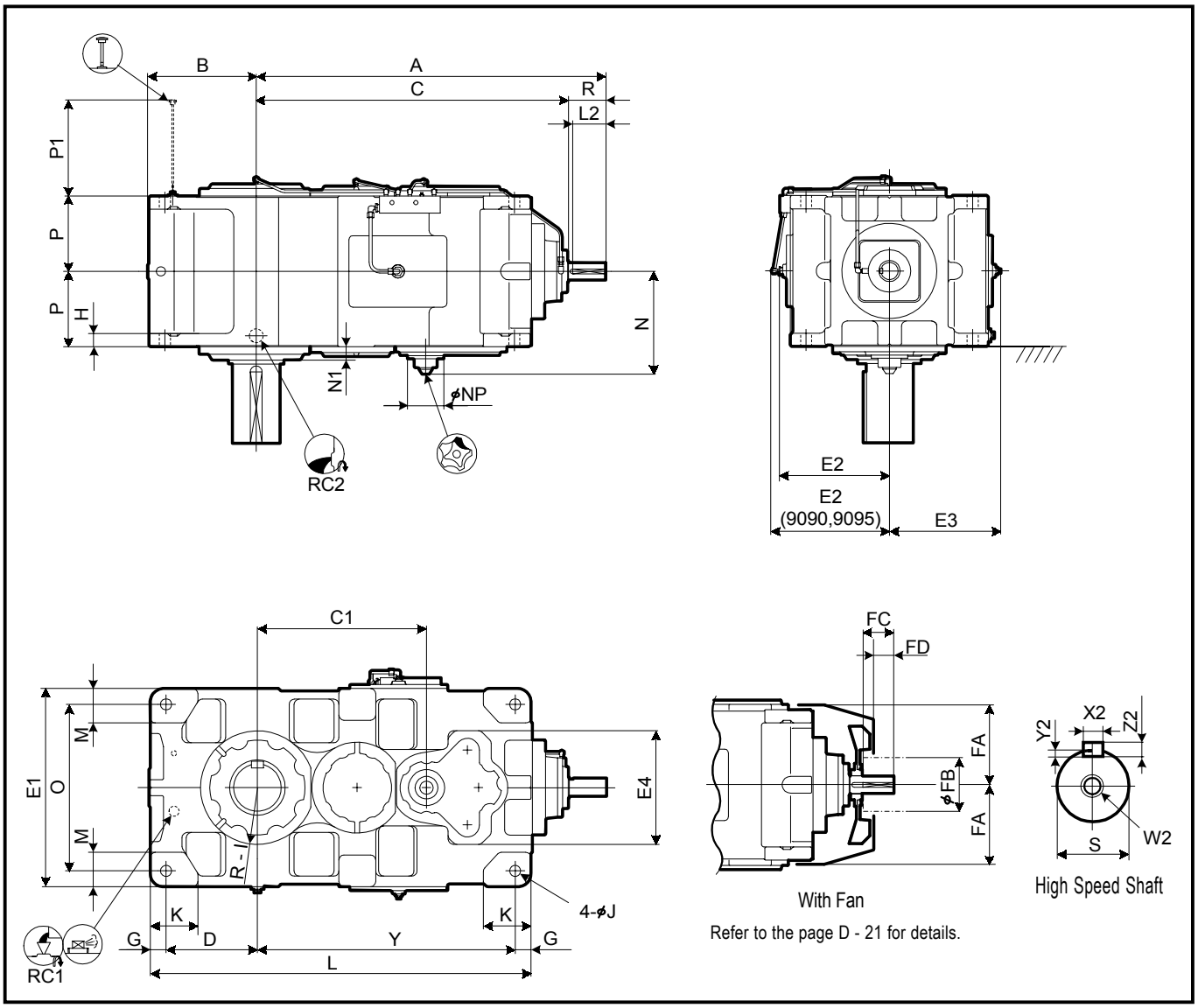

Size	A	B	C	C1	D	E1	E2	E3	E4	G	H	I	J	K	L	M	N	N1	NP	O	P	P1	Y
9090	1320	410	1180	640	345	750	449	421	430	60	50	215	42	180	1440	130	388	50	137	630	285	363	975
9095	1350	440	1210	670	375	800	474	446	430	60	50	235	42	200	1500	140	388	50	137	680	285	363	1005
9100	1474	450	1334	-	375	850	471	471	500	70	55	235	48	200	1610	150	-	60	-	710	325	411	1095
9105	1508	485	1368	-	410	900	496	496	500	70	55	260	48	220	1680	160	-	60	-	760	325	411	1130
9110	1684	500	1514	-	420	950	521	521	500	75	60	265	56	220	1810	170	-	55	-	800	355	446	1240
9115	1733	550	1563	-	470	1000	546	546	500	75	60	280	56	250	1910	180	-	55	-	850	355	446	1290

Size	High Speed Shaft							Fan				RC1	RC2	Wt. kg	Oil Qty. L
	R	S	W2/Depth	Key				FA	FB	FC	FD				
				X2	Y2	Z2	L2								
9090	140	65m6	M20/42	18	7	11	125	340	200	105	65	1"	1 1/2"	2170	120
9095	140	65m6	M20/42	18	7	11	125	340	200	105	65	1"	1 1/2"	2430	145
9100	140	75m6	M20/42	20	7.5	12	125	380	225	105	60	1"	1 1/2"	2970	170
9105	140	75m6	M20/42	20	7.5	12	125	380	225	105	60	1"	1 1/2"	3450	210
9110	170	85m6	M20/42	22	9	14	140	410	225	135	90	1"	1 1/2"	4150	230
9115	170	85m6	M20/42	22	9	14	140	410	225	135	90	1"	1 1/2"	4670	290

Units:mm

1.Key and keyways are based on ISO R773-1969 Close keys(JIS B1301-1996 Parallel key in fastening type)
2.The oil quantity is approximate.Oil shall be supplied within the range shown on the oil gauge.
3. Refer to the page D - 16 for dimensions not shown in these drawings.
4. Refer to the page D - 31 for the dimension of optional parts.

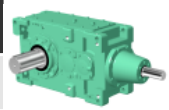

Slow Speed Shaft

Solid Shaft	Hollow Shaft (Shrink Disk Type)
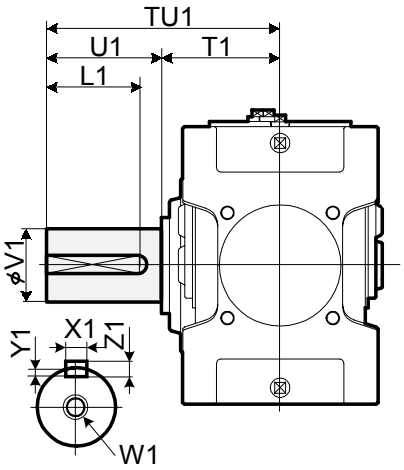	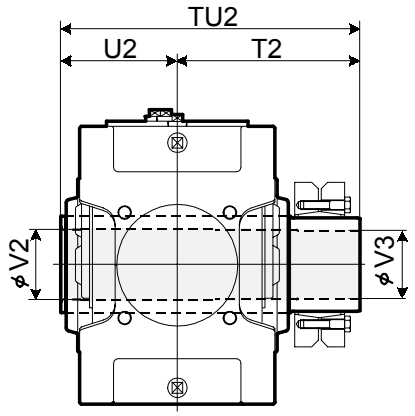 Refer to the page D - 18 for details

Size	Solid Shaft									Hollow Shaft (Shrink Disk Type)				
	TU1	T1	U1	V1	W1/Depth	Key				TU2	T2	U2	V2	V3
						X1	Y1	Z1	L1					
9090	650	350	300	180m6	M30/60	45	15	25	270	844	494	350	193	190
9095	700	350	350	190m6	M30/60	45	15	25	320	859	509	350	203	200
9100	740	390	350	200m6	M30/60	45	15	25	320	934	544	390	213	210
9105	740	390	350	220m6	M30/60	50	17	28	320	949	559	390	223	220
9110	770	420	350	220m6	M30/60	50	17	28	320	1030	610	420	243	240
9115	830	420	410	240m6	M30/60	56	20	32	375	1065	645	420	253	250

Units:mm

Standard Shaft Arrangement Configuration

RL	RR
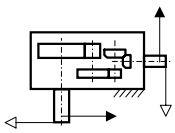	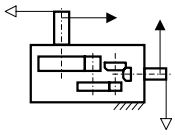

Nomenclature

P V D [ ] R 3 - [ ] [ ] [ ] - [ ]

Size: 9090, 9095, 9100, 9105, 9110, 9115

Shaft Arrangement: RL, RR

Low Speed Shaft Type: (blank) : Solid Shaft; T : Hollow shaft (Shrink Disk type)

Fan: (blank) :Without Fan; F :With Fan

Nominal Reduction Ratio

Size	Nominal Reduction Ratio													
	20	22.4	25	28	31.5	35.5	40	45	50	56	63	71	80	90
9090	O	O	O	O	O	O	O	O	O	O	O	O	O	
9095		O	O	O	O	O	O	O	O	O	O	O	O	O
9100	O	O	O	O	O	O	O	O	O	O	O	O	O	
9105		O	O	O	O	O	O	O	O	O	O	O	O	O
9110	O	O	O	O	O	O	O	O	O	O	O	O	O	
9115		O	O	O	O	O	O	O	O	O	O	O	O	O

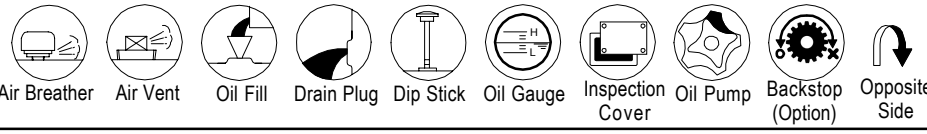

Air Breather | Air Vent | Oil Fill | Drain Plug | Dip Stick | Oil Gauge | Inspection Cover | Oil Pump | Backstop (Option) | Opposite Side

Sumitomo Heavy Industries, Ltd.
http://www.shi.co.jp/ptc

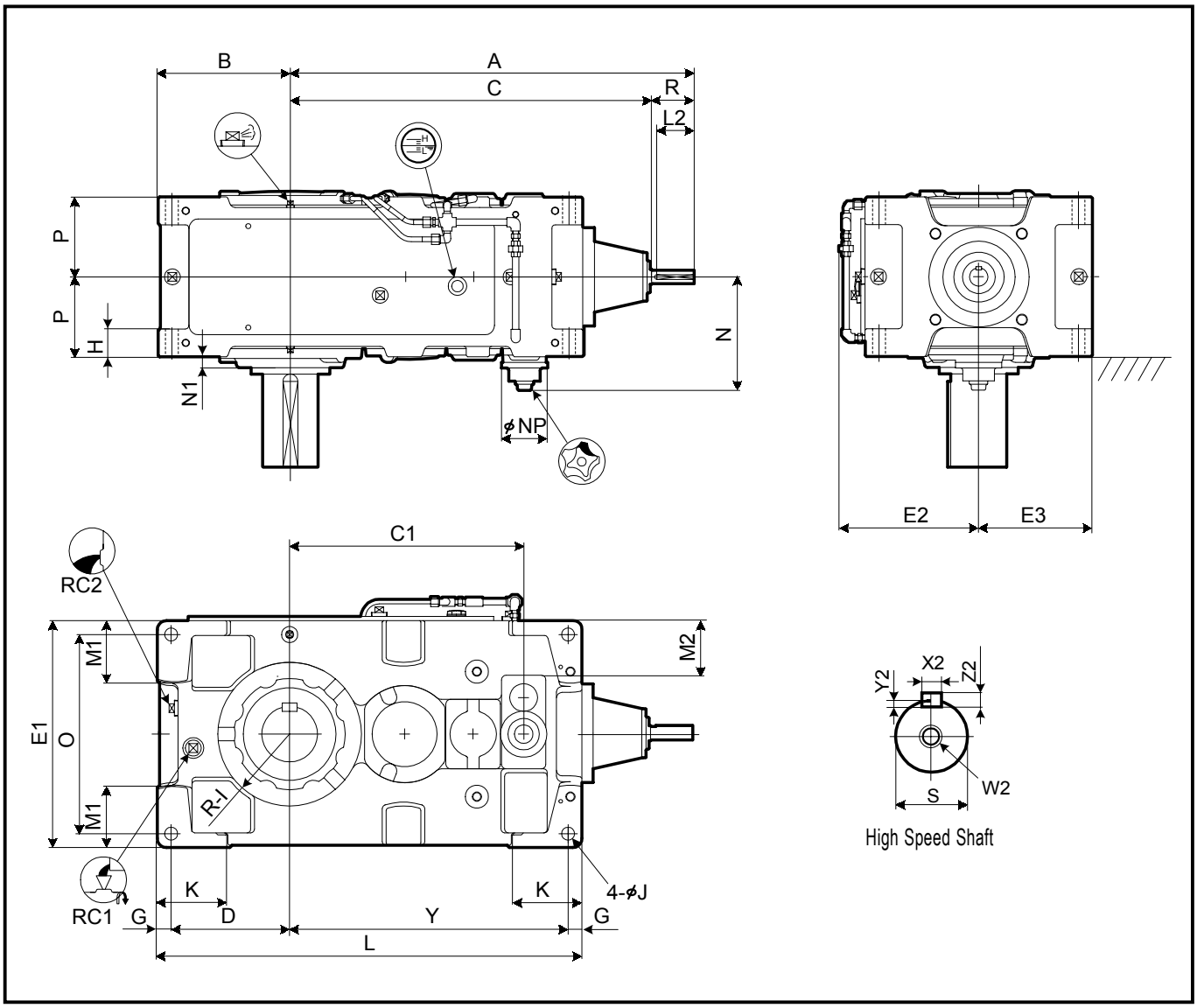

Size	A	B	C	C1	D	E1	E2	E3	G	H	I	J	K	L	M1	M2	N	N1	NP	O	P	Y
9040	770	235	690	398	205	400	260	200	30	60	120	28	150	759	100	70	225	15	100	340	157.5	494
9050	859	255	779	467	225	420	270	210	30	60	140	28	150	848	110	83	245	23	100	360	172.5	563
9055	898	286	818	506	256	490	305	245	30	60	155	28	150	918	135	118	245	23	100	430	172.5	602

Size	High Speed Shaft							RC1	RC2	Wt. kg	Oil Qty. L
	R	S	W2/Depth	Key							
				X2	Y2	Z2	L2				
9040	80	28k6	M10/22	8	4	7	70	1"	1"	325	18
9050	80	28k6	M10/22	8	4	7	70	1"	1"	460	24
9055	80	28k6	M10/22	8	4	7	70	1"	1"	520	34

Units:mm

1.Key and keyways are based on ISO R773-1969 Close keys(JIS B1301-1996 Parallel key in fastening type)
2.The oil quantity is approximate.Oil shall be supplied within the range shown on the oil gauge.
3. Refer to the page D - 13 for dimensions not shown in these drawings.
4. Refer to the page D - 25 for the dimension of optional parts.

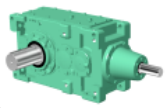

Slow Speed Shaft

Solid Shaft	Hollow Shaft (Shrink Disk Type)	Hollow Shaft (KeyType)
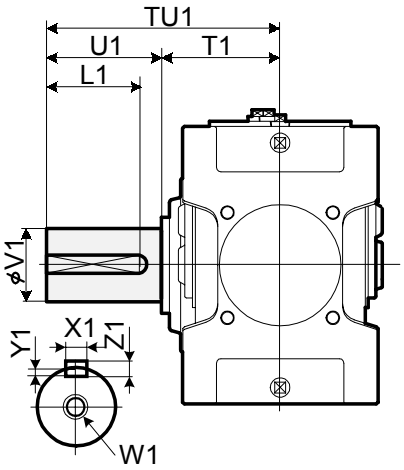	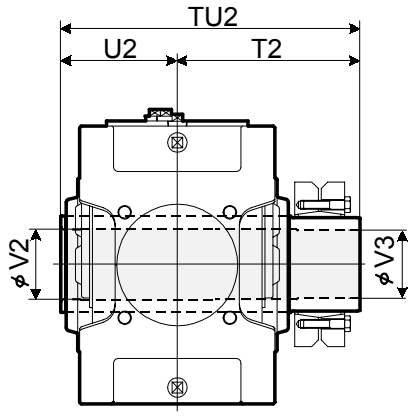 Refer to the page D - 18 for details.	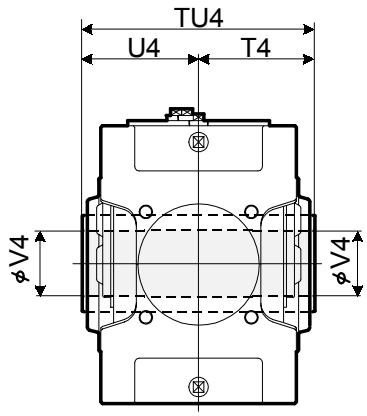 Refer to the page D - 19 for details.

Size	Solid Shaft									Hollow Shaft (Shrink Disk Type)					Hollow Shaft (Key Type)			
	TU1	T1	U1	V1	W1/Depth	Key				TU2	T2	U2	V2	V3	TU4	T4	U4	V4
						X1	Y1	Z1	L1									
9040	349	179	170	95m6	M24/50	25	9	14	150	448	268	180	98	95	360	180	180	90
9050	411	201	210	110m6	M24/50	28	10	16	190	503	303	200	108	105	410	205	205	105
9055	411	201	210	120m6	M24/50	32	11	18	185	528	323	205	123	120	410	205	205	115

Units:mm

Standard Shaft Arrangement Configuration

LR	LL
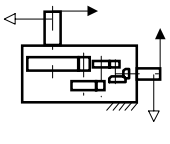	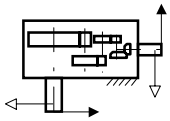

Nomenclature

P V A [ ] R 4 - [ ] [ ] - [ ]

Size: 9040, 9050, 9055

Shaft Arrangement: LR, LL

Low Speed Shaft Type:
(blank) : Solid Shaft
T : Hollow shaft (Shrink Disk type)
K : Hollow shaft (Key type)

Nominal Reduction Ratio

Size	Nominal Reduction Ratio															
	80	90	100	112	125	140	160	180	200	224	250	280	315	355	400	450
9040	O	O	O	O	O	O										
9050	O	O	O	O	O	O	O	O	O	O	O	O	O	O		
9055				O	O	O	O	O	O	O	O	O	O	O	O	O

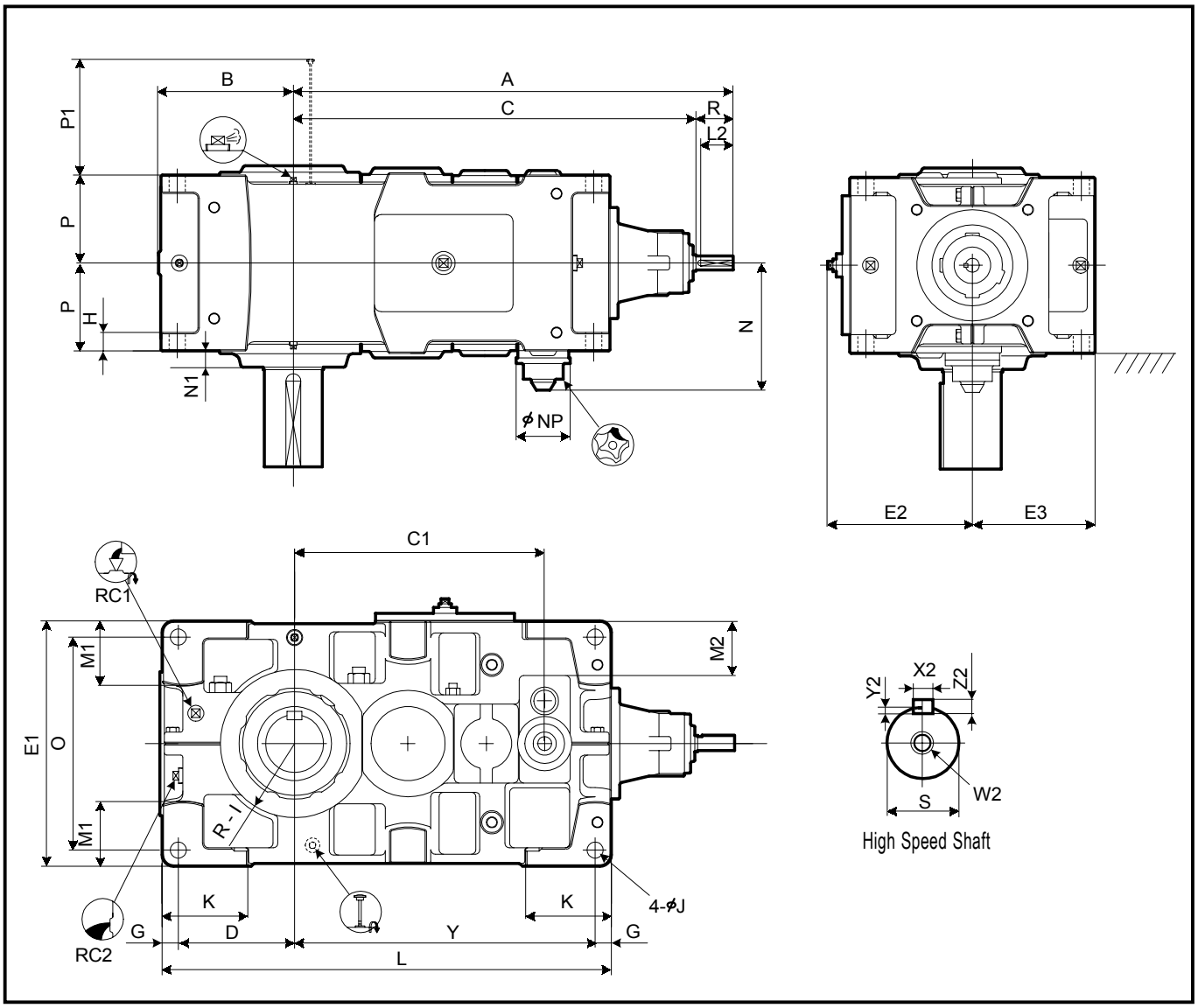

Size	A	B	C	C1	D	E1	E2	E3	G	H	I	J	K	L	M1	M2	N	N1	NP	O	P	P1	Y
9060	950	291	870	540	251	530	313	265	35	35	160	35	180	970	140	118	275	35	117	460	190	203	649
9070	1080	328	1000	630	283	600	348	300	40	40	175	42	215	1115	155	128	300	38	117	520	215	233	752
9075	1133	375	1053	683	330	670	383	335	40	52	190	42	220	1215	195	163	300	40	117	590	215	233	805
9080	1250	370	1140	725	325	670	383	335	40	52	190	42	220	1275	170	140	320	45	117	590	230	263	870
9085	1306	414	1196	781	369	750	423	375	40	52	215	42	220	1375	210	180	320	40	117	670	230	263	926

Size	High Speed Shaft							RC1	RC2	Wt.	Oil Qty.
	R	S	W2/Depth	Key							
				X2	Y2	Z2	L2			kg	L
9060	80	30k6	M10/22	8	4	7	70	1"	1"	670	36
9070	80	35k6	M12/28	10	5	8	70	1"	1"	960	54
9075	80	35k6	M12/28	10	5	8	70	1"	1"	1180	68
9080	110	45k6	M16/36	14	5.5	9	95	1"	1"	1390	69
9085	110	45k6	M16/36	14	5.5	9	95	1"	1"	1650	94

Units:mm

1.Key and keyways are based on ISO R773-1969 Close keys(JIS B1301-1996 Parallel key in fastening type)
2.The oil quantity is approximate.Oil shall be supplied within the range shown on the oil gauge.
3. Refer to the page D - 15 for dimensions not shown in these drawings.
4. Refer to the page D - 28 for the dimension of optional parts.

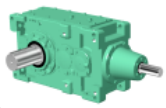

Slow Speed Shaft

Solid Shaft	Hollow Shaft (Shrink Disk Type)	Hollow Shaft (KeyType)
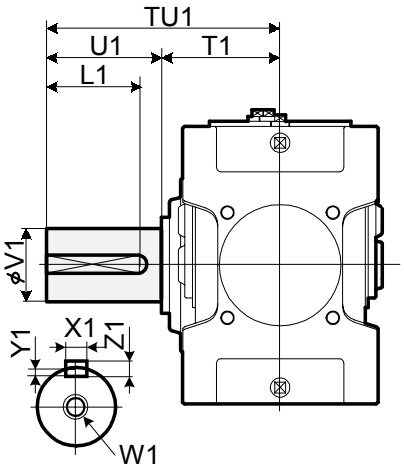	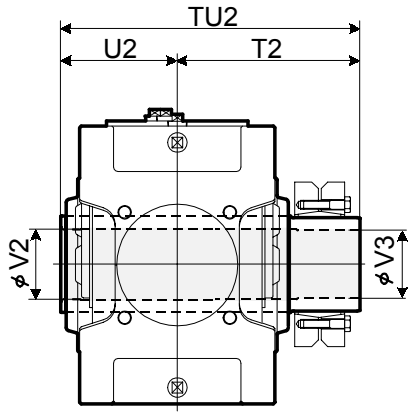 Refer to the page D - 18 for details.	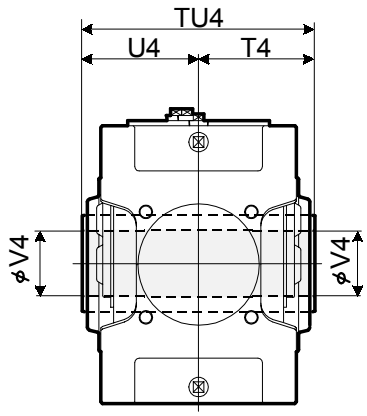 Refer to the page D - 19 for details.

Size	Solid Shaft									Hollow Shaft (Shrink Disk Type)					Hollow Shaft (Key Type)			
	TU1	T1	U1	V1	W1/Depth	Key				TU2	T2	U2	V2	V3	TU4	T4	U4	V4
						X1	Y1	Z1	L1									
9060	440	230	210	125m6	M24/50	32	11	18	185	583	353	230	128	125	470	235	235	125
9070	509	259	250	145m6	M30/60	36	12	20	225	644	384	260	148	145	530	265	265	145
9075	562	262	300	160m6	M30/60	40	13	22	275	651	386	265	158	155	530	265	265	150
9080	582	282	300	165m6	M30/60	40	13	22	275	714	429	285	173	170	570	285	285	165
9085	585	285	300	175m6	M30/60	45	15	25	270	714	429	285	183	180	570	285	285	175

Units:mm

Standard Shaft Arrangement Configuration

LR	LL
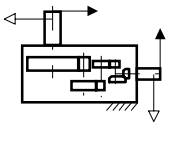	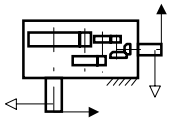

Nomenclature

P V D [ ] R 4 - [ ] [ ] - [ ]

Size: 9060, 9070, 9075, 9080, 9085

Shaft Arrangement: LR, LL

Low Speed Shaft Type:
(blank) : Solid Shaft
T : Hollow shaft (Shrink Disk type)
K : Hollow shaft (Key type)

Nominal Reduction Ratio

Size	80	90	100	112	125	140	160	180	200	224	250	280	315	355	400	450
9060		O	O	O	O	O	O	O	O	O	O	O	O	O		
9070	O	O	O	O	O	O	O	O	O	O	O	O	O	O		
9075			O	O	O	O	O	O		O	O	O	O	O	O	O
9080	O	O	O	O	O	O	O	O	O	O	O	O	O	O		
9085			O	O	O	O	O	O	O	O	O	O	O	O	O	O

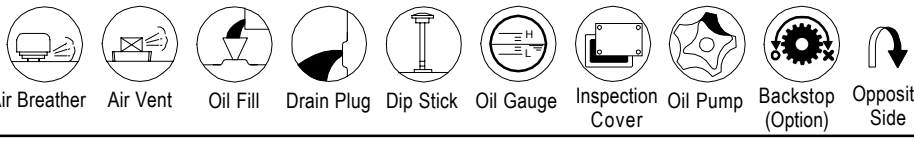

Air Breather, Air Vent, Oil Fill, Drain Plug, Dip Stick, Oil Gauge, Inspection Cover, Oil Pump, Backstop (Option), Opposite Side

Sumitomo Heavy Industries, Ltd.
http://www.shi.co.jp/ptc

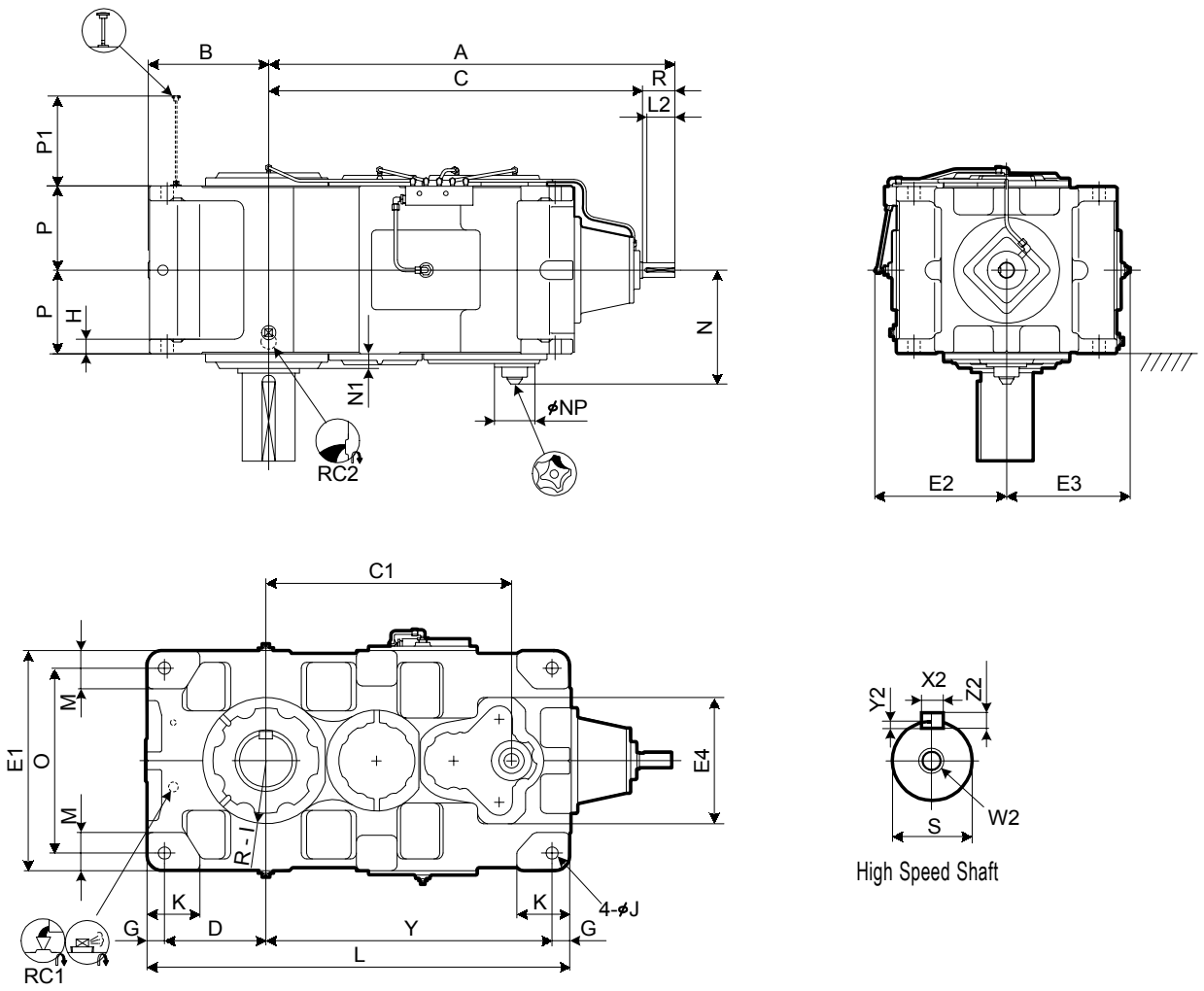

Size	A	B	C	C1	D	E1	E2	E3	E4	G	H	I	J	K	L	M	N	N1	NP	O	P	P1	Y
9090	1382	410	1272	837	345	750	449	421	430	60	50	215	42	180	1440	130	388	50	137	630	285	354	975
9095	1412	440	1302	867	375	800	474	446	430	60	50	235	42	200	1500	140	388	50	137	680	285	354	1005
9100	1570	450	1430	950	375	850	499	471	500	70	55	235	48	200	1610	150	428	60	137	710	325	399	1095
9105	1604	485	1464	984	410	900	524	496	500	70	55	260	48	220	1680	160	428	60	137	760	325	399	1130
9110	1670	500	1530	1050	420	950	559	521	500	75	60	265	56	220	1810	170	458	55	137	800	355	429	1240
9115	1719	550	1579	1099	470	1000	584	546	500	75	60	280	56	250	1910	180	458	55	137	850	355	429	1290

Size	High Speed Shaft							RC1	RC2	Wt. kg	Oil Qty. L
	R	S	W2/Depth	Key							
				X2	Y2	Z2	L2				
9090	110	50k6	M16/36	14	5.5	9	95	1"	1 1/2"	2170	120
9095	110	50k6	M16/36	14	5.5	9	95	1"	1 1/2"	2430	155
9100	140	60m6	M20/42	18	7	11	125	1"	1 1/2"	2970	180
9105	140	60m6	M20/42	18	7	11	125	1"	1 1/2"	3450	220
9110	140	60m6	M20/42	18	7	11	125	1"	1 1/2"	4100	250
9115	140	60m6	M20/42	18	7	11	125	1"	1 1/2"	4620	315

Units:mm

1.Key and keyways are based on ISO R773-1969 Close keys(JIS B1301-1996 Parallel key in fastening type)
2.The oil quantity is approximate.Oil shall be supplied within the range shown on the oil gauge.
3. Refer to the page D - 16 for dimensions not shown in these drawings.
4. Refer to the page D - 31 for the dimension of optional parts.

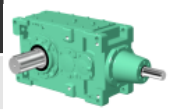

Slow Speed Shaft

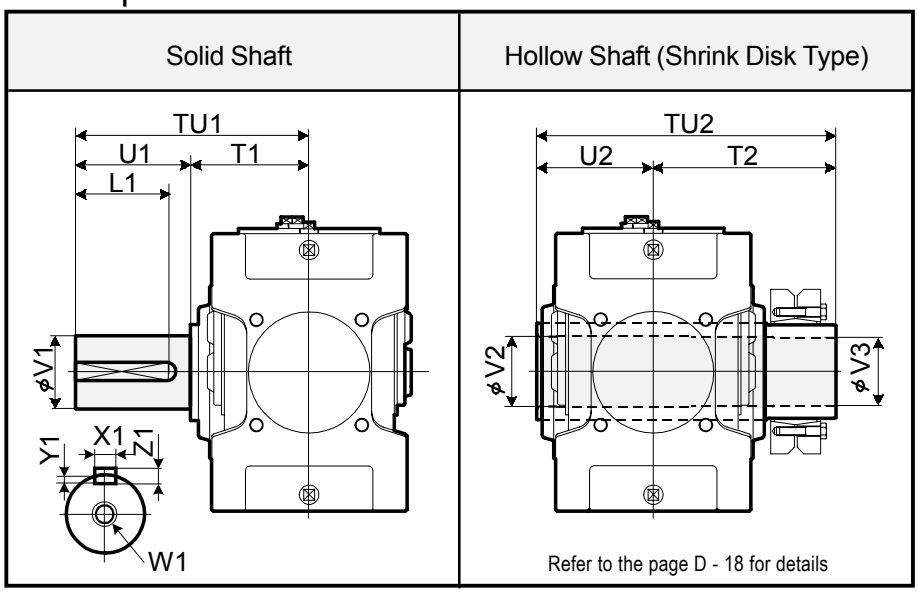

Size	Solid Shaft									Hollow Shaft (Shrink Disk Type)				
	TU1	T1	U1	V1	W1/Depth	Key				TU2	T2	U2	V2	V3
						X1	Y1	Z1	L1					
9090	650	350	300	180m6	M30/60	45	15	25	270	844	494	350	193	190
9095	700	350	350	190m6	M30/60	45	15	25	320	859	509	350	203	200
9100	740	390	350	200m6	M30/60	45	15	25	320	934	544	390	213	210
9105	740	390	350	220m6	M30/60	50	17	28	320	949	559	390	223	220
9110	770	420	350	220m6	M30/60	50	17	28	320	1030	610	420	243	240
9115	830	420	410	240m6	M30/60	56	20	32	375	1065	645	420	253	250

Units:mm

Standard Shaft Arrangement Configuration

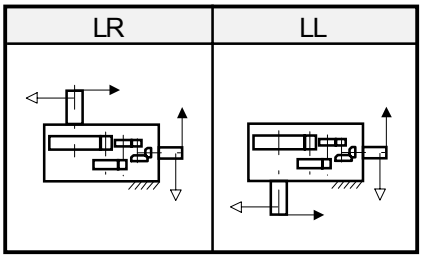

Nomenclature

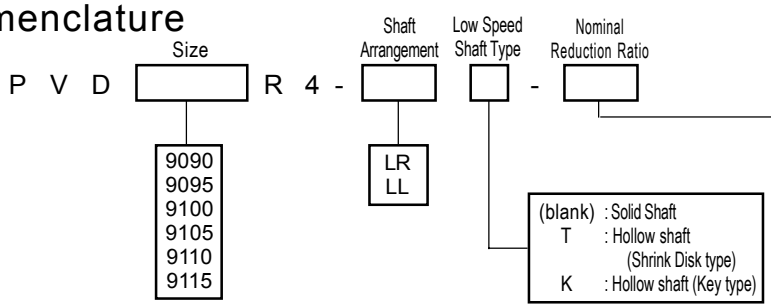

Size	Nominal Reduction Ratio													
	90	100	112	125	140	160	180	200	224	250	280	315	355	400
9090	O	O	O	O	O	O	O	O	O	O	O	O	O	
9095		O	O	O	O	O	O	O	O	O	O	O	O	O
9100	O	O	O	O	O	O	O	O	O	O	O	O	O	
9105		O	O	O	O	O	O	O	O	O	O	O	O	O
9110	O	O	O	O	O	O	O	O	O	O	O	O	O	
9115		O	O	O	O	O	O	O	O	O	O	O	O	O

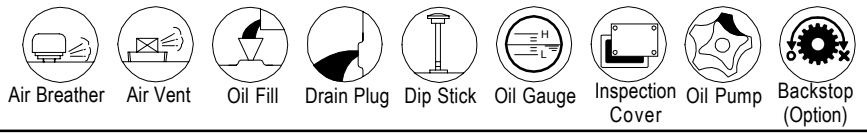

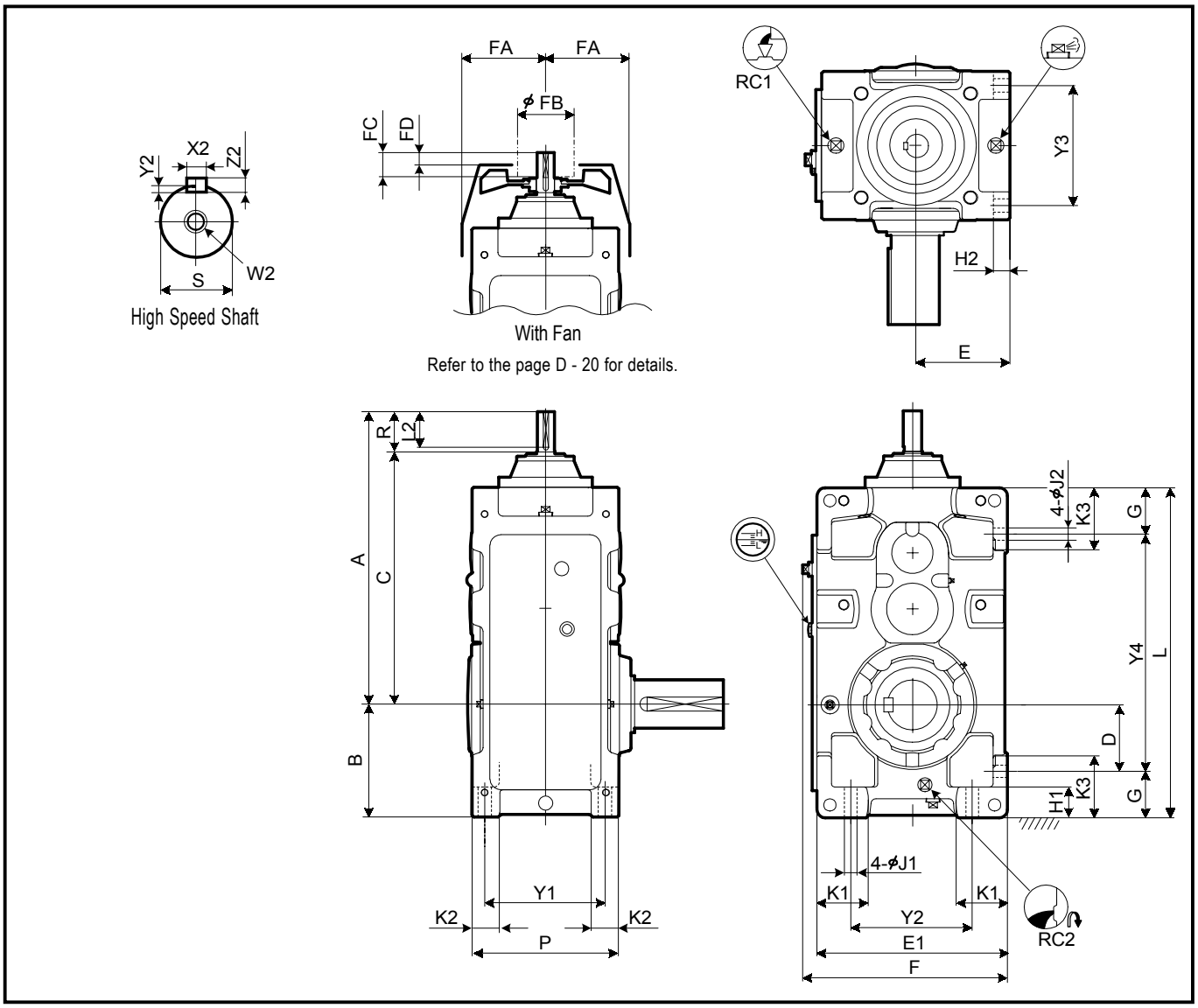

Size	A	B	C	D	E	E1	F	G	H1	H2	J1	J2	K1	K2	K3	L	P	Y1	Y2	Y3	Y4
9015	507	160	427	90	135	270	298	70	50	22	15	15	70	35	95	440	205	170	180	170	300
9025	545	175	465	95	155	310	338	80	55	25	19	19	75	40	110	505	235	195	210	195	345
9030	645	200	535	110	160	320	348	90	60	28	24	24	85	50	120	590	265	215	200	215	410
9035	676	219	566	129	185	370	398	90	60	28	24	24	100	50	120	640	265	215	250	215	460
9040	705	235	595	120	200	400	430	115	75	30	28	28	100	60	150	685	315	255	260	255	455
9050	755	255	645	138.5	210	420	450	116.5	75	32	28	28	110	60	150	775	345	285	280	285	542
9055	794	286	684	171	245	490	520	115	75	32	28	28	135	60	150	845	345	285	350	285	615

Size	High Speed Shaft							Fan				RC1	RC2	Wt. kg	Oil Qty. L
	R	S	W2/Depth	Key				FA	FB	FC	FD				
				X2	Y2	Z2	L2								
9015	80	28k6	M12/28	8	4	7	70	125	125	50	30	3/4"	3/4"	95	7
9025	80	35k6	M12/28	10	5	8	70	135	140	50	30	3/4"	3/4"	140	11
9030	110	40k6	M16/36	14	5.5	9	95	150	140	80	52	3/4"	3/4"	205	14
9035	110	40k6	M16/36	14	5.5	9	95	150	140	80	52	3/4"	3/4"	225	19
9040	110	45k6	M16/36	14	5.5	9	95	170	160	80	52	1"	1"	305	24
9050	110	50k6	M16/36	14	5.5	9	95	190	160	80	52	1"	1"	435	31
9055	110	50k6	M16/36	14	5.5	9	95	190	160	80	52	1"	1"	495	45

Units:mm

1.Key and keyways are based on ISO R773-1969 Close keys(JIS B1301-1996 Parallel key in fastening type)
2.The oil quantity is approximate.Oil shall be supplied within the range shown on the oil gauge.
3. Refer to the page D - 12 for dimensions not shown in these drawings.
4. Refer to the page D - 26 for the dimension of optional parts.

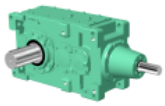

Slow Speed Shaft

Solid Shaft	Hollow Shaft (Shrink Disk Type)	Hollow Shaft (KeyType)
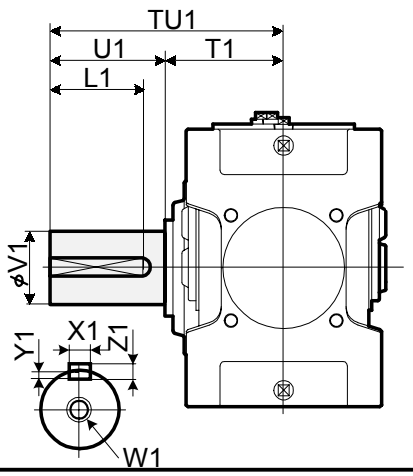	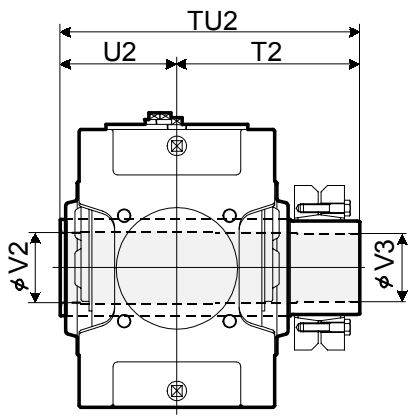 Refer to the page D-18 for details.	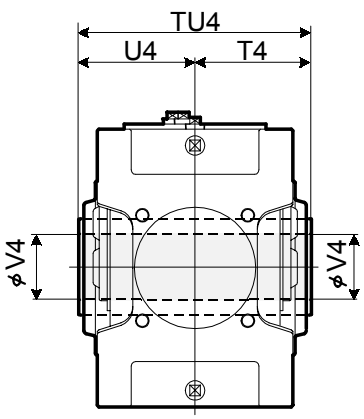 Refer to the page D -19 for details.

Size	Solid Shaft									Hollow Shaft (Shrink Disk Type)					Hollow Shaft (Key Type)			
	TU1	T1	U1	V1	W1/Depth	Key				TU2	T2	U2	V2	V3	TU4	T4	U4	V4
						X1	Y1	Z1	L1									
9015	245	135	110	58m6	M20/42	18	7	11	95	328	193	135	63	60	270	135	135	55
9025	285	145	140	70m6	M20/42	20	7.5	12	125	358	213	145	73	70	300	150	150	65
9030	330	160	170	80m6	M20/42	22	9	14	150	393	233	160	83	80	330	165	165	75
9035	330	160	170	90m6	M20/42	25	9	14	150	403	243	160	88	85	330	165	165	85
9040	349	179	170	95m6	M24/50	25	9	14	150	448	268	180	98	95	360	180	180	90
9050	411	201	210	110m6	M24/50	28	10	16	190	503	303	200	108	105	410	205	205	105
9055	411	201	210	120m6	M24/50	32	11	18	185	528	323	205	123	120	410	205	205	115

Units:mm

Standard Shaft Arrangement Configuration

RL	RR	RB	LR	LL	LB
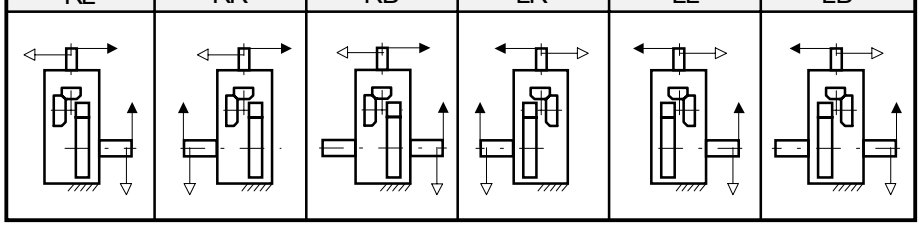					

Nomenclature

P W A [ ] R 2 - [ ] [ ] [ ] - [ ]

Size: 9015, 9025, 9030, 9035, 9040, 9050, 9055

Shaft Arrangement: RL, RR, RB, LR, LL, LB

Low Speed Shaft Type:
- (blank) : Solid Shaft
- T : Hollow shaft (Shrink Disk type)
- K : Hollow shaft (Key type)

Fan:
- (blank) :Without Fan
- F :With Fan

Nominal Reduction Ratio

Size	Nominal Reduction Ratio											
	6.3	7.1	8	9	10	11.2	12.5	14	16	18	20	22.4
9015	O	O	O	O	O	O	O	O	O	O		
9025	O	O	O	O	O	O	O	O	O	O		
9030	O	O	O	O	O	O	O	O	O	O		
9035			O	O	O	O	O	O	O	O	O	O
9040	O	O	O	O	O	O	O	O	O	O		
9050	O	O	O	O	O	O	O	O	O	O		
9055				O	O	O	O	O	O	O	O	O

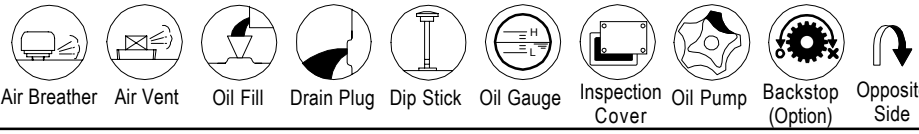

Air Breather | Air Vent | Oil Fill | Drain Plug | Dip Stick | Oil Gauge | Inspection Cover | Oil Pump | Backstop (Option) | Opposite Side

Sumitomo Heavy Industries, Ltd.
http://www.shi.co.jp/ptc

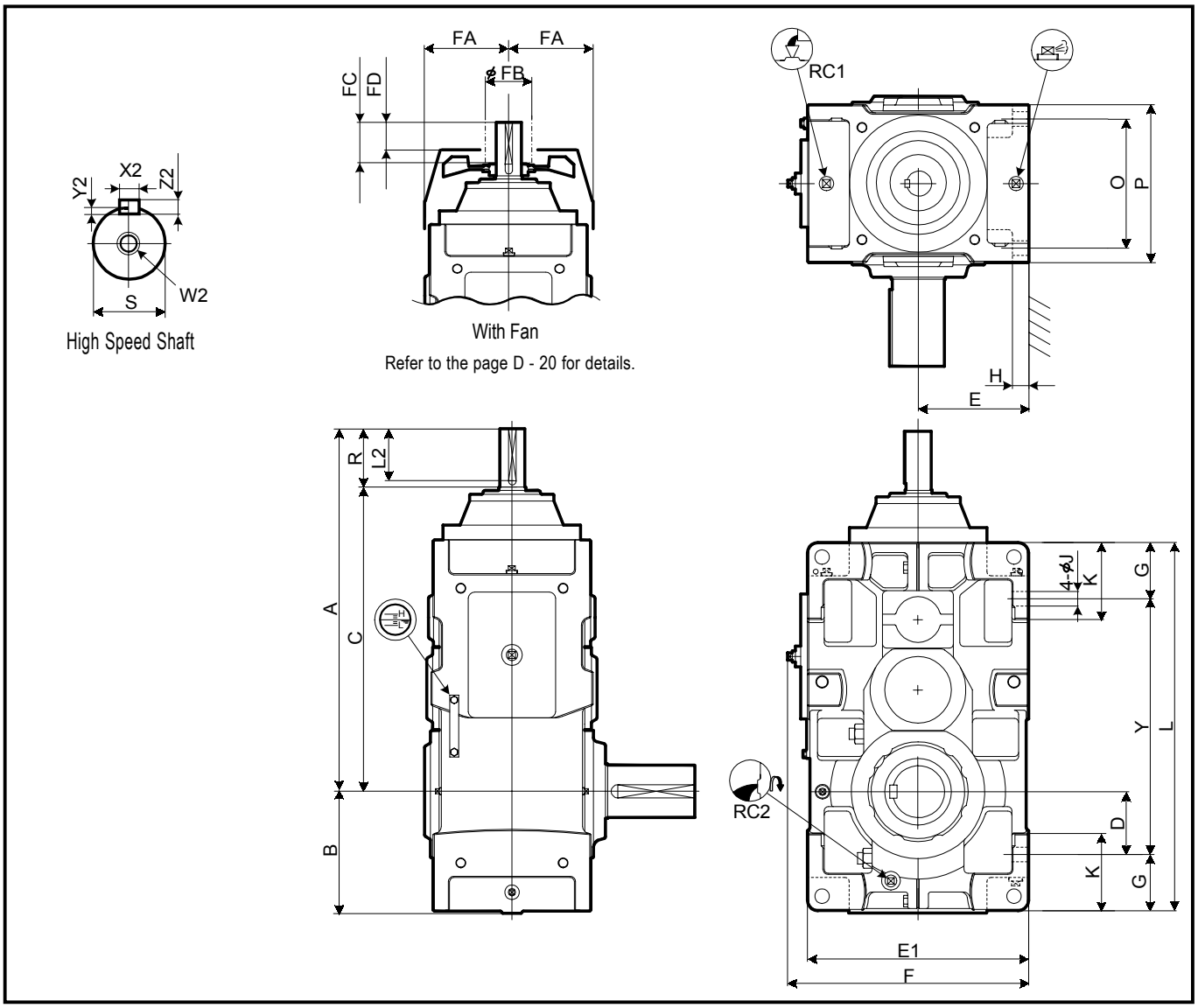

Size	A	B	C	D	E	E1	F	G	H	J	K	L	O	P	Y
9060	865	291	725	151	265	530	577	135	35	35	180	885	310	380	615
9070	965	328	825	163	300	600	647	160	40	42	215	1020	350	430	700
9075	1018	375	878	210	335	670	717	160	52	42	220	1120	350	430	800
9080	1080	370	940	205	335	670	717	160	52	42	220	1155	380	460	835
9085	1136	414	996	249	375	750	797	160	52	42	220	1255	380	460	935

Size	High Speed Shaft							Fan				RC1	RC2	Wt. kg	Oil Qty. L
	R	S	W2/Depth	Key				FA	FB	FC	FD				
				X2	Y2	Z2	L2								
9060	140	60m6	M20/42	18	7	11	125	220	160	105	65	1"	1"	600	44
9070	140	65m6	M20/42	18	7	11	125	245	200	105	65	1"	1"	920	65
9075	140	65m6	M20/42	18	7	11	125	245	200	105	65	1"	1"	1170	87
9080	140	75m6	M20/42	20	7.5	12	125	270	225	105	60	1"	1"	1300	90
9085	140	75m6	M20/42	20	7.5	12	125	270	225	105	60	1"	1"	1560	126

Units:mm

1.Key and keyways are based on ISO R773-1969 Close keys(JIS B1301-1996 Parallel key in fastening type)
2.The oil quantity is approximate.Oil shall be supplied within the range shown on the oil gauge.
3. Refer to the page D - 14 for dimensions not shown in these drawings.
4. Refer to the page D - 29 for the dimension of optional parts.

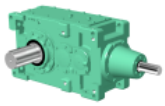

Slow Speed Shaft

Solid Shaft	Hollow Shaft (Shrink Disk Type)	Hollow Shaft (KeyType)
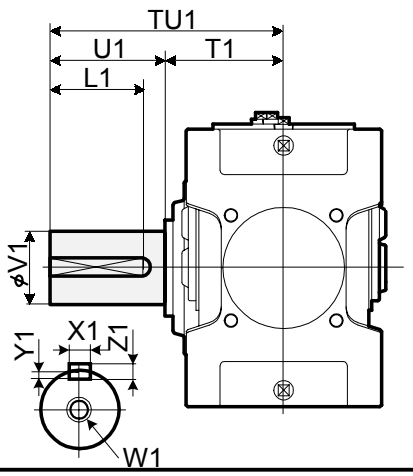	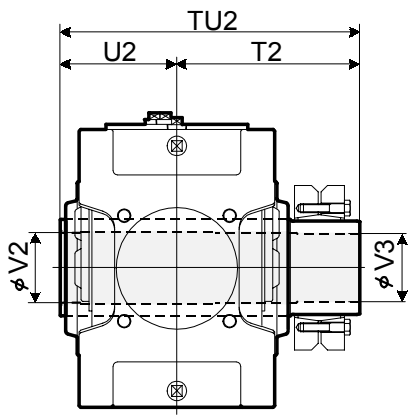 Refer to the page D-18 for details.	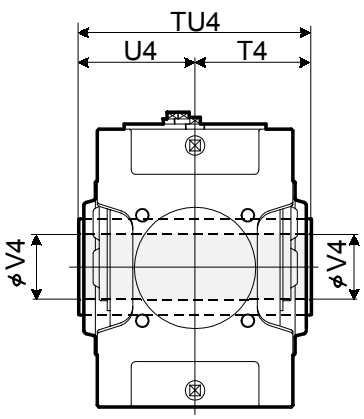 Refer to the page D -19 for details.

Size	Solid Shaft									Hollow Shaft (Shrink Disk Type)					Hollow Shaft (Key Type)			
	TU1	T1	U1	V1	W1/Depth	Key				TU2	T2	U2	V2	V3	TU4	T4	U4	V4
						X1	Y1	Z1	L1									
9060	440	230	210	125m6	M24/50	32	11	18	185	583	353	230	128	125	470	235	235	125
9070	509	259	250	145m6	M30/60	36	12	20	225	644	384	260	148	145	530	265	265	145
9075	562	262	300	160m6	M30/60	40	13	22	275	651	386	265	158	155	530	265	265	150
9080	582	282	300	165m6	M30/60	40	13	22	275	714	429	285	173	170	570	285	285	165
9085	585	285	300	175m6	M30/60	45	15	25	270	714	429	285	183	180	570	285	285	175

Units:mm

Standard Shaft Arrangement Configuration

RL	RR	RB	LR	LL	LB
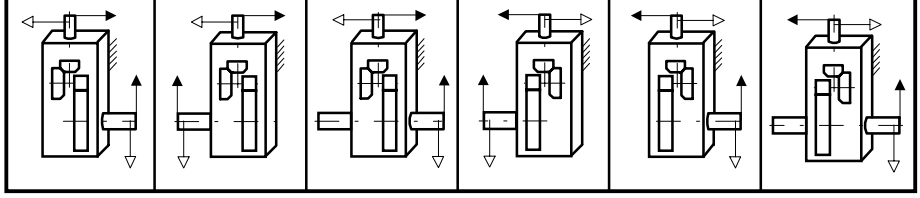					

Nomenclature

P W D [ ] R 2 W - [ ] [ ] [ ] - [ ]

Size: 9060, 9070, 9075, 9080, 9085

Shaft Arrangement: RL, RR, RB, LR, LL, LB

Low Speed Shaft Type:
- (blank) : Solid Shaft
- T : Hollow shaft (Shrink Disk type)
- K : Hollow shaft (Key type)

Fan:
- (blank) :Without Fan
- F :With Fan

Nominal Reduction Ratio

Size	Nominal Reduction Ratio											
	6.3	7.1	8	9	10	11.2	12.5	14	16	18	20	22.4
9060	O	O	O	O	O	O	O	O	O	O		
9070	O	O	O	O	O	O	O	O	O	O		
9075				O	O	O	O	O	O	O	O	O
9080	O	O	O	O	O	O	O	O	O	O		
9085					O	O	O	O	O	O	O	O

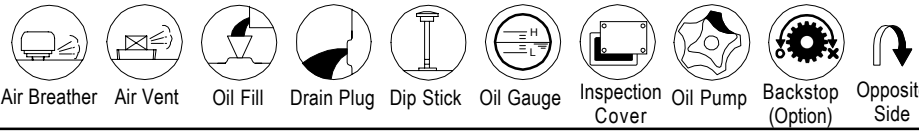

Air Breather, Air Vent, Oil Fill, Drain Plug, Dip Stick, Oil Gauge, Inspection Cover, Oil Pump, Backstop (Option), Opposite Side

Sumitomo Heavy Industries, Ltd.
http://www.shi.co.jp/ptc

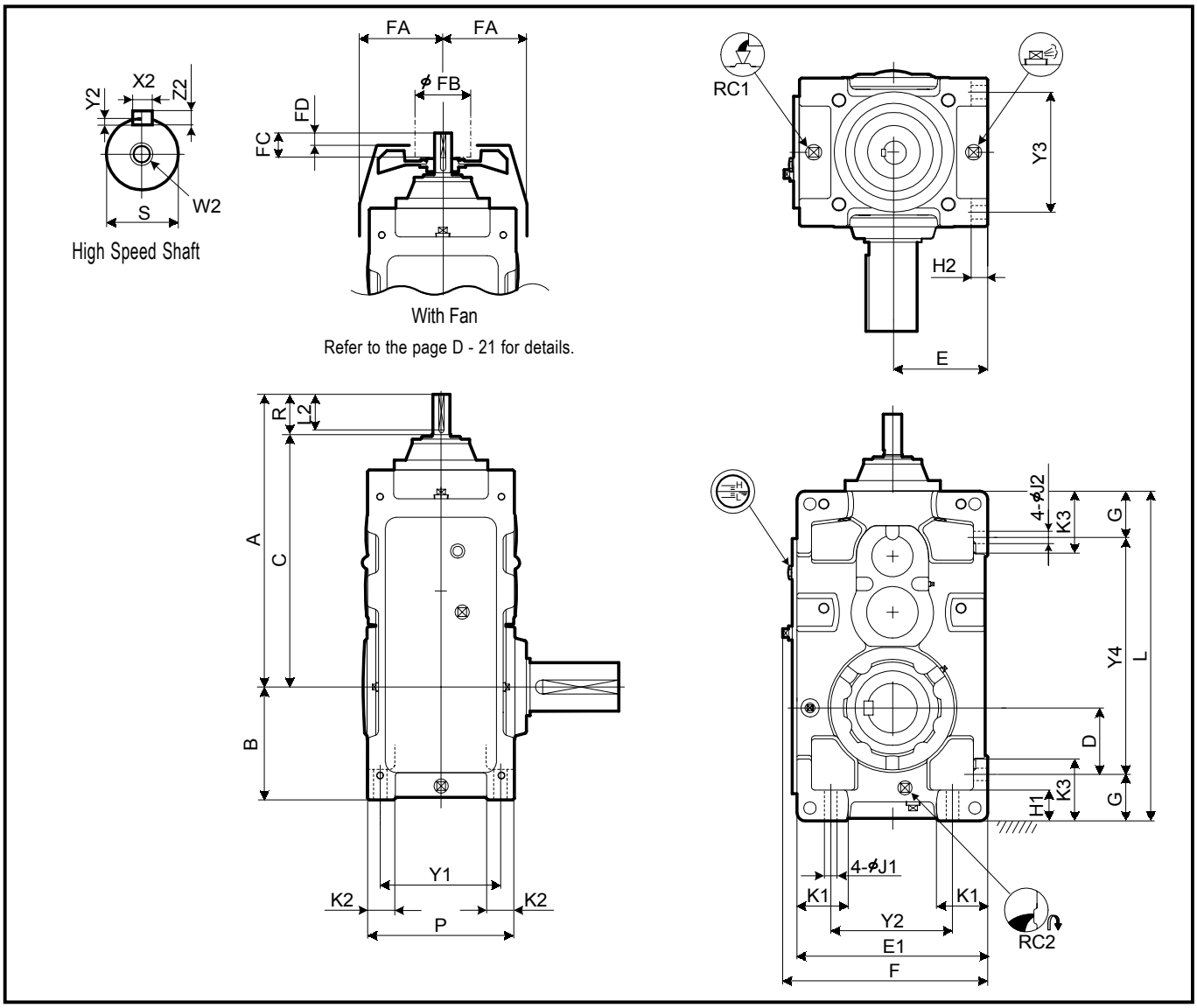

Size	A	B	C	D	E	E1	F	G	H1	H2	J1	J2	K1	K2	K3	L	P	Y1	Y2	Y3	Y4
9030	656	200	576	110	160	320	348	90	60	28	24	24	85	50	120	590	265	215	200	215	410
9035	687	219	607	129	185	370	398	90	60	28	24	24	100	50	120	640	265	215	250	215	460
9040	716	235	636	120	200	400	430	115	75	30	28	28	100	60	150	685	315	255	260	255	455
9050	808	255	728	138.5	210	420	450	116.5	75	32	28	28	110	60	150	775	345	285	280	285	542
9055	847	286	767	171	245	490	520	115	75	32	28	28	135	60	150	845	345	285	350	285	615

Size	High Speed Shaft							Fan				RC1	RC2	Wt. kg	Oil Qty. L
	R	S	W2/Depth	Key				FA	FB	FC	FD				
				X2	Y2	Z2	L2								
9030	80	28k6	M10/22	8	4	7	70	150	125	50	30	3/4"	3/4"	210	16
9035	80	28k6	M10/22	8	4	7	70	150	125	50	30	3/4"	3/4"	230	21
9040	80	30k6	M10/22	8	4	7	70	170	125	50	30	1"	1"	305	29
9050	80	35k6	M12/28	10	5	8	70	190	140	50	22	1"	1"	445	35
9055	80	35k6	M12/28	10	5	8	70	190	140	50	22	1"	1"	505	46

Units:mm

1.Key and keyways are based on ISO R773-1969 Close keys(JIS B1301-1996 Parallel key in fastening type)
2.The oil quantity is approximate.Oil shall be supplied within the range shown on the oil gauge.
3. Refer to the page D - 12 for dimensions not shown in these drawings.
4. Refer to the page D - 26 for the dimension of optional parts.

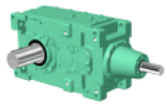

Slow Speed Shaft

Solid Shaft	Hollow Shaft (Shrink Disk Type)	Hollow Shaft (KeyType)
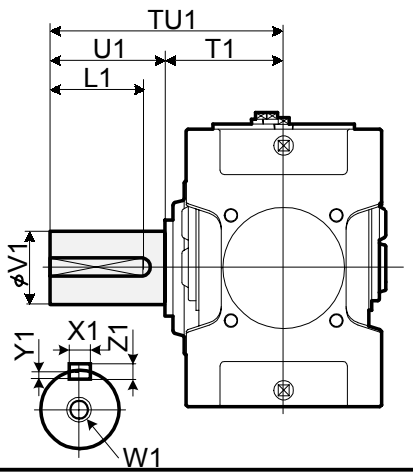	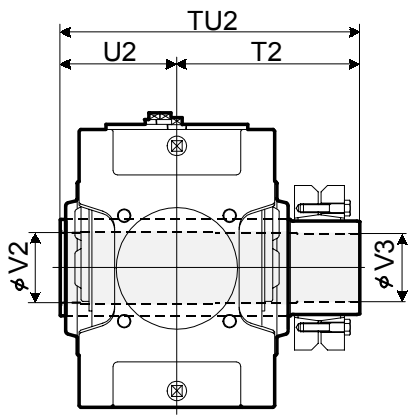 Refer to the page D-18 for details.	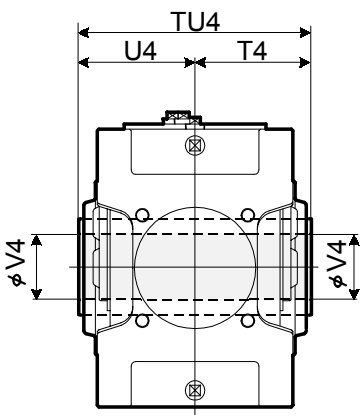 Refer to the page D -19 for details.

Size	Solid Shaft									Hollow Shaft (Shrink Disk Type)					Hollow Shaft (Key Type)			
	TU1	T1	U1	V1	W1/Depth	Key				TU2	T2	U2	V2	V3	TU4	T4	U4	V4
						X1	Y1	Z1	L1									
9030	330	160	170	80m6	M20/42	22	9	14	150	393	233	160	83	80	330	165	165	75
9035	330	160	170	90m6	M20/42	25	9	14	150	403	243	160	88	85	330	165	165	85
9040	349	179	170	95m6	M24/50	25	9	14	150	448	268	180	98	95	360	180	180	90
9050	411	201	210	110m6	M24/50	28	10	16	190	503	303	200	108	105	410	205	205	105
9055	411	201	210	120m6	M24/50	32	11	18	185	528	323	205	123	120	410	205	205	115

Units:mm

Standard Shaft Arrangement Configuration

RL	RR	RB	LR	LL	LB
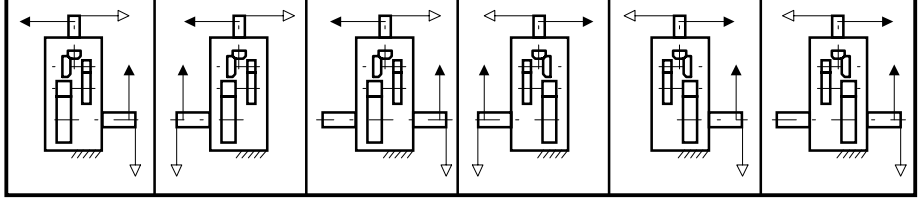					

Nomenclature

P W A [ ] R 3 - [ ] [ ] [ ] - [ ]

Size: 9030, 9035, 9040, 9050, 9055

Shaft Arrangement: RL, RR, RB, LR, LL, LB

Low Speed Shaft Type:
- (blank) : Solid Shaft
- T : Hollow shaft (Shrink Disk type)
- K : Hollow shaft (Key type)

Fan:
- (blank) :Without Fan
- F :With Fan

Nominal Reduction Ratio

Size	Nominal Reduction Ratio													
	20	22.4	25	28	31.5	35.5	40	45	50	56	63	71	80	90
9030	O	O	O	O	O	O	O	O	O	O	O	O		
9035			O	O	O	O	O	O	O	O		O	O	O
9040	O	O	O	O	O	O	O	O		O	O	O		
9050	O	O	O	O	O	O	O	O	O	O	O	O		
9055			O	O	O	O	O	O	O	O	O	O	O	O

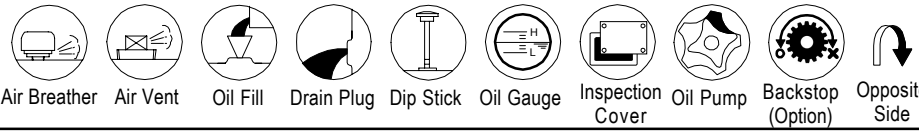

Air Breather | Air Vent | Oil Fill | Drain Plug | Dip Stick | Oil Gauge | Inspection Cover | Oil Pump | Backstop (Option) | Opposite Side

Sumitomo Heavy Industries, Ltd.
http://www.shi.co.jp/ptc

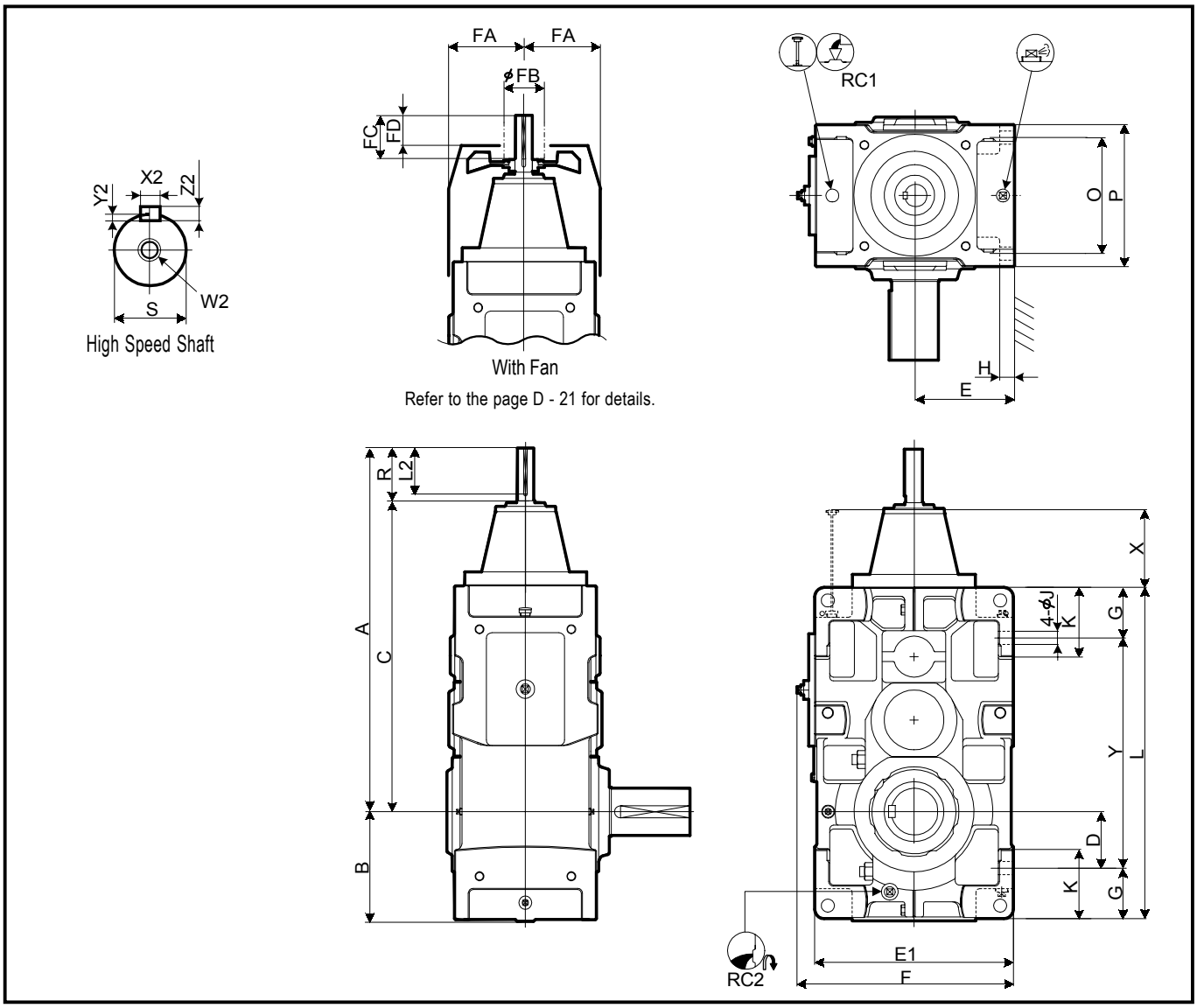

Size	A	B	C	D	E	E1	F	G	H	J	K	L	O	P	X	Y
9060	939	291	829	151	265	530	577	135	35	35	180	885	310	380	131	615
9070	1027	328	917	163	300	600	647	160	40	42	215	1020	350	430	138	700
9075	1080	375	970	210	335	670	717	160	52	42	220	1120	350	430	138	800
9080	1176	370	1036	205	335	670	717	160	52	42	220	1155	380	460	165	835
9085	1232	414	1092	249	375	750	797	160	52	42	220	1255	380	460	165	935

Size	High Speed Shaft							Fan				RC1	RC2	Wt. kg	Oil Qty. L
	R	S	W2/Depth	Key				FA	FB	FC	FD				
				X2	Y2	Z2	L2								
9060	110	45k6	M16/36	14	5.5	9	95	220	160	80	52	1"	1"	660	56
9070	110	50k6	M16/36	14	5.5	9	95	245	160	80	52	1"	1"	940	83
9075	110	50k6	M16/36	14	5.5	9	95	245	160	80	52	1"	1"	1190	100
9080	140	60m6	M20/42	18	7	11	125	270	160	105	65	1"	1"	1350	115
9085	140	60m6	M20/42	18	7	11	125	270	160	105	65	1"	1"	1610	144

Units:mm

1.Key and keyways are based on ISO R773-1969 Close keys(JIS B1301-1996 Parallel key in fastening type)
2.The oil quantity is approximate.Oil shall be supplied within the range shown on the oil gauge.
3. Refer to the page D - 14 for dimensions not shown in these drawings.
4. Refer to the page D - 29 for the dimension of optional parts.

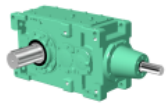

Slow Speed Shaft

Solid Shaft	Hollow Shaft (Shrink Disk Type)	Hollow Shaft (KeyType)
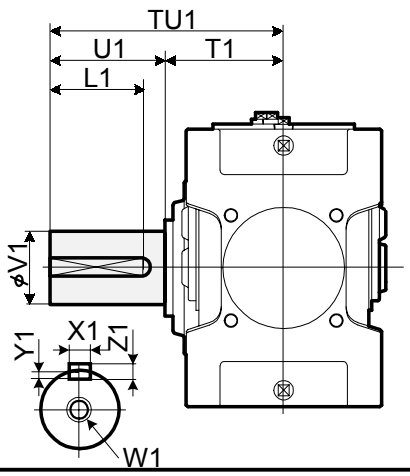	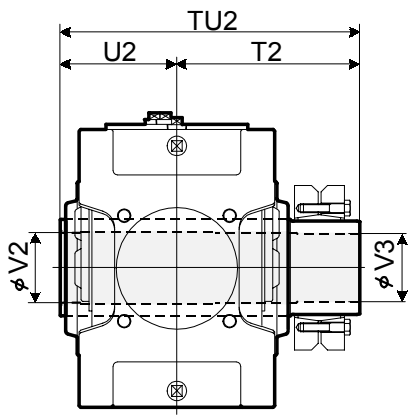 Refer to the page D-18 for details.	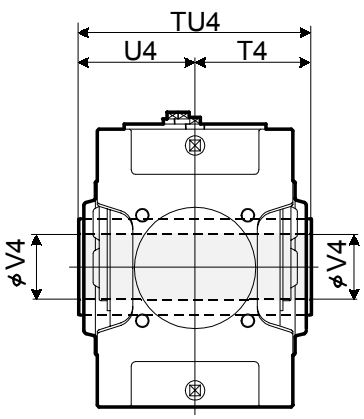 Refer to the page D -19 for details.

Size	Solid Shaft									Hollow Shaft (Shrink Disk Type)					Hollow Shaft (Key Type)			
	TU1	T1	U1	V1	W1/Depth	Key				TU2	T2	U2	V2	V3	TU4	T4	U4	V4
						X1	Y1	Z1	L1									
9060	440	230	210	125m6	M24/50	32	11	18	185	583	353	230	128	125	470	235	235	125
9070	509	259	250	145m6	M30/60	36	12	20	225	644	384	260	148	145	530	265	265	145
9075	562	262	300	160m6	M30/60	40	13	22	275	651	386	265	158	155	530	265	265	150
9080	582	282	300	165m6	M30/60	40	13	22	275	714	429	285	173	170	570	285	285	165
9085	585	285	300	175m6	M30/60	45	15	25	270	714	429	285	183	180	570	285	285	175

Units:mm

Standard Shaft Arrangement Configuration

RL	RR	RB	LR	LL	LB
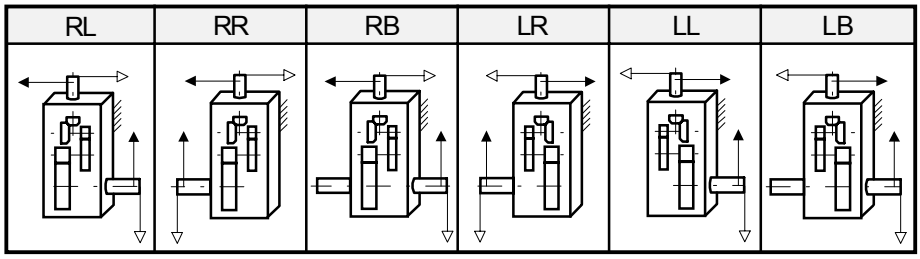					

Nomenclature

P W D [ ] R 3 W - [ ] [ ] [ ] - [ ]

Size: 9060, 9070, 9075, 9080, 9085

Shaft Arrangement: RL, RR, RB, LR, LL, LB

Low Speed Shaft Type:
- (blank) : Solid Shaft
- T : Hollow shaft (Shrink Disk type)
- K : Hollow shaft (Key type)

Fan:
- (blank) :Without Fan
- F :With Fan

Nominal Reduction Ratio

Size	Nominal Reduction Ratio													
	20	22.4	25	28	31.5	35.5	40	45	50	56	63	71	80	90
9060	O	O	O	O	O	O	O	O	O	O	O	O		
9070	O	O	O	O	O	O	O	O	O	O	O	O		
9075				O	O	O	O	O	O	O	O	O	O	O
9080	O	O	O	O	O	O	O	O	O	O	O	O		
9085			O	O	O	O	O	O	O	O	O	O	O	O

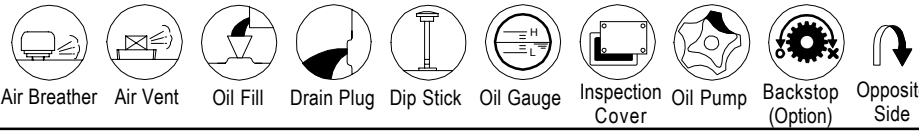

Air Breather, Air Vent, Oil Fill, Drain Plug, Dip Stick, Oil Gauge, Inspection Cover, Oil Pump, Backstop (Option), Opposite Side

Sumitomo Heavy Industries, Ltd.
http://www.shi.co.jp/ptc

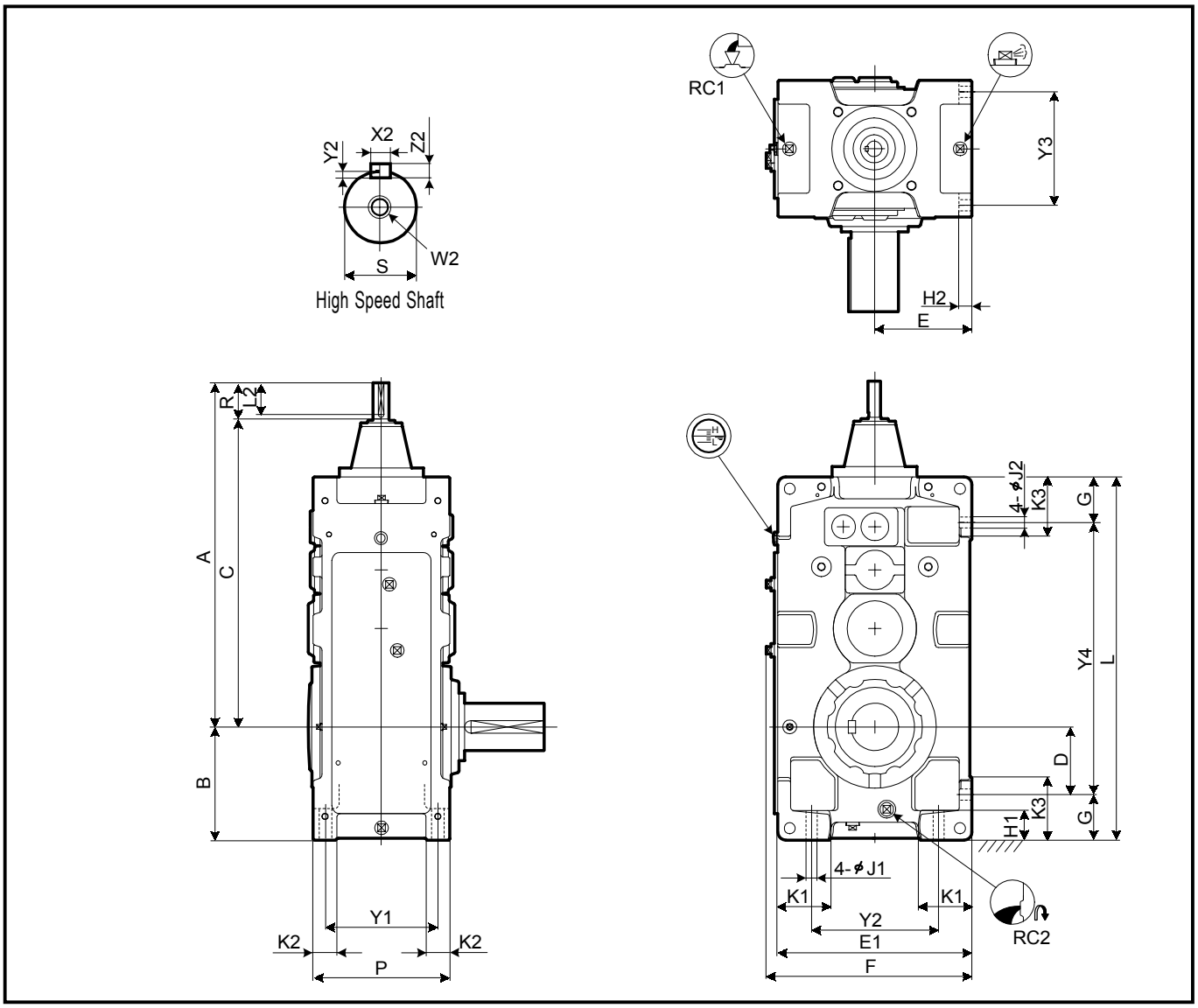

Size	A	B	C	D	E	E1	F	G	H1	H2	J1	J2	K1	K2	K3	L	P	Y1	Y2	Y3	Y4
9040	770	235	690	120	200	400	430	115	75	30	28	28	100	60	150	759	315	255	260	255	529
9050	859	255	779	138.5	210	420	450	116.5	75	32	28	28	110	60	150	848	345	285	280	285	615
9055	898	286	818	171	245	490	520	115	75	32	28	28	135	60	150	918	345	285	350	285	688

Size	High Speed Shaft							RC1	RC2	Wt. kg	Oil Qty. L
	R	S	W2/Depth	Key							
				X2	Y2	Z2	L2				
9040	80	28k6	M10/22	8	4	7	70	1"	1"	325	35
9050	80	28k6	M10/22	8	4	7	70	1"	1"	460	46
9055	80	28k6	M10/22	8	4	7	70	1"	1"	520	59

Units:mm

1.Key and keyways are based on ISO R773-1969 Close keys(JIS B1301-1996 Parallel key in fastening type)
2.The oil quantity is approximate.Oil shall be supplied within the range shown on the oil gauge.
3. Refer to the page D - 13 for dimensions not shown in these drawings.
4. Refer to the page D - 26 for the dimension of optional parts.

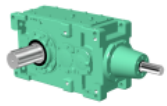

Slow Speed Shaft

Solid Shaft	Hollow Shaft (Shrink Disk Type)	Hollow Shaft (KeyType)
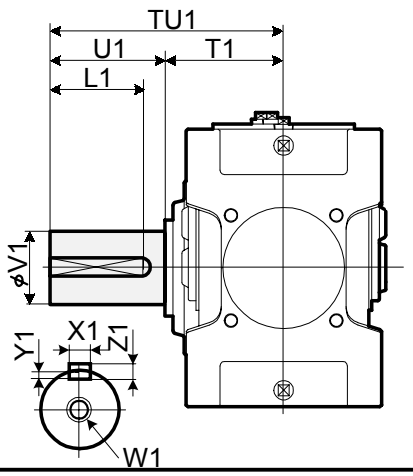	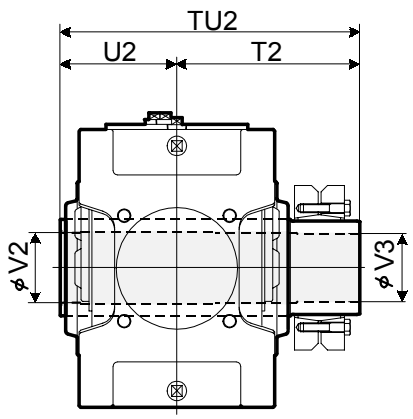 Refer to the page D-18 for details.	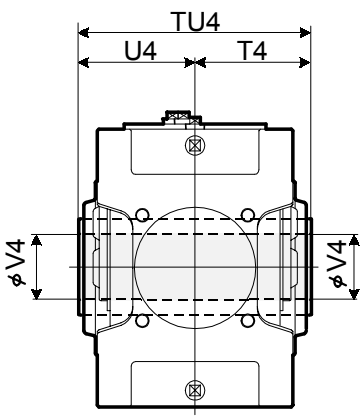 Refer to the page D -19 for details.

Size	Solid Shaft									Hollow Shaft (Shrink Disk Type)					Hollow Shaft (Key Type)			
	TU1	T1	U1	V1	W1/Depth	Key				TU2	T2	U2	V2	V3	TU4	T4	U4	V4
						X1	Y1	Z1	L1									
9040	349	179	170	95m6	M24/50	25	9	14	150	448	268	180	98	95	360	180	180	90
9050	411	201	210	110m6	M24/50	28	10	16	190	503	303	200	108	105	410	205	205	105
9055	411	201	210	120m6	M24/50	32	11	18	185	528	323	205	123	120	410	205	205	115

Units:mm

Standard Shaft Arrangement Configuration

RL	RR	RB	LR	LL	LB
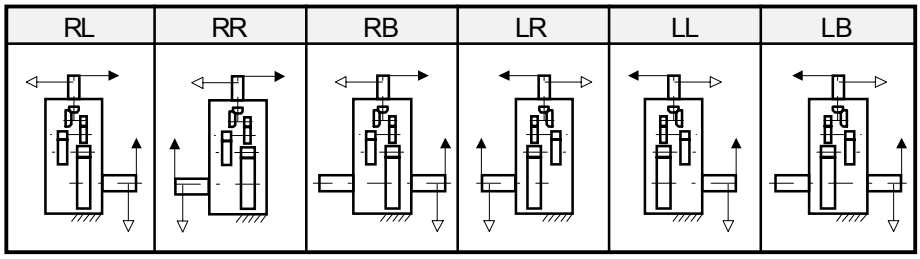					

Nomenclature

P W A [ ] R 4 - [ ] [ ] - [ ]

Size: 9040, 9050, 9055

Shaft Arrangement: RL, RR, RB, LR, LL, LB

Low Speed Shaft Type:
- (blank) : Solid Shaft
- T : Hollow shaft (Shrink Disk type)
- K : Hollow shaft (Key type)

Nominal Reduction Ratio

Size	Nominal Reduction Ratio															
	80	90	100	112	125	140	160	180	200	224	250	280	315	355	400	450
9040	O	O	O	O	O	O										
9050	O	O	O	O	O	O	O	O	O	O	O	O	O	O		
9055				O	O	O	O	O	O	O	O	O	O	O	O	O

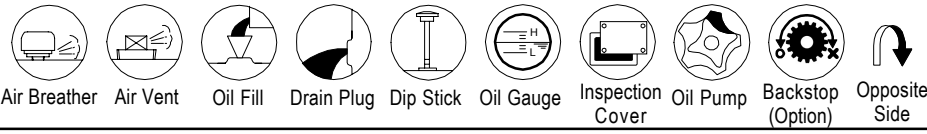

Air Breather, Air Vent, Oil Fill, Drain Plug, Dip Stick, Oil Gauge, Inspection Cover, Oil Pump, Backstop (Option), Opposite Side

Sumitomo Heavy Industries, Ltd.
http://www.shi.co.jp/ptc

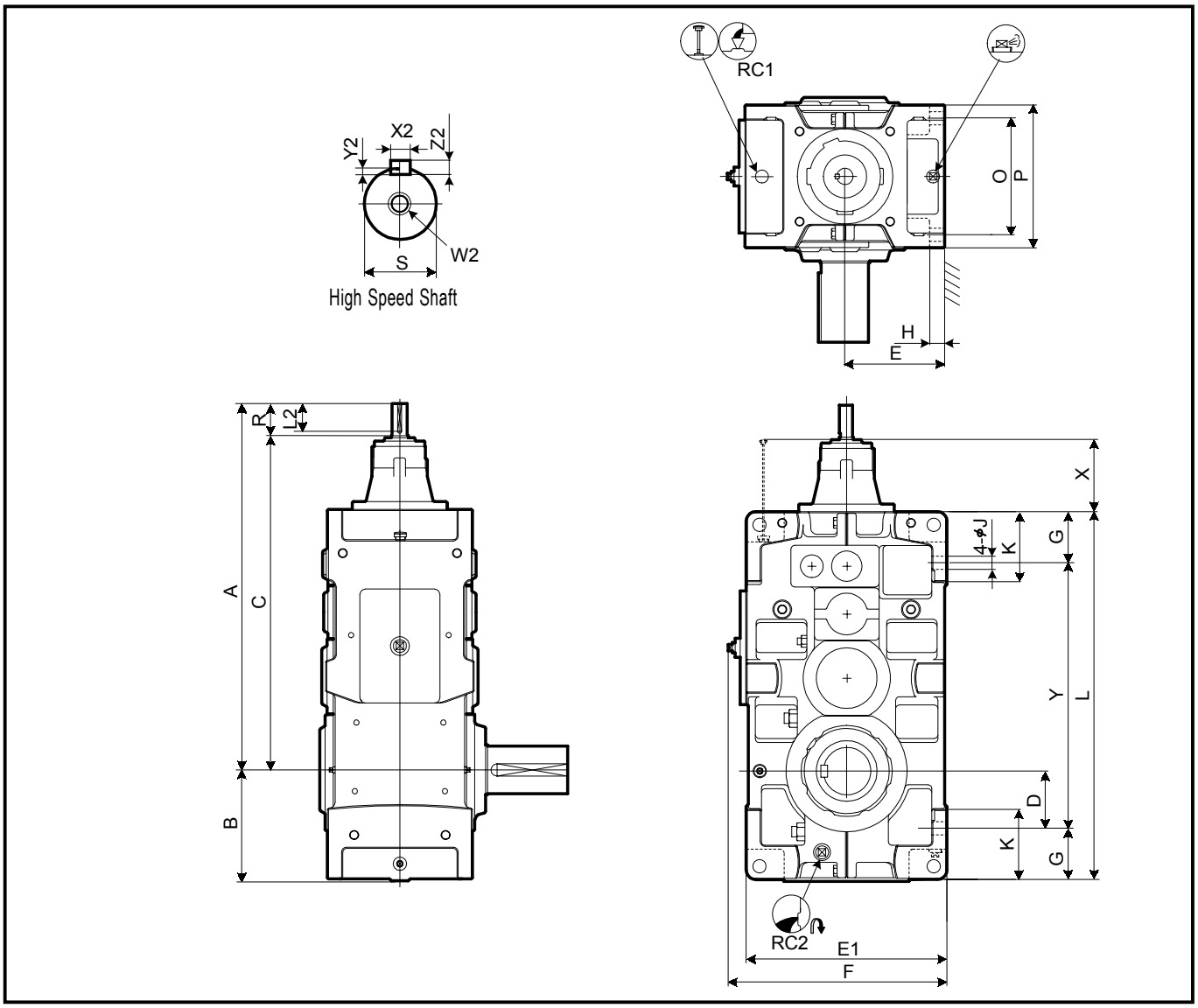

Size	A	B	C	D	E	E1	F	G	H	J	K	L	O	P	X	Y
9060	950	291	870	151	265	530	577	135	35	35	180	970	310	380	79	700
9070	1080	328	1000	163	300	600	647	160	40	42	215	1115	350	430	70	795
9075	1133	375	1053	210	335	670	717	160	52	42	220	1215	350	430	70	895
9080	1250	370	1140	205	335	670	717	160	52	42	220	1275	380	460	101	955
9085	1306	414	1196	249	375	750	797	160	52	42	220	1375	380	460	101	1055

Size	High Speed Shaft							RC1	RC2	Wt. kg	Oil Qty. L
	R	S	W2/Depth	Key							
				X2	Y2	Z2	L2				
9060	80	30k6	M10/22	8	4	7	70	1"	1"	670	68
9070	80	35k6	M12/28	10	5	8	70	1"	1"	960	107
9075	80	35k6	M12/28	10	5	8	70	1"	1"	1180	122
9080	110	45k6	M16/36	14	5.5	9	95	1"	1"	1390	128
9085	110	45k6	M16/36	14	5.5	9	95	1"	1"	1650	174

Units:mm

1.Key and keyways are based on ISO R773-1969 Close keys(JIS B1301-1996 Parallel key in fastening type)
2.The oil quantity is approximate.Oil shall be supplied within the range shown on the oil gauge.
3. Refer to the page D - 15 for dimensions not shown in these drawings.
4. Refer to the page D - 29 for the dimension of optional parts.

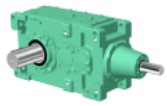

Slow Speed Shaft

Solid Shaft	Hollow Shaft (Shrink Disk Type)	Hollow Shaft (KeyType)
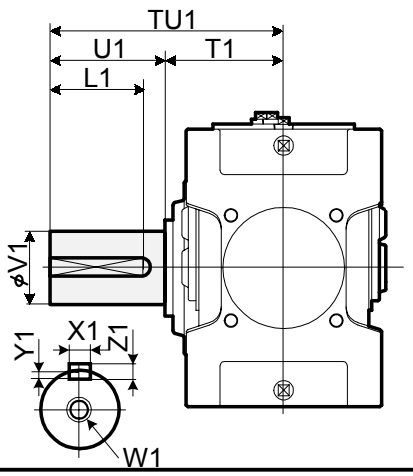	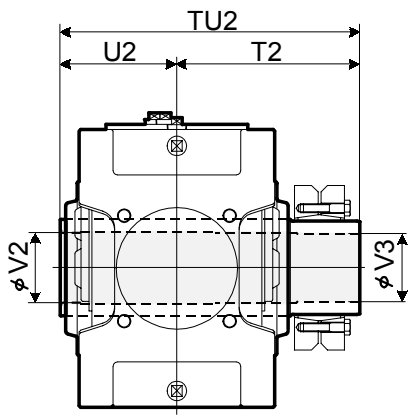 Refer to the page D-18 for details.	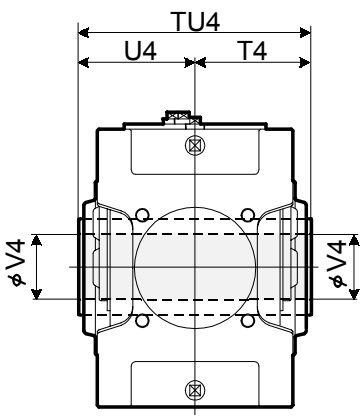 Refer to the page D -19 for details.

Size	Solid Shaft									Hollow Shaft (Shrink Disk Type)					Hollow Shaft (Key Type)			
	TU1	T1	U1	V1	W1/Depth	Key				TU2	T2	U2	V2	V3	TU4	T4	U4	V4
						X1	Y1	Z1	L1									
9060	440	230	210	125m6	M24/50	32	11	18	185	583	353	230	128	125	470	235	235	125
9070	509	259	250	145m6	M30/60	36	12	20	225	644	384	260	148	145	530	265	265	145
9075	562	262	300	160m6	M30/60	40	13	22	275	651	386	265	158	155	530	265	265	150
9080	582	282	300	165m6	M30/60	40	13	22	275	714	429	285	173	170	570	285	285	165
9085	585	285	300	175m6	M30/60	45	15	25	270	714	429	285	183	180	570	285	285	175

Units:mm

Standard Shaft Arrangement Configuration

RL	RR	RB	LR	LL	LB
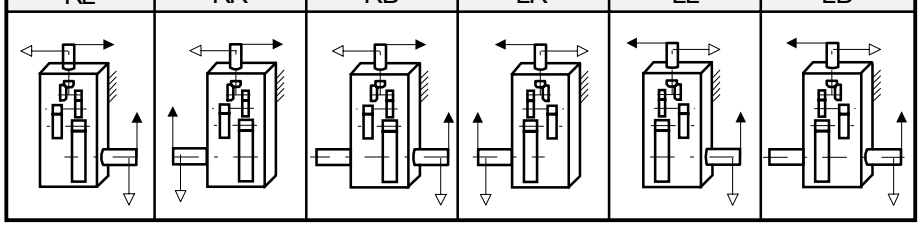					

Nomenclature

P W D [ ] R 4 W - [ ] [ ] - [ ]

Size: 9060, 9070, 9075, 9080, 9085

Shaft Arrangement: RL, RR, RB, LR, LL, LB

Low Speed Shaft Type:
- (blank) : Solid Shaft
- T : Hollow shaft (Shrink Disk type)
- K : Hollow shaft (Key type)

Nominal Reduction Ratio

Size	Nominal Reduction Ratio															
	80	90	100	112	125	140	160	180	200	224	250	280	315	355	400	450
9060		O	O	O	O	O	O	O	O	O	O	O	O	O		
9070	O	O	O	O	O	O	O	O	O	O	O	O	O	O		
9075			O	O	O	O	O	O		O	O	O	O	O	O	O
9080	O	O	O	O	O	O	O	O	O	O	O	O	O	O		
9085			O	O	O	O	O	O	O	O	O	O	O	O	O	O

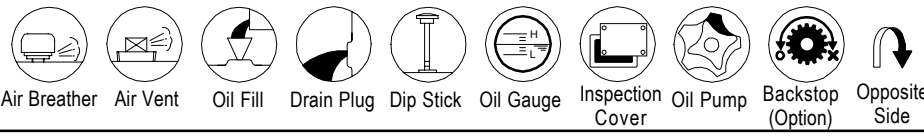

Air Breather, Air Vent, Oil Fill, Drain Plug, Dip Stick, Oil Gauge, Inspection Cover, Oil Pump, Backstop (Option), Opposite Side

Sumitomo Heavy Industries, Ltd.
http://www.shi.co.jp/ptc

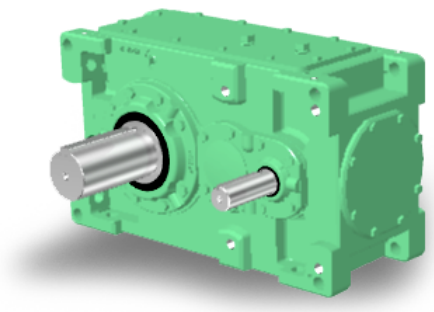

< Reducer : Parallel Shaft Horizontal Mounting >

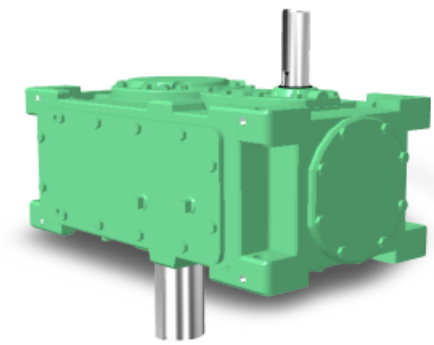

< Reducer : Parallel Shaft Vertical Mounting >

C

Reducer : Parallel shaft

Selection Tables	C- 106
Allowable Loads	C- 136
Dimension Sheets	C- 144

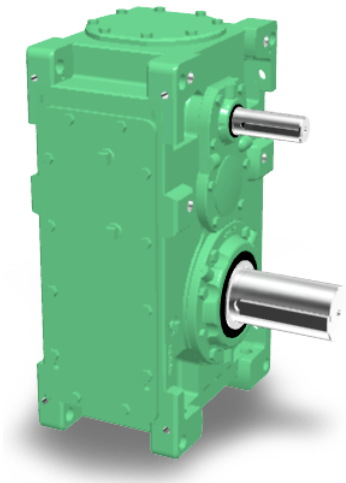

< Reducer : Parallel Shaft Upright Mounting >

MECHANICAL POWER RATING (kW)

Nominal Reduction Ratio	H.Speed Shaft Speed r/min	L.Speed Shaft Speed r/min	Size of Reducer													
			9015	**9025**	**9030**	**9035**	**9040**	**9050**	**9055**	**9060**	**9070**	**9075**	**9080**	**9085**	**9090**	**9095**
6.3	Exact Reduction Ratio		6.257	6.193	6.314		6.049	6.470		6.188	6.246		6.429		6.609	
	1800	**286**	76	122	179		257	350		603	900		1430		1950	
	1500	**238**	64	102	149		223	305		530	792		1250		1710	
	1200	**190**	51	82	120		187	256		448	677		1050		1450	
	1000	**159**	43	68	100		162	222		388	588		884		1240	
	900	**143**	39	62	91		148	203		355	538		798		1120	
	750	**119**	32	51	76		125	174		302	462		668		943	
7.1	Exact Reduction Ratio		7.237	7.067	6.806		6.903	7.366		7.210	6.998		7.090		7.190	7.333
	1800	**254**	62	100	161		241	349		559	900		1350		1830	1950
	1500	**211**	52	83	135		201	293		469	757		1130		1610	1710
	1200	**169**	42	67	108		162	235		377	610		914		1320	1450
	1000	**141**	35	56	90		136	197		316	511		766		1100	1240
	900	**127**	31	50	82		122	178		285	461		691		999	1140
	750	**106**	26.5	42	68		102	149		238	386		579		836	978
8	Exact Reduction Ratio		7.889	7.616	8.118	7.869	7.778	7.956	8.062	7.875	8.033	7.733	8.167	7.835	8.111	7.956
	1800	**225**	61	99	140	187	219	311	350	517	781	900	1230	1430	1660	1830
	1500	**188**	51	83	117	156	190	271	305	455	687	792	1030	1250	1450	1610
	1200	**150**	41	67	94	126	154	227	256	378	571	677	836	1070	1200	1360
	1000	**125**	34	56	78	105	129	195	222	317	478	588	700	932	1020	1170
	900	**113**	31	50	71	95	116	176	203	286	432	538	632	841	923	1060
	750	**94**	25.9	42	59	79	97	147	174	239	361	462	529	704	773	891
Dimension Tables		Horizontal	C-144	C-144	C-144	C-144	C-144	C-144	C-144	C-146	C-146	C-146	C-146	C-146	C-148	C-148
		Vertical	C-170	C-170	C-170	C-170	C-170	C-170	C-170	C-172	C-172	C-172	C-172	C-172	C-174	C-174
		Upright	C-188	C-188	C-188	C-188	C-188	C-188	C-188	C-190	C-190	C-190	C-190	C-190	-	-

THERMAL POWER RATING (kW)

Nominal Reduction Ratio	H.Speed Shaft Speed r/min	Number of Cooling Fans	Size of Reducer													
			9015	**9025**	**9030**	**9035**	**9040**	**9050**	**9055**	**9060**	**9070**	**9075**	**9080**	**9085**	**9090**	**9095**
Double Reduction Horizontal Type **6.3 ▼ 8**	**1800**	-	40	51	57	73	88	103	127	147	184	225	214	263	340	376
		1	111	132	143	193	216	250	308	415	479	531	510	709	1048	1113
	1500	-	39	50	58	75	89	106	131	151	192	238	232	284	360	401
		1	97	117	130	176	195	228	282	378	446	500	492	679	986	1056
	1200	-	38	49	58	75	88	106	131	151	196	245	240	296	370	415
		1	83	101	115	156	171	202	251	337	404	456	452	629	901	970
	1000	-	36	47	56	74	86	104	130	149	195	245	241	299	371	417
		1	71	86	100	136	148	176	220	294	356	405	402	562	799	864
	900	-	35	46	55	73	85	103	128	147	193	243	240	298	369	415
		1	66	81	94	128	139	166	208	277	337	385	382	537	761	823
	750	-	33	44	53	70	81	99	124	142	188	239	235	293	362	408
		1	57	70	82	113	122	146	183	245	300	343	342	481	680	737
Double Reduction Vertical Type **6.3 ▼ 8**	**1800**	-	39	49	54	69	84	98	120	135	163	200	182	229	220	256
	1500	-	38	49	56	72	86	102	125	142	182	219	210	258	277	311
	1200	-	37	48	56	73	86	103	128	145	194	231	231	278	317	351
	1000	-	36	46	55	72	85	102	127	144	195	235	239	285	330	369
	900	-	35	45	54	71	83	101	126	143	193	235	240	286	334	375
	750	-	33	43	52	69	80	98	122	139	188	232	235	284	336	378
Double Reduction Upright Type **6.3 ▼ 8**	**1800**	-	32	40	45	59	70	82	102	118	147	180	171	211		
		1	89	106	115	154	173	200	246	332	383	425	408	567		
	1500	-	31	40	46	60	71	85	105	121	154	190	186	227		
		1	78	94	104	141	156	182	225	303	357	400	394	543		
	1200	-	30	39	46	60	71	85	105	121	157	196	192	237		
		1	66	81	92	125	137	162	201	269	323	365	361	503		
	1000	-	29	38	45	59	69	83	104	119	156	196	193	239		
		1	56	69	80	109	118	141	176	235	285	324	321	450		
	900	-	28	37	44	58	68	82	102	117	154	195	192	238		
		1	53	65	75	103	111	133	166	222	270	308	306	429		
	750	-	26	35	43	56	65	79	99	114	151	191	188	235		
		1	45	56	66	90	97	117	147	196	240	275	273	385		

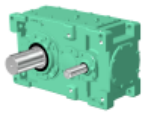

Size of Reducer										L.Speed Shaft Speed r/min	H.Speed Shaft Speed r/min	Nominal Reduction Ratio
9100	**9105**	**9110**	**9115**	**9118**	**9121**	**9126**	**9128**	**9131**	**9136**			
6.460		6.203								Exact Reduction Ratio		
2970		3900								**286**	**1800**	
2610		3440								**238**	**1500**	
2160		2940								**190**	**1200**	**6.3**
1810		2550								**159**	**1000**	
1630		2340								**143**	**900**	
1370		2000								**119**	**750**	
6.933	7.071	7.118	7.030							Exact Reduction Ratio		
2790	2970	3460	3910							**254**	**1800**	
2380	2610	3050	3440							**211**	**1500**	
1920	2230	2600	2940							**169**	**1200**	**7.1**
1610	1930	2240	2550							**141**	**1000**	
1450	1760	2020	2340							**127**	**900**	
1220	1480	1690	2000							**106**	**750**	
8.222	7.672	8.059	8.042							Exact Reduction Ratio		
2480	2790	3200	3460							**225**	**1800**	
2120	2450	2820	3050							**188**	**1500**	
1710	2080	2350	2610							**150**	**1200**	**8**
1430	1740	2020	2260							**125**	**1000**	
1290	1570	1850	2070							**113**	**900**	
1080	1310	1580	1780							**94**	**750**	
C-148	C-148	C-148	C-148							Horizontal	Dimension Tables	
C-174	C-174	C-174	C-174							Vertical		
-	-	-	-							Upright		

Notes

1. Consult us when the high speed shaft speed is over 1800r/min.
2. When the high speed shaft speed is not shown in the table, find it by the interpolation method.
3. When the high speed shaft speed(N) is lower than 750r/min, find the mechanical power rating(P_N) according to the following formula.

$$P_N = P_{750} \times \frac{N}{750}$$

4. Shown in the table are the ratings for the slow speed shaft.
5. Refer to C136 - C143 for the allowable radial and axial load on each shaft.

Size of Reducer										Number of Cooling Fans	H.Speed Shaft Speed r/min	Nominal Reduction Ratio
9100	**9105**	**9110**	**9115**	**9118**	**9121**	**9126**	**9128**	**9131**	**9136**			
415	471	504	575							-	**1800**	Double Reduction Horizontal Type **6.3 ▼ 8**
1179	1291	1337	1471							1		
454	509	567	633							-	**1500**	
1148	1241	1336	1443							1		
471	533	610	673							-	**1200**	
1056	1153	1277	1362							1		
474	539	621	687							-	**1000**	
942	1034	1152	1231							1		
472	538	621	689							-	**900**	
898	988	1103	1182							1		
465	532	616	685							-	**750**	
805	889	995	1069							1		
221	280	188	258							-	**1800**	Double Reduction Vertical Type **6.3 ▼ 8**
311	367	339	407							-	**1500**	
382	432	452	515							-	**1200**	
412	463	507	567							-	**1000**	
419	474	529	587							-	**900**	
425	484	549	608							-	**750**	
										-	**1800**	Double Reduction Upright Type **6.3 ▼ 8**
										1		
										-	**1500**	
										1		
										-	**1200**	
										1		
										-	**1000**	
										1		
										-	**900**	
										1		
										-	**750**	
										1		

Ambient Temperature °C	Temperature Correction Factor	
	Without Fan	With Fan
20	1.00	1.00
30	0.85	0.87
40	0.70	0.73
50	0.55	0.60

Notes

1. Shown in the table are the ratings for models without a fan cooling unit and those with a fan.
(-:none fan, 1:with a fan, 2:with two fans)
2. The values are applicable to continuous operation at ambient temperatures of 20 C or less. When the temperature in out of the range, refer to the temperature correction factor shown above.
3. When the high speed shaft speed is not shown in the table, find it by interpolation method.

MECHANICAL POWER RATING (kW)

Nominal Ratio	H.Speed Shaft Speed r/min	L.Speed Shaft Speed r/min	Size of Reducer													
			9015	**9025**	**9030**	**9035**	**9040**	**9050**	**9055**	**9060**	**9070**	**9075**	**9080**	**9085**	**9090**	**9095**
9	Exact Reduction Ratio		9.125	8.690	8.750	8.556	8.875	9.057	9.058	9.176	9.000	8.677	9.007	8.603	8.824	9.000
	1800	**200**	49	81	126	170	188	286	350	443	708	900	1070	1410	1560	1660
	1500	**167**	41	68	105	142	158	239	305	371	593	792	900	1180	1340	1450
	1200	**133**	33	55	85	114	127	192	246	298	477	647	725	956	1080	1200
	1000	**111**	28.0	46	71	96	106	161	206	250	400	542	607	801	907	1030
	900	**100**	25.3	41	64	86	95	145	186	225	361	489	548	723	818	948
	750	**83**	21.1	34	53	72	80	121	155	188	302	409	458	605	685	813
10	Exact Reduction Ratio		10.143	9.722	9.944	10.118	9.528	10.156	9.914	9.750	9.665	9.945	9.905	9.953	10.342	9.765
	1800	**180**	47	78	115	146	188	259	311	452	689	781	1020	1230	1380	1560
	1500	**150**	40	65	96	122	158	226	271	382	593	687	861	1080	1180	1370
	1200	**120**	32	52	77	98	127	184	227	307	477	588	693	881	964	1130
	1000	**100**	26.9	44	64	82	106	154	197	257	399	505	580	738	807	966
	900	**90**	24.2	39	58	74	95	139	180	232	360	456	524	666	728	872
	750	**75**	20.2	33	48	62	80	116	155	194	301	381	438	558	610	730
11.2	Exact Reduction Ratio		11.732	11.094	10.719	11.000	10.872	11.562	11.138	11.361	10.829	11.160	10.924	10.929	11.250	11.475
	1800	**161**	39	64	103	133	154	225	299	360	592	751	891	1120	1260	1380
	1500	**134**	32	53	86	111	129	188	250	301	495	629	746	941	1060	1180
	1200	**107**	26.2	43	69	89	104	151	201	242	399	507	600	758	855	981
	1000	**89**	21.9	36	58	75	87	127	168	202	334	424	503	635	716	842
	900	**80**	19.7	32	52	67	78	114	152	183	301	383	453	573	646	770
	750	**67**	16.5	27.3	43	56	65	95	127	153	252	320	379	479	540	651
Dimension Tables		Horizontal	C-144	C-144	C-144	C-144	C-144	C-144	C-144	C-146	C-146	C-146	C-146	C-146	C-148	C-148
		Vertical	C-170	C-170	C-170	C-170	C-170	C-170	C-170	C-172	C-172	C-172	C-172	C-172	C-174	C-174
		Upright	C-188	C-188	C-188	C-188	C-188	C-188	C-188	C-190	C-190	C-190	C-190	C-190	-	-

THERMAL POWER RATING (kW)

Nominal Ratio	H.Speed Shaft Speed r/min	Number of Cooling Fans	Size of Reducer													
			9015	**9025**	**9030**	**9035**	**9040**	**9050**	**9055**	**9060**	**9070**	**9075**	**9080**	**9085**	**9090**	**9095**
Double Reduction Horizontal Type **9 ▼ 11.2**	**1800**	-	35	46	53	67	81	99	124	141	180	222	216	266	333	365
		1	97	119	134	175	199	240	300	397	469	523	515	716	1024	1079
	1500	-	34	45	53	67	81	100	126	143	185	229	226	279	344	374
		1	84	104	120	158	177	215	271	358	431	481	479	669	942	986
	1200	-	32	43	52	66	79	98	125	142	187	231	230	286	347	376
		1	71	89	105	138	154	188	239	315	385	431	433	607	844	879
	1000	-	31	41	51	65	77	96	122	139	185	229	229	285	344	371
		1	60	76	90	119	132	163	207	273	337	378	382	536	741	770
	900	-	30	40	50	63	75	94	120	136	182	226	227	283	340	367
		1	56	70	85	112	124	153	195	257	319	357	362	509	702	728
	750	-	28	38	48	61	72	90	116	131	177	220	222	276	331	357
		1	48	61	74	98	108	133	171	226	282	316	322	453	622	644
Double Reduction Vertical Type **9 ▼ 11.2**	**1800**	-	35	46	53	64	81	98	118	139	180	203	216	238	241	274
	1500	-	34	45	53	65	81	100	121	143	185	221	226	266	284	315
	1200	-	32	43	52	65	79	98	122	142	187	231	230	285	306	335
	1000	-	31	41	51	63	77	96	120	139	185	229	229	285	313	340
	900	-	30	40	50	62	75	94	118	136	182	226	227	283	314	340
	750	-	28	38	48	60	72	90	115	131	177	220	222	276	311	337
Double Reduction Upright Type **9 ▼ 11.2**	**1800**	-	28	36	42	53	65	79	99	113	144	177	173	213		
		1	78	96	107	140	159	192	240	317	375	419	412	573		
	1500	-	27	36	43	54	65	80	101	114	148	183	181	224		
		1	68	84	96	126	141	172	217	287	345	385	383	535		
	1200	-	26	34	42	53	64	79	100	113	149	185	184	228		
		1	57	71	84	110	123	150	191	252	308	345	346	485		
	1000	-	25	33	41	52	62	77	98	111	148	183	183	228		
		1	48	61	72	95	106	130	166	219	270	302	305	429		
	900	-	24	32	40	51	60	75	96	109	146	181	182	226		
		1	45	56	68	89	99	122	156	206	255	286	290	407		
	750	-	22	30	38	49	58	72	93	105	142	176	177	221		
		1	38	48	59	78	86	107	137	181	225	253	257	362		

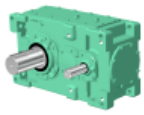

Size of Reducer										L.Speed Shaft Speed r/min	H.Speed Shaft Speed r/min	Nominal Reduction Ratio
9100	**9105**	**9110**	**9115**	**9118**	**9121**	**9126**	**9128**	**9131**	**9136**			
8.824	9.000	9.248	9.134							Exact Reduction Ratio		
2250	2480	2840	3200							**200**	**1800**	
1890	2190	2500	2820							**167**	**1500**	
1520	1820	2070	2350							**133**	**1200**	**9**
1270	1550	1740	2020							**111**	**1000**	
1150	1390	1570	1850							**100**	**900**	
965	1170	1310	1580							**83**	**750**	
9.984	9.765	9.774	10.449							Exact Reduction Ratio		
2090	2330	2780	2850							**180**	**1800**	
1760	2040	2400	2500							**150**	**1500**	
1410	1640	1990	2090							**120**	**1200**	**10**
1180	1380	1700	1790							**100**	**1000**	
1070	1240	1560	1640							**90**	**900**	
897	1040	1310	1390							**75**	**750**	
10.714	10.929	11.216	11.078							Exact Reduction Ratio		
1860	2150	2470	2780							**161**	**1800**	
1560	1850	2130	2400							**134**	**1500**	
1260	1530	1720	1990							**107**	**1200**	**11.2**
1050	1280	1440	1710							**89**	**1000**	
954	1150	1300	1560							**80**	**900**	
799	970	1090	1340							**67**	**750**	
C-148	C-148	C-148	C-148							Horizontal	Dimension Tables	
C-174	C-174	C-174	C-174							Vertical		
-	-	-	-							Upright		

Notes

1. Consult us when the high speed shaft speed is over 1800r/min.
2. When the high speed shaft speed is not shown in the table, find it by the interpolation method.
3. When the high speed shaft speed(N) is lower than 750r/min, find the mechanical power rating(P_N) according to the following formula.

$$P_N = P_{750} \times \frac{N}{750}$$

4. Shown in the table are the ratings for the slow speed shaft.
5. Refer to C136 - C143 for the allowable radial and axial load on each shaft.

Size of Reducer										Number of Cooling Fans	H.Speed Shaft Speed r/min	Nominal Reduction Ratio
9100	**9105**	**9110**	**9115**	**9118**	**9121**	**9126**	**9128**	**9131**	**9136**			
423	476	511	578							-	**1800**	Double Reduction Horizontal Type **9 ▼ 11.2**
1200	1303	1354	1480							1		
443	496	544	619							-	**1500**	
1119	1210	1282	1411							1		
452	504	563	644							-	**1200**	
1015	1090	1178	1302							1		
451	500	565	646							-	**1000**	
897	960	1049	1157							1		
448	496	563	642							-	**900**	
852	910	1000	1102							1		
438	484	554	631							-	**750**	
759	809	896	985							1		
279	326	276	338							-	**1800**	Double Reduction Vertical Type **9 ▼ 11.2**
344	388	379	441							-	**1500**	
384	434	456	518							-	**1200**	
400	448	485	554							-	**1000**	
404	451	495	566							-	**900**	
405	451	502	575							-	**750**	
										- 1	**1800**	Double Reduction Upright Type **9 ▼ 11.2**
										- 1	**1500**	
										- 1	**1200**	
										- 1	**1000**	
										- 1	**900**	
										- 1	**750**	

Ambient Temperature °C	Temperature Correction Factor	
	Without Fan	With Fan
20	1.00	1.00
30	0.85	0.87
40	0.70	0.73
50	0.55	0.60

Notes

1. Shown in the table are the ratings for models without a fan cooling unit and those with a fan.
(-:none fan, 1:with a fan, 2:with two fans)
2. The values are applicable to continuous operation at ambient temperatures of 20 C or less. When the temperature in out of the range, refer to the temperature correction factor shown above.
3. When the high speed shaft speed is not shown in the table, find it by interpolation method.

MECHANICAL POWER RATING (kW)

Nominal Ratio	H.Speed Shaft Speed r/min	L.Speed Shaft Speed r/min	Size of Reducer													
			9015	**9025**	**9030**	**9035**	**9040**	**9050**	**9055**	**9060**	**9070**	**9075**	**9080**	**9085**	**9090**	**9095**
12.5	Exact Reduction Ratio		12.710	12.407	12.785	12.394	12.485	12.594	12.656	12.206	12.600	11.966	12.762	12.071	12.978	12.450
	1800	**144**	38	61	89	120	145	222	259	366	547	689	804	1060	1110	1290
	1500	**120**	32	51	75	100	121	185	226	307	458	607	673	908	959	1110
	1200	**96**	25.8	41	60	80	97	149	190	246	368	504	542	731	773	910
	1000	**80**	21.5	34	50	67	81	125	164	206	308	422	453	612	647	762
	900	**72**	19.4	31	45	61	73	112	148	186	278	380	409	552	584	688
	750	**60**	16.2	26.2	38	51	61	94	124	155	232	318	342	462	488	576
14	Exact Reduction Ratio		14.701	14.158	13.781	13.475	14.247	14.337	14.219	14.224	14.118	13.428	14.076	13.255	14.118	14.400
	1800	**129**	31	50	81	109	118	183	235	289	457	628	696	931	1010	1110
	1500	**107**	26.1	42	67	91	99	153	197	242	383	526	583	780	851	958
	1200	**86**	21.0	34	54	73	79	123	158	194	308	423	469	628	685	794
	1000	**71**	17.5	28.5	45	61	66	102	132	162	257	354	392	526	573	681
	900	**64**	15.8	25.7	41	55	60	92	119	146	232	319	354	474	517	623
	750	**54**	13.2	21.4	34	46	50	77	100	122	194	267	296	397	433	521
16	Exact Reduction Ratio		15.778	15.340	15.997	15.935	15.556	16.504	15.694	15.996	15.750	15.600	15.556	15.554	16.222	15.624
	1800	**113**	31	50	72	94	116	170	237	281	440	565	663	846	920	1050
	1500	**94**	25.9	42	60	78	97	142	198	235	368	484	555	709	773	902
	1200	**75**	20.8	33	48	63	78	114	159	189	296	389	446	571	622	730
	1000	**63**	17.4	28.2	40	52	65	95	133	158	248	325	373	478	520	611
	900	**56**	15.7	25.4	36	47	59	86	120	142	223	293	337	431	469	551
	750	**47**	13.1	21.2	30	39	49	72	100	119	187	245	281	360	392	461
Dimension Tables		Horizontal	C-144	C-144	C-144	C-144	C-144	C-144	C-144	C-146	C-146	C-146	C-146	C-146	C-148	C-148
		Vertical	C-170	C-170	C-170	C-170	C-170	C-170	C-170	C-172	C-172	C-172	C-172	C-172	C-174	C-174
		Upright	C-188	C-188	C-188	C-188	C-188	C-188	C-188	C-190	C-190	C-190	C-190	C-190	-	-

THERMAL POWER RATING (kW)

Nominal Ratio	H.Speed Shaft Speed r/min	Number of Cooling Fans	Size of Reducer													
			9015	**9025**	**9030**	**9035**	**9040**	**9050**	**9055**	**9060**	**9070**	**9075**	**9080**	**9085**	**9090**	**9095**
Double Reduction Horizontal Type **12.5 ▼ 16**	**1800**	-	30	42	51	63	74	89	116	125	163	210	206	261	311	359
		1	85	111	130	167	182	214	281	353	425	495	489	701	959	1064
	1500	-	29	41	50	63	73	87	115	124	164	211	209	265	315	364
		1	72	95	113	148	159	188	248	311	380	444	442	635	862	959
	1200	-	27	39	48	62	70	85	112	121	161	209	208	264	311	362
		1	60	80	96	129	135	162	214	268	332	389	390	561	757	847
	1000	-	26	37	46	60	67	81	108	116	157	204	204	259	304	355
		1	50	67	81	110	115	138	183	230	286	336	339	488	656	736
	900	-	25	36	44	59	65	79	106	113	154	200	200	255	299	350
		1	46	62	75	103	107	128	171	214	269	316	319	460	617	694
	750	-	23	33	42	56	62	75	101	108	147	192	193	247	288	338
		1	39	53	64	90	92	111	149	186	235	277	280	404	542	611
Double Reduction Vertical Type **12.5 ▼ 16**	**1800**	-	31	43	52	63	75	90	116	130	170	210	216	261	258	289
	1500	-	29	41	51	63	74	88	115	127	169	211	220	265	274	316
	1200	-	27	39	48	62	71	85	112	123	165	209	216	264	283	328
	1000	-	26	37	46	60	67	82	108	118	160	204	210	259	283	329
	900	-	25	36	45	59	65	80	106	115	156	200	205	255	281	328
	750	-	23	33	42	56	62	76	101	109	149	192	197	247	274	322
Double Reduction Upright Type **12.5 ▼ 16**	**1800**	-	24	34	41	51	59	71	93	100	130	168	164	209		
		1	68	89	104	133	145	171	225	283	340	396	391	561		
	1500	-	23	33	40	51	58	70	92	99	131	169	167	212		
		1	58	76	90	119	127	151	198	249	304	355	354	508		
	1200	-	22	31	38	50	56	68	90	96	129	167	166	211		
		1	48	64	77	103	108	129	171	215	266	311	312	449		
	1000	-	20	29	37	48	54	65	87	93	125	163	163	207		
		1	40	54	65	88	92	110	147	184	229	269	271	390		
	900	-	20	28	35	47	52	63	85	91	123	160	160	204		
		1	37	50	60	83	85	103	137	171	215	253	255	368		
	750	-	18	27	33	45	49	60	81	86	118	154	154	197		
		1	31	42	51	72	74	89	119	149	188	221	224	324		

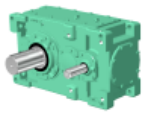

Size of Reducer										L.Speed Shaft Speed r/min	H.Speed Shaft Speed r/min	Nominal Reduction Ratio
9100	**9105**	**9110**	**9115**	**9118**	**9121**	**9126**	**9128**	**9131**	**9136**			
12.950	11.857	12.434	12.672							Exact Reduction Ratio		**12.5**
1630	2020	2240	2470							**144**	**1800**	
1360	1690	1920	2130							**120**	**1500**	
1100	1360	1590	1770							**96**	**1200**	
922	1140	1360	1520							**80**	**1000**	
832	1030	1240	1370							**72**	**900**	
696	864	1040	1150							**60**	**750**	
13.897	14.175	14.268	14.092							Exact Reduction Ratio		**14**
1450	1700	1990	2240							**129**	**1800**	
1210	1460	1690	1920							**107**	**1500**	
980	1190	1360	1590							**86**	**1200**	
821	996	1140	1370							**71**	**1000**	
740	899	1030	1250							**64**	**900**	
619	752	862	1070							**54**	**750**	
15.961	15.379	15.325	16.121							Exact Reduction Ratio		**16**
1330	1570	1870	2000							**113**	**1800**	
1110	1310	1600	1710							**94**	**1500**	
898	1060	1330	1420							**75**	**1200**	
752	887	1120	1200							**63**	**1000**	
678	800	1010	1080							**56**	**900**	
567	670	850	911							**47**	**750**	
C-148	C-148	C-148	C-148							Horizontal	Dimension Tables	
C-174	C-174	C-174	C-174							Vertical		
-	-	-	-							Upright		

Notes

1. Consult us when the high speed shaft speed is over 1800r/min.
2. When the high speed shaft speed is not shown in the table, find it by the interpolation method.
3. When the high speed shaft speed(N) is lower than 750r/min, find the mechanical power rating(P_N) according to the following formula.

$$P_N = P_{750} \times \frac{N}{750}$$

4. Shown in the table are the ratings for the slow speed shaft.
5. Refer to C136 - C143 for the allowable radial and axial load on each shaft.

Size of Reducer										Number of Cooling Fans	H.Speed Shaft Speed r/min	Nominal Reduction Ratio
9100	**9105**	**9110**	**9115**	**9118**	**9121**	**9126**	**9128**	**9131**	**9136**			
399	462	505	565							-	**1800**	Double Reduction Horizontal Type **12.5 ▼ 16**
1133	1265	1338	1446							1		
405	471	522	585							-	**1500**	
1024	1149	1230	1332							1		
404	471	527	592							-	**1200**	
905	1020	1103	1197							1		
396	464	522	588							-	**1000**	
788	890	968	1053							1		
390	458	516	582							-	**900**	
743	841	916	998							1		
378	444	502	568							-	**750**	
654	743	812	887							1		
315	344	343	373							-	**1800**	Double Reduction Vertical Type **12.5 ▼ 16**
342	392	406	452							-	**1500**	
359	417	449	504							-	**1200**	
362	423	463	521							-	**1000**	
361	423	466	525							-	**900**	
356	418	464	525							-	**750**	
										- 1	**1800**	Double Reduction Upright Type **12.5 ▼ 16**
										- 1	**1500**	
										- 1	**1200**	
										- 1	**1000**	
										- 1	**900**	
										- 1	**750**	

Ambient Temperature °C	Temperature Correction Factor	
	Without Fan	With Fan
20	1.00	1.00
30	0.85	0.87
40	0.70	0.73
50	0.55	0.60

Notes

1. Shown in the table are the ratings for models without a fan cooling unit and those with a fan.
(-:none fan, 1:with a fan, 2:with two fans)
2. The values are applicable to continuous operation at ambient temperatures of 20 C or less. When the temperature in out of the range, refer to the temperature correction factor shown above.
3. When the high speed shaft speed is not shown in the table, find it by interpolation method.

MECHANICAL POWER RATING (kW)

Nominal Ratio	H.Speed Shaft Speed r/min	L.Speed Shaft Speed r/min	Size of Reducer													
			9015	9025	9030	9035	9040	9050	9055	9060	9070	9075	9080	9085	9090	9095
18	Exact Reduction Ratio		18.250	17.503	17.243	17.325	17.750	18.789	17.631	18.640	17.647	17.506	17.157	17.078	17.647	18.000
	1800	100	25.3	41	65	85	95	140	191	222	368	485	574	728	818	920
	1500	83	21.1	34	54	71	80	117	159	185	308	406	481	610	685	789
	1200	67	17.0	27.6	43	57	64	94	128	149	247	326	386	490	551	654
	1000	56	14.2	23.1	36	48	53	78	107	124	207	273	323	410	461	555
	900	50	12.8	20.8	32	43	48	71	96	112	186	246	291	370	416	501
	750	42	10.7	17.4	27.5	36	40	59	81	94	156	206	244	310	348	419
20	Exact Reduction Ratio					19.938			20.566			19.500		18.958		19.529
	1800	90	*	*	*	75	*	*	182	*	*	465	*	699	*	867
	1500	75	*	*	*	63	*	*	152	*	*	389	*	585	*	730
	1200	60	*	*	*	50	*	*	122	*	*	313	*	470	*	587
	1000	50	*	*	*	42	*	*	102	*	*	261	*	393	*	491
	900	45	*	*	*	38	*	*	92	*	*	236	*	355	*	443
	750	38	*	*	*	31	*	*	77	*	*	197	*	297	*	370
22.4	Exact Reduction Ratio					21.676			23.105			21.882		20.817		
	1800	80	*	*	*	68	*	*	146	*	*	390	*	601	*	*
	1500	67	*	*	*	57	*	*	122	*	*	326	*	503	*	*
	1200	54	*	*	*	46	*	*	98	*	*	262	*	404	*	*
	1000	45	*	*	*	38	*	*	82	*	*	219	*	338	*	*
	900	40	*	*	*	34	*	*	74	*	*	198	*	305	*	*
	750	33	*	*	*	29.1	*	*	62	*	*	165	*	255	*	*
Dimension Tables		Horizontal	C-144	C-144	C-144	C-144	C-144	C-144	C-144	C-146	C-146	C-146	C-146	C-146	C-148	C-148
		Vertical	C-170	C-170	C-170	C-170	C-170	C-170	C-170	C-172	C-172	C-172	C-172	C-172	C-174	C-174
		Upright	C-188	C-188	C-188	C-188	C-188	C-188	C-188	C-190	C-190	C-190	C-190	C-190	-	-

THERMAL POWER RATING (kW)

Nominal Ratio	H.Speed Shaft Speed r/min	Number of Cooling Fans	Size of Reducer													
			9015	9025	9030	9035	9040	9050	9055	9060	9070	9075	9080	9085	9090	9095
Double Reduction Horizontal Type 18 ▼ 22.4	1800	-	29	41	50	60	66	88	106	127	166	194	209	247	309	336
		1	81	106	127	156	162	213	255	358	433	459	498	664	950	995
	1500	-	28	39	49	58	65	87	104	126	167	194	213	249	311	338
		1	69	91	110	135	142	187	223	316	387	407	450	595	854	889
	1200	-	26	37	47	55	63	84	100	122	164	189	211	245	308	332
		1	58	77	93	114	121	161	190	272	338	353	397	521	750	777
	1000	-	25	35	45	52	60	81	96	118	160	184	207	239	301	324
		1	48	65	79	96	103	137	162	233	291	303	345	450	650	672
	900	-	24	34	43	51	59	79	93	115	156	180	204	235	296	318
		1	44	60	73	89	97	128	151	217	273	284	325	423	611	631
	750	-	22	32	41	48	56	75	88	110	150	172	196	226	285	306
		1	37	51	63	76	84	110	130	188	239	247	285	370	536	553
Double Reduction Vertical Type 18 ▼ 22.4	1800	-	29	41	51	60	62	90	107	131	173	201	224	262	256	284
	1500	-	28	40	49	58	62	88	105	129	172	199	224	260	272	298
	1200	-	26	37	47	55	61	85	100	124	168	193	219	253	280	305
	1000	-	25	35	45	53	59	82	96	120	162	186	213	246	280	303
	900	-	24	34	43	51	57	79	93	116	159	182	209	240	278	300
	750	-	22	32	41	48	55	75	88	111	152	174	200	230	272	293
Double Reduction Upright Type 18 ▼ 22.4	1800	-	23	32	40	48	53	71	84	102	133	156	168	198		
		1	65	85	102	125	130	171	204	287	346	367	399	532		
	1500	-	22	31	39	46	52	70	83	101	133	155	170	199		
		1	55	73	88	108	114	150	178	253	310	326	360	476		
	1200	-	21	30	37	44	50	67	80	98	131	152	169	196		
		1	46	61	75	91	97	129	152	218	270	282	318	417		
	1000	-	20	28	36	42	48	65	76	94	128	147	166	191		
		1	38	52	63	77	83	110	129	186	233	243	276	360		
	900	-	19	27	35	40	47	63	74	92	125	144	163	188		
		1	35	48	59	71	77	102	121	174	219	227	260	339		
	750	-	18	25	32	38	45	60	70	88	120	138	157	181		
		1	30	41	50	61	67	88	104	151	191	198	228	296		

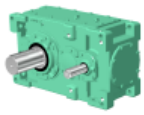

Size of Reducer										L.Speed Shaft Speed r/min	H.Speed Shaft Speed r/min	Nominal Reduction Ratio
9100	**9105**	**9110**	**9115**	**9118**	**9121**	**9126**	**9128**	**9131**	**9136**			
17.128	17.471	17.585	17.368							Exact Reduction Ratio		**18**
1180	1420	1650	1870							**100**	**1800**	
994	1200	1380	1610							**83**	**1500**	
799	971	1110	1330							**67**	**1200**	
669	812	931	1140							**56**	**1000**	
603	733	840	1040							**50**	**900**	
505	613	703	899							**42**	**750**	
	18.955		19.869							Exact Reduction Ratio		**20**
*	1280	*	1670							**90**	**1800**	
*	1070	*	1430							**75**	**1500**	
*	864	*	1170							**60**	**1200**	
*	723	*	983							**50**	**1000**	
*	652	*	887							**45**	**900**	
*	546	*	742							**38**	**750**	
										Exact Reduction Ratio		**22.4**
*	*	*	*							**80**	**1800**	
*	*	*	*							**67**	**1500**	
*	*	*	*							**54**	**1200**	
*	*	*	*							**45**	**1000**	
*	*	*	*							**40**	**900**	
*	*	*	*							**33**	**750**	
C-148	C-148	C-148	C-148							Horizontal	Dimension Tables	
C-174	C-174	C-174	C-174							Vertical		
-	-	-	-							Upright		

Notes

1. Consult us when the high speed shaft speed is over 1800r/min.
2. When the high speed shaft speed is not shown in the table, find it by the interpolation method.
3. When the high speed shaft speed(N) is lower than 750r/min, find the mechanical power rating(P_N) according to the following formula.

$$P_N = P_{750} \times \frac{N}{750}$$

4. Shown in the table are the ratings for the slow speed shaft.
5. Refer to C136 - C143 for the allowable radial and axial load on each shaft.

Size of Reducer										Number of Cooling Fans	H.Speed Shaft Speed r/min	Nominal Reduction Ratio
9100	**9105**	**9110**	**9115**	**9118**	**9121**	**9126**	**9128**	**9131**	**9136**			
402	437	485	537							-	**1800**	Double Reduction Horizontal Type **18 ▼ 22.4**
1141	1198	1285	1375							1		
408	441	500	550							-	**1500**	
1032	1076	1179	1252							1		
406	437	504	551							-	**1200**	
911	946	1056	1114							1		
399	428	499	543							-	**1000**	
793	821	926	973							1		
393	421	493	536							-	**900**	
747	773	876	920							1		
380	406	480	521							-	**750**	
658	679	776	813							1		
319	355	349	402							-	**1800**	Double Reduction Vertical Type **18 ▼ 22.4**
346	380	397	447							-	**1500**	
362	393	431	478							-	**1200**	
365	395	444	488							-	**1000**	
364	393	446	489							-	**900**	
358	385	444	485							-	**750**	
										-	**1800**	Double Reduction Upright Type **18 ▼ 22.4**
										1		
										-	**1500**	
										1		
										-	**1200**	
										1		
										-	**1000**	
										1		
										-	**900**	
										1		
										-	**750**	
										1		

Ambient Temperature °C	Temperature Correction Factor	
	Without Fan	With Fan
20	1.00	1.00
30	0.85	0.87
40	0.70	0.73
50	0.55	0.60

Notes

1. Shown in the table are the ratings for models without a fan cooling unit and those with a fan.
(-:none fan, 1:with a fan, 2:with two fans)
2. The values are applicable to continuous operation at ambient temperatures of 20 C or less. When the temperature in out of the range, refer to the temperature correction factor shown above.
3. When the high speed shaft speed is not shown in the table, find it by interpolation method.

MECHANICAL POWER RATING (kW)

Nominal Ratio	H.Speed Shaft Speed r/min	L.Speed Shaft Speed r/min	Size of Reducer													
			9015	9025	9030	9035	9040	9050	9055	9060	9070	9075	9080	9085	9090	9095
20	Exact Reduction Ratio		19.894	19.681	20.280		19.884	19.590		18.987	20.067		20.054		20.585	
	1800	90	26.4	39	61	*	98	154	*	254	356	*	554	*	758	*
	1500	75	22.1	33	51	*	82	129	*	213	310	*	463	*	650	*
	1200	60	17.7	27.8	41	*	66	103	*	171	250	*	372	*	527	*
	1000	50	14.8	23.6	34	*	55	86	*	143	209	*	311	*	441	*
	900	45	13.3	21.2	30	*	49	78	*	129	188	*	281	*	397	*
	750	38	11.1	17.7	25.8	*	41	65	*	107	157	*	235	*	332	*
22.4	Exact Reduction Ratio		23.011	22.457	21.860		22.689	22.303		22.125	22.484		22.119		22.394	22.841
	1800	80	21.5	34	55	*	80	127	*	201	310	*	480	*	694	758
	1500	67	18.0	28.8	46	*	67	106	*	168	260	*	401	*	581	650
	1200	54	14.4	23.1	37	*	54	85	*	135	208	*	322	*	467	539
	1000	45	12.1	19.3	30	*	45	71	*	112	174	*	269	*	391	462
	900	40	10.9	17.4	27.9	*	40	64	*	101	157	*	243	*	352	423
	750	33	9.1	14.5	23.3	*	34	53	*	85	131	*	203	*	294	355
25	Exact Reduction Ratio		24.696	24.332	25.374	25.277	24.774	25.673	24.413	24.883	25.083	24.844	24.444	24.441	25.732	24.782
	1800	72	21.4	32	49	64	79	118	165	195	299	356	456	572	624	713
	1500	60	17.8	28.2	41	53	66	98	138	163	250	310	382	488	527	612
	1200	48	14.3	22.9	32	43	53	79	110	131	201	260	307	392	423	497
	1000	40	12.0	19.1	27.5	35	44	66	92	109	168	220	256	328	354	416
	900	36	10.8	17.2	24.8	32	40	59	83	99	151	199	231	296	319	375
	750	30	9.0	14.4	20.7	27.0	33	50	69	82	126	166	193	247	267	313
Dimension Tables		Horizontal	C-150	C-150	C-150	C-150	C-150	C-150	C-150	C-152	C-152	C-152	C-152	C-152	C-154	C-154
		Vertical	C-176	C-176	C-176	C-176	C-176	C-176	C-176	C-178	C-178	C-178	C-178	C-178	C-180	C-180
		Upright	C-192	C-192	C-192	C-192	C-192	C-192	C-192	C-194	C-194	C-194	C-194	C-194	-	-

THERMAL POWER RATING (kW)

Nominal Ratio	H.Speed Shaft Speed r/min	Number of Cooling Fans	Size of Reducer													
			9015	9025	9030	9035	9040	9050	9055	9060	9070	9075	9080	9085	9090	9095
Triple Reduction Horizontal Type 20 ▼ 25	1800	-	24	36	42	54	63	77	97	107	145	179	184	225	235	264
		1	66	93	78	114	155	187	234	210	269	309	437	605	556	603
	1500	-	23	35	42	53	62	76	95	106	145	178	185	226	238	267
		1	58	81	68	99	135	164	205	185	238	273	391	540	501	545
	1200	-	22	34	40	51	60	74	92	104	142	175	183	223	237	266
		1	49	70	58	85	115	141	176	160	207	237	343	473	443	481
	1000	-	21	32	38	49	57	71	89	101	138	170	179	217	233	262
		1	41	59	50	72	98	121	151	138	179	204	298	409	386	419
	900	-	20	31	37	47	56	70	87	98	135	166	176	214	229	258
		1	38	55	46	67	91	113	141	129	168	192	280	385	364	396
	750	-	19	30	36	45	53	67	83	94	130	160	170	206	223	250
		1	33	48	40	58	79	98	122	113	147	168	247	338	322	349
Triple Reduction Vertical Type 20 ▼ 25	1800	-	22	33	40	51	60	73	91	100	135	167	168	206	212	238
	1500	-	22	33	40	50	59	73	91	101	137	169	173	212	221	248
	1200	-	21	32	39	49	58	71	89	100	136	168	174	212	225	252
	1000	-	21	31	37	47	56	69	87	97	134	165	172	210	223	251
	900	-	20	31	37	46	55	68	85	96	132	162	170	207	222	249
	750	-	19	29	35	44	52	65	81	92	127	156	166	201	217	243
Triple Reduction Upright Type 20 ▼ 25	1800	-	24	36	42	54	69	76	96	106	144	178	182	223		
		1	66	93	78	113	168	185	231	208	266	306	434	601		
	1500	-	23	35	41	53	67	76	94	105	144	177	184	225		
		1	57	81	68	99	147	163	203	184	236	271	389	537		
	1200	-	22	34	40	51	65	73	92	103	141	174	182	222		
		1	49	70	58	85	126	140	175	159	206	236	342	471		
	1000	-	21	32	38	48	62	71	89	100	137	169	178	217		
		1	41	59	50	72	107	120	150	137	178	203	297	408		
	900	-	20	31	37	47	61	69	86	98	135	166	175	213		
		1	38	55	46	67	100	112	140	129	167	191	280	384		
	750	-	19	30	35	45	58	66	83	94	130	159	170	206		
		1	33	48	40	58	86	98	122	112	146	167	246	338		

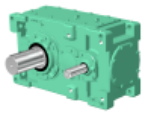

Size of Reducer										L.Speed Shaft Speed r/min	H.Speed Shaft Speed r/min	Nominal Reduction Ratio
9100	**9105**	**9110**	**9115**	**9118**	**9121**	**9126**	**9128**	**9131**	**9136**			
20.812		19.984								Exact Reduction Ratio		**20**
1100	*	1500	*							**90**	**1800**	
922	*	1290	*							**75**	**1500**	
742	*	1070	*							**60**	**1200**	
620	*	919	*							**50**	**1000**	
559	*	838	*							**45**	**900**	
468	*	701	*							**38**	**750**	
22.335	22.781	22.930	22.648					21.793	21.793	Exact Reduction Ratio		**22.4**
981	1140	1340	1500							**80**	**1800**	
821	982	1140	1290					3290	3430	**67**	**1500**	
660	801	919	1070					2650	2840	**54**	**1200**	
552	670	769	919					2220	2440	**45**	**1000**	
498	605	693	841					2000	2230	**40**	**900**	
416	506	580	708					1670	1910	**33**	**750**	
25.651	24.717	24.630	25.908	25.312				24.930	24.930	Exact Reduction Ratio		**25**
898	1060	1250	1340	1590						**72**	**1800**	
752	888	1080	1150	1400				2890	3060	**60**	**1500**	
604	714	895	954	1190				2320	2530	**48**	**1200**	
505	597	757	812	1050				1940	2170	**40**	**1000**	
456	538	683	732	955				1750	1990	**36**	**900**	
381	450	571	612	796				1470	1710	**30**	**750**	
C-154	C-154	C-154	C-154	C-156				C-158	C-158	Horizontal	Dimension Tables	
C-180	C-180	C-180	C-180	-				-	-	Vertical		
-	-	-	-	-				-	-	Upright		

Notes

1. Consult us when the high speed shaft speed is over 1800r/min.
2. When the high speed shaft speed is not shown in the table, find it by the interpolation method.
3. When the high speed shaft speed(N) is lower than 750r/min, find the mechanical power rating(P_N) according to the following formula.

$$P_N = P_{750} \times \frac{N}{750}$$

4. Shown in the table are the ratings for the slow speed shaft.
5. Refer to C136 - C143 for the allowable radial and axial load on each shaft.

Size of Reducer										Number of Cooling Fans	H.Speed Shaft Speed r/min	Nominal Reduction Ratio
9100	**9105**	**9110**	**9115**	**9118**	**9121**	**9126**	**9128**	**9131**	**9136**			
296	333	391	429	481				663	663	-	**1800**	Triple Reduction Horizontal Type **20 ▼ 25**
651	713	813	867	794				1095	1095	1		
301	340	399	436	486				701	701	-	**1500**	
590	647	738	784	801				1157	1157	1		
301	340	397	435	481				723	723	-	**1200**	
524	575	653	694	794				1193	1193	1		
297	336	391	428	472				726	726	-	**1000**	
458	503	569	605	779				1199	1199	1		
294	332	386	423	465				724	724	-	**900**	
433	475	538	572	768				1195	1195	1		
285	322	375	410	451				714	714	-	**750**	
383	421	475	506	744				1178	1178	1		
265	298	348	386							-	**1800**	Triple Reduction Vertical Type **20 ▼ 25**
278	313	367	404							-	**1500**	
285	321	377	412							-	**1200**	
285	321	375	411							-	**1000**	
283	319	372	408							-	**900**	
277	313	364	399							-	**750**	
										- 1	**1800**	Triple Reduction Upright Type **20 ▼ 25**
										- 1	**1500**	
										- 1	**1200**	
										- 1	**1000**	
										- 1	**900**	
										- 1	**750**	

Ambient Temperature °C	Temperature Correction Factor	
	Without Fan	With Fan
20	1.00	1.00
30	0.85	0.87
40	0.70	0.73
50	0.55	0.60

Notes

1. Shown in the table are the ratings for models without a fan cooling unit and those with a fan.
(-:none fan, 1:with a fan, 2:with two fans)
2. The values are applicable to continuous operation at ambient temperatures of 20 C or less. When the temperature in out of the range, refer to the temperature correction factor shown above.
3. When the high speed shaft speed is not shown in the table, find it by interpolation method.

MECHANICAL POWER RATING (kW)

Nominal Ratio	H.Speed Shaft Speed r/min	L.Speed Shaft Speed r/min	Size of Reducer													
			9015	**9025**	**9030**	**9035**	**9040**	**9050**	**9055**	**9060**	**9070**	**9075**	**9080**	**9085**	**9090**	**9095**
28	Exact Reduction Ratio		28.565	27.764	27.350	27.481	28.269	29.227	27.426	28.995	28.105	27.880	26.961	26.838	27.992	28.552
	1800	**64**	17.4	28.0	44	58	65	97	132	154	249	329	395	502	558	624
	1500	**54**	14.5	23.4	37	48	54	81	111	129	208	275	330	420	467	535
	1200	**43**	11.7	18.8	29.7	39	43	65	89	103	167	221	265	337	375	444
	1000	**36**	9.7	15.7	24.8	32	36	54	74	86	140	185	222	282	314	378
	900	**32**	8.8	14.1	22.3	29.5	32	49	67	78	126	167	200	254	283	341
	750	**27**	7.3	11.8	18.6	24.6	27	41	56	65	105	139	167	212	236	285
31.5	Exact Reduction Ratio		31.401	31.905	32.876	31.625	31.213	30.855	31.992	29.905	31.500	31.056	31.601	29.792	31.855	30.978
	1800	**57**	16.9	26.1	38	51	63	98	126	163	239	315	355	481	511	588
	1500	**48**	14.1	21.8	31	42	52	82	105	136	200	264	297	402	427	497
	1200	**38**	11.3	17.4	25.5	34	42	66	84	109	160	212	238	323	343	400
	1000	**32**	9.4	14.5	21.3	28.8	35	55	71	91	134	177	199	270	287	334
	900	**29**	8.5	13.1	19.2	25.9	31	49	64	82	121	159	179	244	259	301
	750	**24**	7.1	10.9	16.0	21.7	26.6	41	53	69	101	133	150	203	216	252
35.5	Exact Reduction Ratio		36.321	36.406	35.438	34.383	35.617	35.127	35.942	34.848	35.294	34.850	34.854	32.712	34.652	35.345
	1800	**51**	13.7	21.4	34	46	51	81	101	128	199	265	307	413	453	525
	1500	**42**	11.5	17.9	28.6	39	43	68	85	107	167	221	257	346	379	450
	1200	**34**	9.2	14.4	23.0	31	34	54	68	86	134	178	206	278	304	366
	1000	**28**	7.7	12.0	19.2	26.2	29.0	45	57	72	112	148	172	232	254	306
	900	**25**	6.9	10.8	17.3	23.6	26.1	41	51	65	101	134	155	209	229	276
	750	**21**	5.8	9.0	14.4	19.7	21.8	34	43	54	84	112	130	175	191	231
Dimension Tables		Horizontal	C-150	C-150	C-150	C-150	C-150	C-150	C-150	C-152	C-152	C-152	C-152	C-152	C-154	C-154
		Vertical	C-176	C-176	C-176	C-176	C-176	C-176	C-176	C-178	C-178	C-178	C-178	C-178	C-180	C-180
		Upright	C-192	C-192	C-192	C-192	C-192	C-192	C-192	C-194	C-194	C-194	C-194	C-194	-	-

THERMAL POWER RATING (kW)

Nominal Ratio	H.Speed Shaft Speed r/min	Number of Cooling Fans	Size of Reducer													
			9015	**9025**	**9030**	**9035**	**9040**	**9050**	**9055**	**9060**	**9070**	**9075**	**9080**	**9085**	**9090**	**9095**
Triple Reduction Horizontal Type **28 ▼ 35.5**	**1800**	-	21	32	39	49	58	74	92	104	140	171	177	218	230	250
		1	60	84	72	104	142	179	222	203	258	295	422	586	545	572
	1500	-	21	31	38	48	56	72	90	102	137	170	176	218	229	248
		1	51	72	62	91	122	156	194	178	226	260	372	521	484	506
	1200	-	19	30	36	46	53	69	87	98	133	165	171	214	225	243
		1	43	61	52	77	103	132	166	152	194	225	322	454	421	439
	1000	-	18	28	34	44	51	66	84	94	128	161	166	208	219	236
		1	36	51	44	65	87	112	142	129	166	193	277	392	363	378
	900	-	18	27	33	43	49	64	82	92	125	157	162	205	215	231
		1	33	48	41	61	81	104	132	121	155	181	259	369	341	355
	750	-	17	26	31	41	46	61	78	87	119	151	156	197	206	222
		1	28	41	35	52	69	90	115	104	135	158	226	323	298	310
Triple Reduction Vertical Type **28 ▼ 35.5**	**1800**	-	21	31	37	47	55	70	87	98	132	161	165	201	211	231
	1500	-	20	30	36	46	54	69	86	97	131	162	167	205	217	235
	1200	-	19	29	35	45	52	67	84	95	129	160	165	205	216	233
	1000	-	18	27	33	43	50	65	82	92	125	156	161	202	212	229
	900	-	17	27	32	42	48	63	80	90	122	153	158	199	209	225
	750	-	16	25	30	40	46	60	76	86	117	148	152	193	202	218
Triple Reduction Upright Type **28 ▼ 35.5**	**1800**	-	21	32	39	49	65	74	91	104	140	170	177	216		
		1	60	84	72	104	158	179	220	203	258	292	422	582		
	1500	-	21	31	38	48	62	72	89	102	137	169	176	216		
		1	51	72	62	90	136	156	193	178	226	258	372	518		
	1200	-	19	30	36	46	59	69	86	98	133	165	171	213		
		1	43	61	52	77	115	132	165	152	194	224	322	452		
	1000	-	18	28	34	44	56	66	83	94	128	160	166	208		
		1	36	51	44	65	97	112	141	129	166	193	277	391		
	900	-	18	27	33	43	55	64	81	92	125	157	162	204		
		1	33	48	41	61	90	104	132	121	155	181	259	368		
	750	-	17	26	31	41	51	61	77	87	119	151	156	197		
		1	28	41	35	52	77	90	114	104	135	158	226	323		

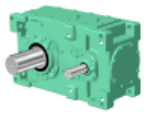

Size of Reducer										L.Speed Shaft Speed r/min	H.Speed Shaft Speed r/min	Nominal Reduction Ratio
9100	**9105**	**9110**	**9115**	**9118**	**9121**	**9126**	**9128**	**9131**	**9136**			
27.527	28.078	28.261	27.914		29.333	29.333	28.679	28.315	28.315	Exact Reduction Ratio		
800	957	1110	1260		1870	2000	2640			**64**	**1800**	
669	813	932	1080		1570	1720	2230	2550	2750	**54**	**1500**	
538	653	749	896		1260	1430	1790	2050	2280	**43**	**1200**	**28**
450	546	626	768		1050	1220	1500	1720	1960	**36**	**1000**	
405	492	565	703		954	1110	1350	1550	1790	**32**	**900**	
339	412	472	603		798	929	1130	1290	1530	**27**	**750**	
32.067	30.463	30.789	31.932	31.197	31.826	31.826	31.115	32.390	32.390	Exact Reduction Ratio		
722	865	1040	1120	1530	1730	1870	2460			**57**	**1800**	
604	724	898	963	1280	1450	1600	2060	2240	2450	**48**	**1500**	
485	581	727	791	1030	1160	1330	1660	1800	2030	**38**	**1200**	**31.5**
406	486	608	661	865	977	1130	1380	1500	1740	**32**	**1000**	
366	438	548	596	780	881	1020	1250	1360	1590	**29**	**900**	
306	366	458	499	653	736	857	1040	1130	1340	**24**	**750**	
34.412	35.100	35.329	34.895	36.870	36.000	36.000	36.500	34.341	34.341	Exact Reduction Ratio		
643	781	895	1040	1300	1530	1690	2110			**51**	**1800**	
538	653	749	899	1090	1280	1450	1760	2110	2340	**42**	**1500**	
432	525	602	745	878	1030	1200	1420	1700	1940	**34**	**1200**	**35.5**
361	439	503	639	735	866	1000	1180	1420	1660	**28**	**1000**	
325	395	454	581	662	780	908	1070	1280	1510	**25**	**900**	
272	330	379	485	554	652	759	895	1070	1260	**21**	**750**	
C-154	C-154	C-154	C-154	C-156	C-156	C-156	C-158	C-158	C-158	Horizontal	Dimension Tables	
C-180	C-180	C-180	C-180	-	-	-	-	-	-	Vertical		
-	-	-	-	-	-	-	-	-	-	Upright		

Notes

1. Consult us when the high speed shaft speed is over 1800r/min.
2. When the high speed shaft speed is not shown in the table, find it by the interpolation method.
3. When the high speed shaft speed(N) is lower than 750r/min, find the mechanical power rating(P_N) according to the following formula.

$$P_N = P_{750} \times \frac{N}{750}$$

4. Shown in the table are the ratings for the slow speed shaft.
5. Refer to C136 - C143 for the allowable radial and axial load on each shaft.

Size of Reducer										Number of Cooling Fans	H.Speed Shaft Speed r/min	Nominal Reduction Ratio
9100	**9105**	**9110**	**9115**	**9118**	**9121**	**9126**	**9128**	**9131**	**9136**			
294	323	378	417	467	508	508	564	657	657	-	**1800**	Triple Reduction Horizontal Type **28 ▼ 35.5**
647	691	786	842	770	838	838	931	1084	1084	1		
295	325	377	421	466	515	515	577	682	682	-	**1500**	
577	618	697	757	769	849	849	952	1125	1125	1		
290	319	369	415	458	512	512	579	689	689	-	**1200**	
504	538	607	661	756	845	845	955	1137	1137	1		
283	310	359	403	448	504	504	572	683	683	-	**1000**	
436	465	523	570	739	831	831	943	1128	1128	1		
278	305	353	395	440	497	497	565	677	677	-	**900**	
410	437	491	535	726	820	820	933	1117	1117	1		
268	294	340	380	426	483	483	551	661	661	-	**750**	
360	383	431	468	702	796	796	909	1091	1091	1		
267	292	344	380							-	**1800**	Triple Reduction Vertical Type **28 ▼ 35.5**
277	304	356	393							-	**1500**	
277	306	355	398							-	**1200**	
273	301	348	391							-	**1000**	
270	296	343	385							-	**900**	
262	287	332	373							-	**750**	
										- 1	**1800**	Triple Reduction Upright Type **28 ▼ 35.5**
										- 1	**1500**	
										- 1	**1200**	
										- 1	**1000**	
										- 1	**900**	
										- 1	**750**	

Ambient Temperature °C	Temperature Correction Factor	
	Without Fan	With Fan
20	1.00	1.00
30	0.85	0.87
40	0.70	0.73
50	0.55	0.60

Notes

1. Shown in the table are the ratings for models without a fan cooling unit and those with a fan.
(-:none fan, 1:with a fan, 2:with two fans)
2. The values are applicable to continuous operation at ambient temperatures of 20 C or less. When the temperature in out of the range, refer to the temperature correction factor shown above.
3. When the high speed shaft speed is not shown in the table, find it by interpolation method.

MECHANICAL POWER RATING (kW)

Nominal Ratio	H.Speed Shaft Speed r/min	L.Speed Shaft Speed r/min	Size of Reducer													
			9015	**9025**	**9030**	**9035**	**9040**	**9050**	**9055**	**9060**	**9070**	**9075**	**9080**	**9085**	**9090**	**9095**
40	Exact Reduction Ratio		38.980	39.444	41.134	40.976	38.889	40.435	38.450	39.190	39.375	39.000	38.519	38.514	39.818	38.349
	1800	**45**	13.6	21.2	30	39	50	75	105	125	192	252	292	374	411	482
	1500	**38**	11.4	17.7	25.5	33	42	63	88	104	160	211	244	313	343	403
	1200	**30**	9.1	14.2	20.4	26.7	34	50	70	84	129	169	196	251	276	324
	1000	**25**	7.6	11.9	17.1	22.3	28.5	42	59	70	107	141	164	210	230	271
	900	**23**	6.9	10.7	15.4	20.1	25.6	38	53	63	97	127	147	189	207	244
	750	**19**	5.7	8.9	12.8	16.8	21.4	31	44	52	81	106	123	158	173	204
45	Exact Reduction Ratio		45.088	45.009	44.338	44.550	44.375	46.033	43.197	45.667	44.118	43.765	42.484	42.289	43.316	44.182
	1800	**40**	11.1	17.4	27.5	36	41	62	85	98	160	212	253	321	364	432
	1500	**33**	9.3	14.5	22.9	30	34	52	71	82	134	177	211	269	304	366
	1200	**27**	7.4	11.6	18.4	24.3	27.9	41	57	66	107	142	170	216	244	294
	1000	**22**	6.2	9.7	15.4	20.3	23.3	34	47	55	89	118	142	180	204	246
	900	**20**	5.6	8.7	13.8	18.3	21.0	31	42	49	81	107	128	162	184	222
	750	**17**	4.7	7.3	11.5	15.3	17.5	26.2	35	41	67	89	106	135	153	185
50	Exact Reduction Ratio				51.141	51.268	49.248	49.634	50.388	48.825	51.188	48.750	51.845	46.944	51.911	47.936
	1800	**36**			24.6	31	40	61	81	100	148	203	218	308	316	388
	1500	**30**			20.5	26.7	33	51	67	84	124	169	182	257	264	324
	1200	**24**			16.5	21.4	27.0	41	54	67	99	136	146	207	212	260
	1000	**20**			13.8	17.9	22.5	34	45	56	83	113	122	173	177	217
	900	**18**			12.4	16.1	20.3	31	40	50	74	102	110	155	160	196
	750	**15**			10.3	13.4	16.9	26.0	34	42	62	85	92	130	133	163
Dimension Tables		Horizontal	C-150	C-150	C-150	C-150	C-150	C-150	C-150	C-152	C-152	C-152	C-152	C-152	C-154	C-154
		Vertical	C-176	C-176	C-176	C-176	C-176	C-176	C-176	C-178	C-178	C-178	C-178	C-178	C-180	C-180
		Upright	C-192	C-192	C-192	C-192	C-192	C-192	C-192	C-194	C-194	C-194	C-194	C-194	-	-

THERMAL POWER RATING (kW)

Nominal Ratio	H.Speed Shaft Speed r/min	Number of Cooling Fans	Size of Reducer													
			9015	**9025**	**9030**	**9035**	**9040**	**9050**	**9055**	**9060**	**9070**	**9075**	**9080**	**9085**	**9090**	**9095**
Triple Reduction Horizontal Type **40 ▼ 50**	**1800**	-	20	31	34	46	53	66	83	92	125	157	159	201	210	238
		1	57	80	63	97	130	159	200	180	230	270	377	540	497	545
	1500	-	20	30	33	44	51	64	80	89	121	154	155	198	206	236
		1	49	69	54	83	111	137	173	155	199	235	328	473	434	481
	1200	-	18	28	30	42	48	60	77	84	115	148	148	191	198	230
		1	41	58	44	70	92	115	146	130	168	201	279	406	371	416
	1000	-	17	27	29	39	45	57	73	80	110	142	142	185	191	223
		1	34	49	37	58	77	96	124	110	142	171	237	348	317	358
	900	-	17	26	27	38	43	55	71	78	106	138	138	180	186	219
		1	31	45	34	54	71	89	115	102	132	159	220	325	295	335
	750	-	16	24	25	36	40	51	67	73	101	132	131	172	177	210
		1	27	39	29	46	60	76	99	87	113	138	190	283	256	293
Triple Reduction Vertical Type **40 ▼ 50**	**1800**	-	20	29	33	44	51	64	80	88	119	150	151	190	199	223
	1500	-	19	29	32	43	50	62	78	86	117	148	149	189	198	225
	1200	-	18	27	30	41	47	59	75	82	112	144	144	185	192	222
	1000	-	17	26	28	39	44	56	72	78	108	139	139	180	186	217
	900	-	16	25	27	37	43	54	70	76	105	136	136	177	182	213
	750	-	15	24	25	35	40	51	66	72	99	130	129	170	174	206
Triple Reduction Upright Type **40 ▼ 50**	**1800**	-	20	31	34	46	59	66	83	92	125	157	159	201		
		1	57	80	63	97	145	159	200	180	230	270	377	540		
	1500	-	20	30	33	44	57	64	80	89	121	154	155	198		
		1	49	69	54	83	125	137	173	155	199	235	328	473		
	1200	-	18	28	30	42	54	60	77	84	115	148	148	191		
		1	41	58	44	70	105	115	146	130	168	201	279	406		
	1000	-	17	27	29	39	52	57	73	80	110	142	142	185		
		1	34	49	37	58	88	96	124	110	142	171	237	348		
	900	-	17	26	27	38	50	55	71	78	106	138	138	180		
		1	31	45	34	54	82	89	115	102	132	159	220	325		
	750	-	16	24	25	36	47	51	67	73	101	132	131	172		
		1	27	39	29	46	70	76	99	87	113	138	190	283		

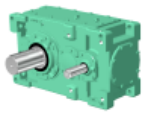

Size of Reducer										L.Speed Shaft Speed r/min	H.Speed Shaft Speed r/min	Nominal Reduction Ratio
9100	**9105**	**9110**	**9115**	**9118**	**9121**	**9126**	**9128**	**9131**	**9136**			
39.522	38.082	37.948	39.918	39.000	39.059	39.059	39.601	39.284	39.284	Exact Reduction Ratio		
589	695	875	933	1190	1420	1570	1940			**45**	**1800**	
492	581	738	791	1030	1180	1350	1630	1850	2080	**38**	**1500**	
395	467	593	635	831	955	1110	1310	1490	1730	**30**	**1200**	**40**
330	390	495	531	695	799	930	1090	1240	1470	**25**	**1000**	
298	352	447	479	627	720	839	988	1120	1320	**23**	**900**	
249	294	373	400	524	602	701	826	941	1110	**19**	**750**	
42.412	43.261	43.543	43.008	46.838	45.900	45.900	44.321	43.686	43.686	Exact Reduction Ratio		
524	636	730	876	1030	1210	1380	1740			**40**	**1800**	
438	532	610	751	865	1010	1180	1460	1670	1910	**33**	**1500**	
352	427	490	623	695	816	949	1170	1340	1580	**27**	**1200**	**45**
294	357	410	524	581	682	794	981	1120	1320	**22**	**1000**	
265	322	369	473	523	615	715	885	1010	1190	**20**	**900**	
221	269	308	395	437	514	598	740	848	1000	**17**	**750**	
50.361	46.936	48.355	49.198	48.067	49.800	49.800	48.087	49.974	49.974	Exact Reduction Ratio		
464	566	695	770	1000	1120	1280	1610			**36**	**1800**	
388	474	581	644	843	937	1090	1340	1460	1700	**30**	**1500**	
311	380	467	517	677	753	876	1080	1170	1390	**24**	**1200**	**50**
260	318	390	432	566	629	732	906	986	1160	**20**	**1000**	
234	286	352	390	510	567	660	817	889	1040	**18**	**900**	
196	239	294	326	426	474	552	682	742	876	**15**	**750**	
C-154	C-154	C-154	C-154	C-156	C-156	C-156	C-158	C-158	C-158	Horizontal	Dimension Tables	
C-180	C-180	C-180	C-180	-	-	-	-	-	-	Vertical		
-	-	-	-	-	-	-	-	-	-	Upright		

Notes

1. Consult us when the high speed shaft speed is over 1800r/min.
2. When the high speed shaft speed is not shown in the table, find it by the interpolation method.
3. When the high speed shaft speed(N) is lower than 750r/min, find the mechanical power rating(P_N) according to the following formula.

$$P_N = P_{750} \times \frac{N}{750}$$

4. Shown in the table are the ratings for the slow speed shaft.
5. Refer to C136 - C143 for the allowable radial and axial load on each shaft.

Size of Reducer										Number of Cooling Fans	H.Speed Shaft Speed r/min	Nominal Reduction Ratio
9100	**9105**	**9110**	**9115**	**9118**	**9121**	**9126**	**9128**	**9131**	**9136**			
274	307	363	396	440	488	488	545	631	631	-	**1800**	Triple Reduction Horizontal Type **40 ▼ 50**
603	656	756	801	726	805	805	899	1042	1042	1		
270	305	357	393	434	489	489	550	641	641	-	**1500**	
529	581	661	706	715	807	807	908	1058	1058	1		
262	299	344	383	421	482	482	546	639	639	-	**1200**	
454	505	566	611	695	795	795	901	1055	1055	1		
253	291	332	371	408	471	471	537	630	630	-	**1000**	
389	435	483	525	673	777	777	886	1039	1039	1		
247	285	324	364	399	463	463	529	622	622	-	**900**	
364	409	451	493	659	764	764	873	1026	1026	1		
236	275	309	350	383	448	448	514	604	604	-	**750**	
316	358	392	431	632	739	739	847	997	997	1		
259	286	340	373							-	**1800**	Triple Reduction Vertical Type **40 ▼ 50**
258	289	343	374							-	**1500**	
253	288	334	370							-	**1200**	
246	282	324	362							-	**1000**	
241	278	317	356							-	**900**	
232	269	304	343							-	**750**	
										- 1	**1800**	Triple Reduction Upright Type **40 ▼ 50**
										- 1	**1500**	
										- 1	**1200**	
										- 1	**1000**	
										- 1	**900**	
										- 1	**750**	

Ambient Temperature °C	Temperature Correction Factor	
	Without Fan	With Fan
20	1.00	1.00
30	0.85	0.87
40	0.70	0.73
50	0.55	0.60

Notes

1. Shown in the table are the ratings for models without a fan cooling unit and those with a fan.
(-:none fan, 1:with a fan, 2:with two fans)
2. The values are applicable to continuous operation at ambient temperatures of 20 C or less. When the temperature in out of the range, refer to the temperature correction factor shown above.
3. When the high speed shaft speed is not shown in the table, find it by interpolation method.

MECHANICAL POWER RATING (kW)

Nominal Ratio	H.Speed Shaft Speed r/min	L.Speed Shaft Speed r/min	Size of Reducer													
			9015	9025	9030	9035	9040	9050	9055	9060	9070	9075	9080	9085	9090	9095
56	Exact Reduction Ratio				55.125	55.739	56.195	56.507	56.608	56.894	57.353	54.706	57.182	51.547	56.471	57.600
	1800	32			22.1	29.1	33	50	65	79	123	170	189	264	280	338
	1500	27			18.5	24.3	27.6	42	54	66	103	142	158	221	234	282
	1200	21			14.8	19.5	22.1	34	43	53	83	114	126	177	188	226
	1000	18			12.4	16.2	18.5	28.5	36	44	69	95	105	148	157	189
	900	16			11.1	14.6	16.6	25.6	32	40	62	86	95	133	141	170
	750	13			9.3	12.2	13.9	21.4	27.4	33	52	71	79	111	118	142
63	Exact Reduction Ratio				63.986	63.741	61.358	65.045	61.852	63.984	63.984	63.375	63.194	63.186	64.889	62.494
	1800	29			19.7	25.7	32	47	66	77	119	156	179	230	254	299
	1500	24			16.5	21.5	27.1	39	55	64	99	131	150	192	212	249
	1200	19			13.2	17.2	21.7	31	44	51	79	105	120	154	170	200
	1000	16			11.0	14.4	18.1	26.5	37	43	66	87	100	129	142	167
	900	14			9.9	13.0	16.3	23.9	33	38	60	79	90	116	128	151
	750	12			8.3	10.8	13.6	19.9	27.8	32	50	66	75	97	107	126
71	Exact Reduction Ratio				68.971	69.300	70.014	74.051	69.488	74.559	71.691	71.118	69.700	69.381	70.588	72.000
	1800	25			17.7	23.4	26.6	39	53	60	99	131	155	197	225	271
	1500	21			14.8	19.6	22.2	32	44	50	83	109	130	165	188	226
	1200	17			11.9	15.7	17.8	26.1	35	40	66	88	104	132	151	182
	1000	14			9.9	13.1	14.8	21.8	29.7	34	55	73	87	110	126	152
	900	13			8.9	11.8	13.4	19.6	26.8	30	50	66	78	99	113	137
	750	11			7.4	9.8	11.2	16.4	22.4	25.6	41	55	65	83	95	114
Dimension Tables		Horizontal			C-150	C-150	C-150	C-150	C-150	C-152	C-152	C-152	C-152	C-152	C-154	C-154
		Vertical			C-176	C-176	C-176	C-176	C-176	C-178	C-178	C-178	C-178	C-178	C-180	C-180
		Upright			C-192	C-192	C-192	C-192	C-192	C-194	C-194	C-194	C-194	C-194	-	-

THERMAL POWER RATING (kW)

Nominal Ratio	H.Speed Shaft Speed r/min	Number of Cooling Fans	Size of Reducer													
			9015	9025	9030	9035	9040	9050	9055	9060	9070	9075	9080	9085	9090	9095
Triple Reduction Horizontal Type 56 ▼ 71	1800	-			32	39	49	62	78	86	119	146	152	186	198	214
		1			59	83	120	150	188	169	219	250	362	500	469	491
	1500	-			30	37	47	60	75	83	115	141	148	181	194	210
		1			50	70	102	128	161	145	189	216	314	432	409	427
	1200	-			28	35	44	56	70	79	109	134	142	172	187	201
		1			42	58	85	107	134	122	160	182	267	366	350	364
	1000	-			27	33	41	53	66	75	104	127	136	165	180	193
		1			34	48	71	90	112	103	135	153	227	310	298	310
	900	-			26	31	40	51	64	73	101	123	132	160	175	188
		1			32	44	65	83	104	95	125	142	211	289	278	289
	750	-			24	29	37	48	60	68	95	116	125	152	167	179
		1			27	38	55	71	89	82	108	122	182	249	241	250
Triple Reduction Vertical Type 56 ▼ 71	1800	-			31	38	47	60	75	83	114	140	145	178	188	205
	1500	-			30	36	46	58	73	81	111	137	143	175	187	202
	1200	-			28	34	43	55	69	77	107	131	138	168	182	196
	1000	-			26	32	41	52	65	74	102	125	133	162	176	189
	900	-			25	31	39	51	63	72	100	122	130	157	172	185
	750	-			24	29	37	48	59	68	94	115	124	150	164	177
Triple Reduction Upright Type 56 ▼ 71	1800	-			32	39	54	62	78	86	119	146	152	186		
		1			59	83	133	150	188	169	219	250	362	500		
	1500	-			30	37	52	60	75	83	115	141	148	181		
		1			50	70	113	128	161	145	189	216	314	432		
	1200	-			28	35	49	56	70	79	109	134	142	172		
		1			42	58	94	107	134	122	160	182	267	366		
	1000	-			27	33	46	53	66	75	104	127	136	165		
		1			34	48	79	90	112	103	135	153	227	310		
	900	-			26	31	44	51	64	73	101	123	132	160		
		1			32	44	72	83	104	95	125	142	211	289		
	750	-			24	29	41	48	60	68	95	116	125	152		
		1			27	38	61	71	89	82	108	122	182	249		

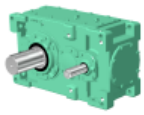

Size of Reducer										L.Speed Shaft Speed r/min	H.Speed Shaft Speed r/min	Nominal Reduction Ratio
9100	**9105**	**9110**	**9115**	**9118**	**9121**	**9126**	**9128**	**9131**	**9136**			
54.044	55.125	55.485	54.803	56.807	57.600	57.600	57.487	53.842	53.842	Exact Reduction Ratio		**56**
413	502	575	717	856	972	1130	1350			**32**	**1800**	
345	419	481	615	716	812	946	1130	1360	1600	**27**	**1500**	
277	336	386	494	575	652	759	909	1090	1290	**21**	**1200**	
231	281	322	413	480	545	635	760	916	1080	**18**	**1000**	
208	253	291	372	433	492	572	685	826	974	**16**	**900**	
174	212	243	311	362	411	478	572	690	814	**13**	**750**	
62.070	59.809	59.598	62.691	61.933	62.494	62.494	62.372	61.592	61.592	Exact Reduction Ratio		**63**
378	446	566	607	786	897	1040	1240			**29**	**1800**	
316	373	473	508	657	750	873	1040	1190	1410	**24**	**1500**	
253	299	380	408	528	602	701	839	960	1130	**19**	**1200**	
212	250	317	340	441	503	586	701	802	946	**16**	**1000**	
191	225	286	307	397	454	528	632	723	853	**14**	**900**	
159	188	239	256	332	379	441	528	604	713	**12**	**750**	
66.609	67.941	68.385	67.544	73.193	72.000	72.000	70.853	72.791	72.791	Exact Reduction Ratio		**71**
336	408	468	599	667	780	908	1100			**25**	**1800**	
281	341	391	501	558	652	759	922	1010	1190	**21**	**1500**	
225	274	314	402	448	524	610	740	814	961	**17**	**1200**	
188	229	262	336	374	438	509	618	681	803	**14**	**1000**	
170	206	236	303	337	394	459	557	613	724	**13**	**900**	
141	172	197	253	281	329	383	466	512	604	**11**	**750**	
C-154	C-154	C-154	C-154	C-156	C-156	C-156	C-158	C-158	C-158	Horizontal	Dimension Tables	
C-180	C-180	C-180	C-180	-	-	-	-	-	-	Vertical		
-	-	-	-	-	-	-	-	-	-	Upright		

Notes

1. Consult us when the high speed shaft speed is over 1800r/min.
2. When the high speed shaft speed is not shown in the table, find it by the interpolation method.
3. When the high speed shaft speed(N) is lower than 750r/min, find the mechanical power rating(P_N) according to the following formula.

$$P_N = P_{750} \times \frac{N}{750}$$

4. Shown in the table are the ratings for the slow speed shaft.
5. Refer to C136 - C143 for the allowable radial and axial load on each shaft.

Size of Reducer										Number of Cooling Fans	H.Speed Shaft Speed r/min	Nominal Reduction Ratio
9100	**9105**	**9110**	**9115**	**9118**	**9121**	**9126**	**9128**	**9131**	**9136**			
262	288	337	378	422	448	448	512	591	591	-	**1800**	Triple Reduction Horizontal Type **56 ▼ 71**
576	617	700	764	696	739	739	845	975	975	1		
258	283	329	370	413	443	443	509	592	592	-	**1500**	
504	539	610	664	681	731	731	840	977	977	1		
249	273	318	356	398	432	432	498	583	583	-	**1200**	
433	462	522	567	657	712	712	821	962	962	1		
241	264	306	342	384	418	418	484	570	570	-	**1000**	
371	395	445	483	633	690	690	799	940	940	1		
235	257	298	333	375	410	410	475	560	560	-	**900**	
346	369	415	451	618	676	676	784	924	924	1		
225	246	284	318	358	393	393	457	540	540	-	**750**	
301	320	361	391	591	648	648	754	891	891	1		
248	274	321	362							-	**1800**	Triple Reduction Vertical Type **56 ▼ 71**
247	272	318	357							-	**1500**	
242	266	309	347							-	**1200**	
235	258	299	335							-	**1000**	
230	252	293	328							-	**900**	
221	242	280	313							-	**750**	
										- 1	**1800**	Triple Reduction Upright Type **56 ▼ 71**
										- 1	**1500**	
										- 1	**1200**	
										- 1	**1000**	
										- 1	**900**	
										- 1	**750**	

Ambient Temperature °C	Temperature Correction Factor	
	Without Fan	With Fan
20	1.00	1.00
30	0.85	0.87
40	0.70	0.73
50	0.55	0.60

Notes

1. Shown in the table are the ratings for models without a fan cooling unit and those with a fan.
(-:none fan, 1:with a fan, 2:with two fans)
2. The values are applicable to continuous operation at ambient temperatures of 20 C or less. When the temperature in out of the range, refer to the temperature correction factor shown above.
3. When the high speed shaft speed is not shown in the table, find it by interpolation method.

MECHANICAL POWER RATING (kW)

Nominal Ratio	H.Speed Shaft Speed r/min	L.Speed Shaft Speed r/min	Size of Reducer													
			9015	9025	9030	9035	9040	9050	9055	9060	9070	9075	9080	9085	9090	9095
80	Exact Reduction Ratio					79.751			81.056			79.219		77.018	77.090	78.118
	1800	23			*	20.6	*	*	50	*	*	125	*	189	206	240
	1500	19			*	17.2	*	*	42	*	*	105	*	158	172	200
	1200	15			*	13.8	*	*	33	*	*	84	*	127	138	160
	1000	13			*	11.5	*	*	28.3	*	*	70	*	106	115	134
	900	11			*	10.4	*	*	25.5	*	*	63	*	95	104	121
	750	9.4			*	8.7	*	*	21.3	*	*	53	*	79	87	101
90	Exact Reduction Ratio					86.706			91.063			88.897		84.569		85.313
	1800	20			*	18.8	*	*	40	*	*	105	*	162	*	220
	1500	17			*	15.7	*	*	34	*	*	88	*	136	*	183
	1200	13			*	12.6	*	*	27.3	*	*	70	*	109	*	147
	1000	11			*	10.5	*	*	22.8	*	*	59	*	91	*	123
	900	10			*	9.4	*	*	20.5	*	*	53	*	82	*	111
	750	8.3			*	7.9	*	*	17.1	*	*	44	*	68	*	92
	Exact Reduction Ratio					C-150	C-150		C-150			C-152		C-152	C-154	C-154
						C-176	C-176		C-176			C-178		C-178	C-180	C-180
						C-192	C-192		C-192			C-194		C-194	-	-

THERMAL POWER RATING (kW)

Nominal Ratio	H.Speed Shaft Speed r/min	Number of Cooling Fans	Size of Reducer													
			9015	9025	9030	9035	9040	9050	9055	9060	9070	9075	9080	9085	9090	9095
Triple Reduction Horizontal Type 80 ▼ 90	1800	-				37	44		73			139		178	202	214
		1				79	109		177			238		479	479	490
	1500	-				36	43		70			134		173	198	209
		1				67	94		151			205		414	417	426
	1200	-				33	41		66			127		165	190	201
		1				55	79		126			173		351	356	363
	1000	-				31	39		62			121		158	183	193
		1				46	66		106			146		297	304	309
	900	-				30	38		60			117		153	178	188
		1				42	62		97			135		276	283	288
	750	-				28	35		56			111		145	170	179
		1				36	53		83			116		238	246	250
Triple Reduction Vertical Type 80 ▼ 90	1800	-				36	47		71			134		171	192	204
	1500	-				35	45		69			130		168	190	202
	1200	-				33	42		65			125		161	185	196
	1000	-				31	40		61			119		155	179	189
	900	-				29	38		59			116		151	175	185
	750	-				27	36		56			109		143	167	176
Triple Reduction Upright Type 80 ▼ 90	1800	-				37	53		73			139		178		
		1				79	129		177			238		479		
	1500	-				36	50		70			134		173		
		1				67	109		151			205		414		
	1200	-				33	47		66			127		165		
		1				55	91		126			173		351		
	1000	-				31	44		62			121		158		
		1				46	76		106			146		297		
	900	-				30	43		60			117		153		
		1				42	70		97			135		276		
	750	-				28	40		56			111		145		
		1				36	59		83			116		238		

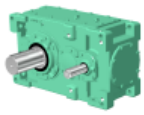

Size of Reducer										L.Speed Shaft Speed r/min	H.Speed Shaft Speed r/min	Nominal Reduction Ratio
9100	**9105**	**9110**	**9115**	**9118**	**9121**	**9126**	**9128**	**9131**	**9136**			
75.300	73.714	80.819	77.266	75.490	78.118	78.118	76.873			Exact Reduction Ratio		
298	363	397	495	647	720	839	1010			**23**	**1800**	
249	304	332	413	541	602	701	851			**19**	**1500**	
200	244	266	332	434	483	563	683			**15**	**1200**	**80**
167	203	222	277	363	404	470	571			**13**	**1000**	
150	183	200	250	327	364	424	514			**11**	**900**	
125	153	167	208	273	304	354	430			**9.4**	**750**	
	83.332		91.315	89.216	85.313	85.313	86.903			Exact Reduction Ratio		
*	322	*	420	549	661	769	902			**20**	**1800**	
*	269	*	351	459	552	643	754			**17**	**1500**	
*	216	*	281	368	443	516	605			**13**	**1200**	**90**
*	180	*	235	308	370	431	506			**11**	**1000**	
*	162	*	212	277	334	388	456			**10**	**900**	
*	135	*	177	231	278	324	380			**8.3**	**750**	
C-154	C-154	C-154	C-154	C-156	C-156	C-156	C-158			Exact Reduction Ratio		
C-180	C-180	C-180	C-180	-	-	-	-					
-	-	-	-	-	-	-	-					

Notes

1. Consult us when the high speed shaft speed is over 1800r/min.
2. When the high speed shaft speed is not shown in the table, find it by the interpolation method.
3. When the high speed shaft speed(N) is lower than 750r/min, find the mechanical power rating(P_N) according to the following formula.

$$P_N = P_{750} \times \frac{N}{750}$$

4. Shown in the table are the ratings for the slow speed shaft.
5. Refer to C136 - C143 for the allowable radial and axial load on each shaft.

Size of Reducer										Number of Cooling Fans	H.Speed Shaft Speed r/min	Nominal Reduction Ratio
9100	**9105**	**9110**	**9115**	**9118**	**9121**	**9126**	**9128**	**9131**	**9136**			
265	283	333	362	399	446	446	500			-	**1800**	Triple Reduction Horizontal Type **80 ▼ 90**
582	606	693	732	659	735	735	825			1		
260	278	326	354	389	441	441	495			-	**1500**	
510	530	604	636	642	727	727	817			1		
252	269	314	340	373	429	429	482			-	**1200**	
438	454	516	543	615	708	708	796			1		
243	259	302	327	358	415	415	468			-	**1000**	
374	388	440	462	591	685	685	772			1		
237	253	295	319	349	406	406	459			-	**900**	
350	362	411	431	576	670	670	757			1		
227	241	281	304	332	389	389	440			-	**750**	
304	315	357	374	548	642	642	726			1		
251	269	319	347							-	**1800**	Triple Reduction Vertical Type **80 ▼ 90**
250	268	315	343							-	**1500**	
244	261	306	332							-	**1200**	
237	253	296	321							-	**1000**	
233	248	290	314							-	**900**	
223	238	277	300							-	**750**	
										- 1	**1800**	Triple Reduction Upright Type **80 ▼ 90**
										- 1	**1500**	
										- 1	**1200**	
										- 1	**1000**	
										- 1	**900**	
										- 1	**750**	

Ambient Temperature °C	Temperature Correction Factor	
	Without Fan	With Fan
20	1.00	1.00
30	0.85	0.87
40	0.70	0.73
50	0.55	0.60

Notes

1. Shown in the table are the ratings for models without a fan cooling unit and those with a fan.
(-:none fan, 1:with a fan, 2:with two fans)
2. The values are applicable to continuous operation at ambient temperatures of 20 C or less. When the temperature in out of the range, refer to the temperature correction factor shown above.
3. When the high speed shaft speed is not shown in the table, find it by interpolation method.

MECHANICAL POWER RATING (kW)

Nominal Ratio	H.Speed Shaft Speed r/min	L.Speed Shaft Speed r/min	Size of Reducer													
			9015	9025	9030	9035	9040	9050	9055	9060	9070	9075	9080	9085	9090	9095
80	Exact Reduction Ratio				82.394		79.669	79.341		76.744	78.120		79.124			
	1800	23			15.3	*	25.0	32	*	50	82	*	134	*	*	*
	1500	19			12.8	*	20.9	27.2	*	41	68	*	111	*	*	*
	1200	15			10.3	*	16.7	21.7	*	33	54	*	89	*	*	*
	1000	13			8.6	*	13.9	18.1	*	27.9	45	*	74	*	*	*
	900	11			7.7	*	12.6	16.3	*	25.1	41	*	67	*	*	*
	750	9.4			6.4	*	10.5	13.6	*	20.9	34	*	55	*	*	*
90	Exact Reduction Ratio				88.813		90.908	90.326		89.427	87.529		87.269		88.471	
	1800	20			13.8	*	20.5	32	*	50	81	*	124	*	180	*
	1500	17			11.5	*	17.1	26.7	*	41	68	*	104	*	150	*
	1200	13			9.2	*	13.7	21.4	*	33	54	*	83	*	120	*
	1000	11			7.7	*	11.5	17.9	*	27.9	45	*	69	*	101	*
	900	10			6.9	*	10.3	16.1	*	25.1	41	*	62	*	91	*
	750	8.3			5.8	*	8.6	13.4	*	20.9	34	*	52	*	75	*
100	Exact Reduction Ratio				103.09	102.69	99.26	103.98	98.871	100.57	97.650	96.720	96.444	96.432	101.66	97.907
	1800	18			12.3	16.1	20.1	29.8	32	49	78	82	118	134	163	192
	1500	15			10.3	13.4	16.8	24.9	27.2	41	65	68	99	111	136	160
	1200	12			8.2	10.7	13.5	19.9	21.7	33	52	54	79	89	109	128
	1000	10			6.9	9.0	11.2	16.6	18.1	27.6	43	45	66	74	91	107
	900	9.0			6.2	8.1	10.1	15.0	16.3	24.9	39	41	59	67	82	96
	750	7.5			5.2	6.7	8.4	12.5	13.6	20.7	33	34	49	55	68	80
Dimension Tables		Horizontal			C-160	C-160	C-160	C-160	C-160	C-162	C-162	C-162	C-162	C-162	C-164	C-164
		Vertical			C-182	C-182	C-182	C-182	C-182	C-184	C-184	C-184	C-184	C-184	C-186	C-186
		Upright			C-196	C-196	C-196	C-196	C-196	C-198	C-198	C-198	C-198	C-198	-	-

THERMAL POWER RATING (kW)

Nominal Ratio	H.Speed Shaft Speed r/min	Number of Cooling Fans	Size of Reducer													
			9015	9025	9030	9035	9040	9050	9055	9060	9070	9075	9080	9085	9090	9095
Quadruple Reduction Horizontal Type 80 ▼ 100	1800	-			27	34	42	52	65	73	100	122	128	155	157	177
	1500	-			26	32	41	50	62	71	97	118	125	151	156	175
	1200	-			24	30	39	47	59	67	93	113	120	145	152	170
	1000	-			23	29	37	45	56	64	89	108	115	139	148	165
	900	-			22	28	36	44	54	62	86	105	112	135	145	162
	750	-			21	26	34	41	51	59	82	99	107	128	139	155
Quadruple Reduction Vertical Type 80 ▼ 100	1800	-			28	35	45	54	67	77	105	128	136	164	172	193
	1500	-			27	33	43	52	64	73	101	123	131	157	167	187
	1200	-			25	31	40	49	60	69	96	116	124	149	160	179
	1000	-			24	29	38	46	57	65	91	110	119	142	154	172
	900	-			23	28	37	45	55	63	88	107	115	138	150	167
	750	-			21	26	34	42	51	60	83	101	109	130	143	159
Quadruple Reduction Upright Type 80 ▼ 100	1800	-			27	34	47	52	65	74	101	124	130	157		
	1500	-			26	32	45	50	63	71	98	120	126	153		
	1200	-			25	31	43	48	59	68	93	114	121	146		
	1000	-			23	29	41	45	56	64	89	108	116	139		
	900	-			22	28	39	44	54	62	87	105	113	136		
	750	-			21	26	37	41	51	59	82	100	107	129		

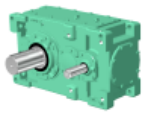

Size of Reducer										L.Speed Shaft Speed r/min	H.Speed Shaft Speed r/min	Nominal Reduction Ratio
9100	**9105**	**9110**	**9115**	**9118**	**9121**	**9126**	**9128**	**9131**	**9136**			
								80.205	80.205	Exact Reduction Ratio		**80**
*	*	*	*	*	*	*	*	1100	1210	**23**	**1800**	
*	*	*	*	*	*	*	*	922	1060	**19**	**1500**	
*	*	*	*	*	*	*	*	740	872	**15**	**1200**	
*	*	*	*	*	*	*	*	618	727	**13**	**1000**	
*	*	*	*	*	*	*	*	557	654	**11**	**900**	
*	*	*	*	*	*	*	*	465	545	**9.4**	**750**	
88.676		91.041						89.191	89.191	Exact Reduction Ratio		**90**
254	*	353	*	*	*	*	*	994	1170	**20**	**1800**	
212	*	295	*	*	*	*	*	831	980	**17**	**1500**	
170	*	237	*	*	*	*	*	667	786	**13**	**1200**	
142	*	198	*	*	*	*	*	557	657	**11**	**1000**	
128	*	178	*	*	*	*	*	502	592	**10**	**900**	
106	*	149	*	*	*	*	*	419	494	**8.3**	**750**	
101.85	98.135	97.789	102.87	96.134	101.59	101.59	98.178	102.03	102.03	Exact Reduction Ratio		**100**
232	274	348	373	465	556	648	800	871	1020	**18**	**1800**	
194	229	290	312	388	465	541	669	728	858	**15**	**1500**	
155	184	233	250	310	373	434	537	584	689	**12**	**1200**	
129	153	194	209	258	311	363	448	488	575	**10**	**1000**	
117	138	175	188	232	281	327	404	439	518	**9.0**	**900**	
97	115	146	157	194	234	273	337	367	433	**7.5**	**750**	
C-164	C-164	C-164	C-164	C-166	C-166	C-166	C-168	C-168	C-168	Horizontal	Dimension Tables	
C-186	C-186	C-186	C-186	-	-	-	-	-	-	Vertical		
-	-	-	-	-	-	-	-	-	-	Upright		

Notes

1. Consult us when the high speed shaft speed is over 1800r/min.
2. When the high speed shaft speed is not shown in the table, find it by the interpolation method.
3. When the high speed shaft speed(N) is lower than 750r/min, find the mechanical power rating(P_N) according to the following formula.

$$P_N = P_{750} \times \frac{N}{750}$$

4. Shown in the table are the ratings for the slow speed shaft.
5. Refer to C136 - C143 for the allowable radial and axial load on each shaft.

Size of Reducer										Number of Cooling Fans	H.Speed Shaft Speed r/min	Nominal Reduction Ratio
9100	**9105**	**9110**	**9115**	**9118**	**9121**	**9126**	**9128**	**9131**	**9136**			
204	230	271	299	328	392	392	425	521	521	-	**1800**	Quadruple Reduction Horizontal Type **80** ▼ **100**
203	228	268	295	322	386	386	422	515	515	-	**1500**	
199	223	261	286	311	374	374	413	502	502	-	**1200**	
193	217	253	277	300	362	362	402	487	487	-	**1000**	
190	213	248	271	293	354	354	395	478	478	-	**900**	
182	205	238	260	280	339	339	381	460	460	-	**750**	
225	252	294	323							-	**1800**	Quadruple Reduction Vertical Type **80** ▼ **100**
219	245	286	313							-	**1500**	
210	235	273	299							-	**1200**	
202	226	262	287							-	**1000**	
197	221	256	280							-	**900**	
188	211	244	267							-	**750**	
										-	**1800**	Quadruple Reduction Upright Type **80** ▼ **100**
										-	**1500**	
										-	**1200**	
										-	**1000**	
										-	**900**	
										-	**750**	

Ambient Temperature °C	Temperature Correction Factor	
	Without Fan	With Fan
20	1.00	1.00
30	0.85	0.87
40	0.70	0.73
50	0.55	0.60

Notes

1. Shown in the table are the ratings for models without a fan cooling unit and those with a fan.
(-:none fan, 1:with a fan, 2:with two fans)
2. The values are applicable to continuous operation at ambient temperatures of 20 C or less. When the temperature in out of the range, refer to the temperature correction factor shown above.
3. When the high speed shaft speed is not shown in the table, find it by interpolation method.

MECHANICAL POWER RATING (kW)

Nominal Ratio	H.Speed Shaft Speed r/min	L.Speed Shaft Speed r/min	Size of Reducer													
			9015	9025	9030	9035	9040	9050	9055	9060	9070	9075	9080	9085	9090	9095
112	Exact Reduction Ratio				111.12	111.65	113.26	118.37	111.08	117.19	109.41	108.54	106.37	105.89	110.59	112.80
	1800	16			11.1	14.6	16.5	24.5	32	38	65	82	102	130	144	174
	1500	13			9.2	12.2	13.8	20.4	27.2	32	54	68	85	108	120	145
	1200	11			7.4	9.8	11.0	16.4	21.8	26.0	43	54	68	87	97	116
	1000	8.9			6.2	8.2	9.2	13.7	18.1	21.7	36	45	57	72	80	97
	900	8.0			5.6	7.3	8.3	12.3	16.3	19.6	33	41	51	65	72	87
	750	6.7			4.6	6.1	6.9	10.3	13.6	16.3	27.5	34	43	54	60	73
125	Exact Reduction Ratio				127.97	128.49	122.72	130.09	129.57	125.30	127.97	120.90	126.39	117.54	127.07	122.38
	1800	14			9.9	12.9	16.3	23.9	31	39	60	82	90	124	131	154
	1500	12			8.3	10.7	13.6	19.9	26.6	33	50	68	75	104	109	128
	1200	9.6			6.6	8.6	10.9	16.0	21.3	26.6	40	54	60	83	87	103
	1000	8.0			5.5	7.2	9.1	13.3	17.8	22.2	33	45	50	69	73	86
	900	7.2			5.0	6.5	8.2	12.0	16.0	20.0	30	41	45	62	66	77
	750	6.0			4.2	5.4	6.8	10.0	13.4	16.7	25.2	34	38	52	55	64
140	Exact Reduction Ratio				137.94	139.69	140.03	148.10	145.56	146.01	143.38	135.67	139.40	129.07	138.24	141.00
	1800	13			8.9	11.7	13.4	19.6	25.6	31	50	69	78	107	116	139
	1500	11			7.4	9.8	11.2	16.4	21.4	26.1	41	58	65	89	97	116
	1200	8.6			6.0	7.8	8.9	13.1	17.1	20.9	33	46	52	71	77	93
	1000	7.1			5.0	6.5	7.5	10.9	14.3	17.5	28.0	38	43	59	64	78
	900	6.4			4.5	5.9	6.7	9.9	12.9	15.7	25.2	35	39	54	58	70
	750	5.4			3.7	4.9	5.6	8.2	10.7	13.1	21.0	29.2	32	45	48	58
Dimension Tables		Horizontal			C-160	C-160	C-160	C-160	C-160	C-162	C-162	C-162	C-162	C-162	C-164	C-164
		Vertical			C-182	C-182	C-182	C-182	C-182	C-184	C-184	C-184	C-184	C-184	C-186	C-186
		Upright			C-196	C-196	C-196	C-196	C-196	C-198	C-198	C-198	C-198	C-198	-	-

THERMAL POWER RATING (kW)

Nominal Ratio	H.Speed Shaft Speed r/min	Number of Cooling Fans	Size of Reducer													
			9015	9025	9030	9035	9040	9050	9055	9060	9070	9075	9080	9085	9090	9095
Quadruple Reduction Horizontal Type 112 ▼ 140	1800	-			25	31	40	50	61	70	95	117	122	150	151	164
	1500	-			24	30	38	48	59	68	92	113	119	146	149	162
	1200	-			23	28	36	45	56	64	88	108	114	139	145	157
	1000	-			22	27	35	43	53	61	84	103	109	134	141	152
	900	-			21	26	34	42	51	59	82	100	106	130	138	149
	750	-			20	24	32	39	48	56	77	95	101	124	132	142
Quadruple Reduction Vertical Type 112 ▼ 140	1800	-			27	33	42	52	64	73	100	122	129	158	164	177
	1500	-			25	31	40	50	61	70	96	117	124	151	159	172
	1200	-			24	29	37	47	57	66	90	111	118	144	152	164
	1000	-			22	27	35	44	54	62	86	105	112	137	146	157
	900	-			21	26	34	43	52	60	83	102	109	133	143	153
	750	-			20	24	32	40	49	57	79	96	103	126	136	146
Quadruple Reduction Upright Type 112 ▼ 140	1800	-			26	31	44	50	62	71	96	118	124	152		
	1500	-			25	30	43	48	59	68	93	114	120	147		
	1200	-			23	28	40	46	56	65	89	108	115	140		
	1000	-			22	27	38	43	53	61	84	103	110	134		
	900	-			21	26	37	42	51	60	82	100	107	131		
	750	-			20	24	35	39	48	56	78	95	102	124		

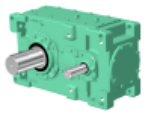

Size of Reducer										L.Speed Shaft Speed r/min	H.Speed Shaft Speed r/min	Nominal Reduction Ratio
9100	**9105**	**9110**	**9115**	**9118**	**9121**	**9126**	**9128**	**9131**	**9136**			
109.29	111.48	112.21	110.83	113.61	117.50	117.50	117.37	109.93	109.93	Exact Reduction Ratio		
206	251	287	368	433	482	561	671	809	954	**16**	**1800**	
172	209	240	308	362	403	469	561	676	797	**13**	**1500**	
138	168	192	247	290	323	376	450	542	640	**11**	**1200**	**112**
115	140	161	206	242	270	314	376	453	534	**8.9**	**1000**	
104	126	145	186	218	243	283	338	408	481	**8.0**	**900**	
86	105	121	155	182	203	236	283	341	402	**6.7**	**750**	
124.14	120.95	119.20	126.78	123.87	127.49	127.49	127.34	129.91	129.91	Exact Reduction Ratio		
191	223	286	304	397	445	518	619	686	810	**14**	**1800**	
159	186	239	253	332	371	432	517	573	676	**12**	**1500**	
127	149	191	203	266	298	347	415	460	542	**9.6**	**1200**	**125**
106	124	160	170	222	249	290	347	384	453	**8.0**	**1000**	
96	112	144	153	200	224	261	312	346	408	**7.2**	**900**	
80	94	120	127	167	187	218	261	289	341	**6.0**	**750**	
133.22	135.88	136.77	135.09	146.39	146.88	146.88	142.35	133.32	133.32	Exact Reduction Ratio		
170	206	236	303	337	387	450	555	669	789	**13**	**1800**	
141	172	197	253	281	323	376	464	559	659	**11**	**1500**	
113	138	158	203	226	259	301	372	448	529	**8.6**	**1200**	**140**
95	115	132	169	188	216	252	310	374	441	**7.1**	**1000**	
85	104	119	152	170	195	227	280	337	398	**6.4**	**900**	
71	86	99	127	142	162	189	233	281	332	**5.4**	**750**	
C-164	C-164	C-164	C-164	C-166	C-166	C-166	C-168	C-168	C-168	Horizontal	Dimension Tables	
C-186	C-186	C-186	C-186	-	-	-	-	-	-	Vertical		
-	-	-	-	-	-	-	-	-	-	Upright		

Notes

1. Consult us when the high speed shaft speed is over 1800r/min.
2. When the high speed shaft speed is not shown in the table, find it by the interpolation method.
3. When the high speed shaft speed(N) is lower than 750r/min, find the mechanical power rating(P_N) according to the following formula.

$$P_N = P_{750} \times \frac{N}{750}$$

4. Shown in the table are the ratings for the slow speed shaft.
5. Refer to C136 - C143 for the allowable radial and axial load on each shaft.

Size of Reducer										Number of Cooling Fans	H.Speed Shaft Speed r/min	Nominal Reduction Ratio
9100	**9105**	**9110**	**9115**	**9118**	**9121**	**9126**	**9128**	**9131**	**9136**			
198	218	256	287	321	372	372	413	502	502	-	**1800**	Quadruple Reduction Horizontal Type **112** ▼ **140**
196	216	252	282	314	365	365	406	493	493	-	**1500**	
192	210	245	273	303	352	352	394	476	476	-	**1200**	
187	204	237	264	292	340	340	381	461	461	-	**1000**	
183	200	232	258	285	333	333	373	451	451	-	**900**	
176	192	223	247	273	319	319	358	432	432	-	**750**	
216	237	276	307							-	**1800**	Quadruple Reduction Vertical Type **112** ▼ **140**
211	230	267	297							-	**1500**	
202	220	256	284							-	**1200**	
194	212	245	272							-	**1000**	
189	207	239	265							-	**900**	
181	197	228	253							-	**750**	
										-	**1800**	Quadruple Reduction Upright Type **112** ▼ **140**
										-	**1500**	
										-	**1200**	
										-	**1000**	
										-	**900**	
										-	**750**	

Ambient Temperature °C	Temperature Correction Factor	
	Without Fan	With Fan
20	1.00	1.00
30	0.85	0.87
40	0.70	0.73
50	0.55	0.60

Notes

1. Shown in the table are the ratings for models without a fan cooling unit and those with a fan.
(-:none fan, 1:with a fan, 2:with two fans)
2. The values are applicable to continuous operation at ambient temperatures of 20 C or less. When the temperature in out of the range, refer to the temperature correction factor shown above.
3. When the high speed shaft speed is not shown in the table, find it by interpolation method.

MECHANICAL POWER RATING (kW)

Nominal Ratio	H.Speed Shaft Speed r/min	L.Speed Shaft Speed r/min	Size of Reducer													
			9015	9025	9030	9035	9040	9050	9055	9060	9070	9075	9080	9085	9090	9095
160	Exact Reduction Ratio				165.49	159.50	159.92	158.68	162.11	154.58	153.94	158.44	158.25	154.04	168.71	152.98
	1800	11			7.7	10.4	12.6	17.4	25.5	26.6	44	63	71	95	99	123
	1500	9.4			6.4	8.7	10.5	14.5	21.3	22.2	37	53	59	79	82	103
	1200	7.5			5.1	6.9	8.4	11.6	17.1	17.8	29.9	42	47	64	66	82
	1000	6.3			4.3	5.8	7.0	9.7	14.2	14.8	24.9	35	39	53	55	69
	900	5.6			3.9	5.2	6.3	8.7	12.8	13.3	22.4	31	35	48	49	62
	750	4.7			3.2	4.3	5.3	7.2	10.7	11.1	18.7	26.6	29.7	40	41	51
180	Exact Reduction Ratio				178.38	173.41	182.48	180.65	182.13	180.12	172.48	177.79	174.54	169.14	183.53	187.20
	1800	10			6.9	9.4	10.3	16.1	20.5	25.4	41	53	62	82	87	105
	1500	8.3			5.8	7.9	8.6	13.4	17.1	21.2	34	44	52	68	73	88
	1200	6.7			4.6	6.3	6.9	10.8	13.7	17.0	27.9	35	42	54	58	70
	1000	5.6			3.9	5.3	5.7	9.0	11.4	14.2	23.3	29.7	35	45	49	59
	900	5.0			3.5	4.7	5.2	8.1	10.3	12.8	21.0	26.7	31	41	44	53
	750	4.2			2.9	4.0	4.3	6.7	8.6	10.7	17.5	22.3	26.4	34	36	44
200	Exact Reduction Ratio				205.43	206.26	197.71	207.95	197.74	202.57	192.43	190.60	192.89	192.86	210.89	203.11
	1800	9.0			6.2	8.0	10.2	15.0	17.4	24.7	40	44	59	71	79	93
	1500	7.5			5.2	6.7	8.5	12.5	14.5	20.6	33	37	49	59	66	78
	1200	6.0			4.1	5.4	6.8	10.0	11.6	16.5	26.8	29.9	39	47	53	62
	1000	5.0			3.5	4.5	5.7	8.4	9.7	13.8	22.4	24.9	33	39	44	52
	900	4.5			3.1	4.0	5.1	7.5	8.7	12.4	20.2	22.4	30	35	39	47
	750	3.8			2.6	3.4	4.3	6.3	7.3	10.3	16.8	18.7	25.0	29.7	33	39
Dimension Tables		Horizontal			C-160	C-160	C-160	C-160	C-160	C-162	C-162	C-162	C-162	C-162	C-164	C-164
		Vertical			C-182	C-182	C-182	C-182	C-182	C-184	C-184	C-184	C-184	C-184	C-186	C-186
		Upright			C-196	C-196	C-196	C-196	C-196	C-198	C-198	C-198	C-198	C-198	-	-

THERMAL POWER RATING (kW)

Nominal Ratio	H.Speed Shaft Speed r/min	Number of Cooling Fans	Size of Reducer													
			9015	9025	9030	9035	9040	9050	9055	9060	9070	9075	9080	9085	9090	9095
Quadruple Reduction Horizontal Type 160 ▼ 200	1800	-			23	29	36	42	52	61	85	103	109	131	138	154
	1500	-			22	28	34	40	49	58	81	98	105	126	134	149
	1200	-			20	26	32	37	46	55	76	92	99	118	127	142
	1000	-			19	24	30	35	43	51	72	87	93	112	121	135
	900	-			18	23	29	33	41	49	69	84	90	108	117	131
	750	-			17	21	27	31	38	46	65	78	85	101	111	123
Quadruple Reduction Vertical Type 160 ▼ 200	1800	-			24	30	37	43	53	63	88	106	113	136	145	162
	1500	-			23	28	35	41	50	60	83	101	108	129	139	155
	1200	-			21	26	33	38	46	56	78	94	101	121	131	146
	1000	-			20	24	31	35	43	52	73	88	95	114	124	138
	900	-			19	23	30	34	41	50	70	85	92	110	120	133
	750	-			17	21	27	31	38	47	66	79	86	103	113	125
Quadruple Reduction Upright Type 160 ▼ 200	1800	-			23	29	39	42	52	62	85	104	110	132		
	1500	-			22	28	37	40	49	59	81	99	105	126		
	1200	-			21	26	35	37	46	55	76	93	99	119		
	1000	-			19	24	33	35	43	51	72	87	94	112		
	900	-			18	23	32	33	41	50	69	84	91	108		
	750	-			17	21	30	31	38	46	65	79	85	102		

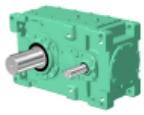

Size of Reducer										L.Speed Shaft Speed r/min	H.Speed Shaft Speed r/min	Nominal Reduction Ratio
9100	**9105**	**9110**	**9115**	**9118**	**9121**	**9126**	**9128**	**9131**	**9136**			
167.85	147.43	151.57	154.53	150.98	160.41	160.41	154.45	157.56	157.56	Exact Reduction Ratio		
141	183	226	250	327	355	413	512	567	669	**11**	**1800**	
118	153	188	208	273	296	345	428	474	559	**9.4**	**1500**	
94	123	151	167	219	237	276	343	380	448	**7.5**	**1200**	**160**
79	102	126	139	183	198	231	286	317	374	**6.3**	**1000**	
71	92	113	126	165	178	208	258	286	337	**5.6**	**900**	
59	77	95	105	137	149	173	215	238	281	**4.7**	**750**	
180.12	183.73	173.92	171.78	178.43	176.73	176.73	175.45	171.78	171.78	Exact Reduction Ratio		
126	153	186	239	277	322	375	451	521	614	**10**	**1800**	
105	127	155	199	231	269	313	377	435	513	**8.3**	**1500**	
84	102	125	160	185	216	251	302	349	411	**6.7**	**1200**	**180**
70	85	104	133	155	180	209	252	291	343	**5.6**	**1000**	
63	77	94	120	139	162	189	227	262	309	**5.0**	**900**	
53	64	78	100	116	135	157	190	219	258	**4.2**	**750**	
206.87	199.34	198.63	196.51	191.99	193.01	193.01	190.35	203.02	203.02	Exact Reduction Ratio		
115	136	173	197	258	295	344	416	442	521	**9.0**	**1800**	
96	113	144	164	215	246	287	348	369	435	**7.5**	**1500**	
77	91	115	132	172	198	230	279	296	349	**6.0**	**1200**	**200**
64	76	96	110	144	165	192	233	247	291	**5.0**	**1000**	
58	68	87	99	130	148	173	210	222	262	**4.5**	**900**	
48	57	72	82	108	124	144	175	185	219	**3.8**	**750**	
C-164	C-164	C-164	C-164	C-166	C-166	C-166	C-168	C-168	C-168	Horizontal	Dimension Tables	
C-186	C-186	C-186	C-186	-	-	-	-	-	-	Vertical		
-	-	-	-	-	-	-	-	-	-	Upright		

Notes

1. Consult us when the high speed shaft speed is over 1800r/min.
2. When the high speed shaft speed is not shown in the table, find it by the interpolation method.
3. When the high speed shaft speed(N) is lower than 750r/min, find the mechanical power rating(P_N) according to the following formula.

$$P_N = P_{750} \times \frac{N}{750}$$

4. Shown in the table are the ratings for the slow speed shaft.
5. Refer to C136 - C143 for the allowable radial and axial load on each shaft.

Size of Reducer										Number of Cooling Fans	H.Speed Shaft Speed r/min	Nominal Reduction Ratio
9100	**9105**	**9110**	**9115**	**9118**	**9121**	**9126**	**9128**	**9131**	**9136**			
180	202	236	269	297	360	360	393	480	480	-	**1800**	Quadruple Reduction Horizontal Type **160 ▼ 200**
175	196	229	262	288	351	351	385	467	467	-	**1500**	
167	187	218	250	275	337	337	373	449	449	-	**1200**	
160	179	207	240	263	325	325	361	432	432	-	**1000**	
155	174	201	234	256	317	317	353	422	422	-	**900**	
147	164	190	222	243	303	303	339	403	403	-	**750**	
190	213	247	283							-	**1800**	Quadruple Reduction Vertical Type **160 ▼ 200**
183	204	237	272							-	**1500**	
173	193	223	258							-	**1200**	
164	183	212	246							-	**1000**	
159	177	205	239							-	**900**	
150	167	193	226							-	**750**	
										-	**1800**	Quadruple Reduction Upright Type **160 ▼ 200**
										-	**1500**	
										-	**1200**	
										-	**1000**	
										-	**900**	
										-	**750**	

Ambient Temperature °C	Temperature Correction Factor	
	Without Fan	With Fan
20	1.00	1.00
30	0.85	0.87
40	0.70	0.73
50	0.55	0.60

Notes

1. Shown in the table are the ratings for models without a fan cooling unit and those with a fan.
(-:none fan, 1:with a fan, 2:with two fans)
2. The values are applicable to continuous operation at ambient temperatures of 20 C or less. When the temperature in out of the range, refer to the temperature correction factor shown above.
3. When the high speed shaft speed is not shown in the table, find it by interpolation method.

MECHANICAL POWER RATING (kW)

Nominal Ratio	H.Speed Shaft Speed r/min	L.Speed Shaft Speed r/min	Size of Reducer													
			9015	9025	9030	9035	9040	9050	9055	9060	9070	9075	9080	9085	9090	9095
224	Exact Reduction Ratio				221.43	224.24	225.60	236.74	222.15	236.05	215.61	213.88	212.75	211.77	229.41	234.00
	1800	8.0			5.6	7.3	8.3	12.3	16.8	19.4	33	44	51	65	70	84
	1500	6.7			4.7	6.1	6.9	10.3	14.0	16.2	27.9	37	43	54	58	70
	1200	5.4			3.7	4.9	5.6	8.2	11.3	13.0	22.4	29.6	34	44	47	56
	1000	4.5			3.1	4.1	4.6	6.9	9.4	10.8	18.7	24.7	28.8	36	39	47
	900	4.0			2.8	3.7	4.2	6.2	8.5	9.8	16.8	22.3	25.9	33	35	42
	750	3.3			2.3	3.1	3.5	5.2	7.1	8.1	14.0	18.6	21.6	27.6	29.5	35
250	Exact Reduction Ratio					256.04		260.18	259.14	252.38	252.17	238.24	252.78	235.08	263.61	253.88
	1800	7.2				6.5		12.0	16.0	19.8	30	42	45	62	63	74
	1500	6.0				5.4		10.0	13.4	16.6	25.6	35	38	52	53	62
	1200	4.8				4.3		8.0	10.7	13.3	20.5	28.3	30	42	42	50
	1000	4.0				3.6		6.7	8.9	11.1	17.1	23.6	25.5	35	35	41
	900	3.6				3.3		6.0	8.0	10.0	15.4	21.3	22.9	31	32	37
	750	3.0				2.7		5.0	6.7	8.3	12.8	17.8	19.1	26.4	26.7	31
280	Exact Reduction Ratio					278.37		296.20	291.13	294.09	282.55	267.35	278.80	258.13	286.77	292.50
	1800	6.4				5.9		9.9	12.9	15.6	25.6	35	39	54	56	67
	1500	5.4				4.9		8.2	10.7	13.0	21.3	29.6	32	45	47	56
	1200	4.3				3.9		6.6	8.6	10.4	17.1	23.7	26.4	36	37	45
	1000	3.6				3.3		5.5	7.2	8.7	14.3	19.8	22.0	30	31	37
	900	3.2				3.0		4.9	6.5	7.8	12.8	17.8	19.8	27.1	28.3	34
	750	2.7				2.5		4.1	5.4	6.5	10.7	14.9	16.5	22.6	23.6	28.5
Dimension Tables		Horizontal			C-160	C-160	C-160	C-160	C-160	C-162	C-162	C-162	C-162	C-162	C-164	C-164
		Vertical			C-182	C-182	C-182	C-182	C-182	C-184	C-184	C-184	C-184	C-184	C-186	C-186
		Upright			C-196	C-196	C-196	C-196	C-196	C-198	C-198	C-198	C-198	C-198	-	-

THERMAL POWER RATING (kW)

Nominal Ratio	H.Speed Shaft Speed r/min	Number of Cooling Fans	Size of Reducer													
			9015	9025	9030	9035	9040	9050	9055	9060	9070	9075	9080	9085	9090	9095
Quadruple Reduction Horizontal Type 224 ▼ 280	1800	-			23	27	35	40	49	59	80	99	104	127	132	142
	1500	-			22	25	33	38	47	56	77	94	99	121	127	137
	1200	-			20	24	31	36	43	52	72	88	94	114	121	130
	1000	-			19	22	29	33	41	49	68	83	89	108	115	124
	900	-			18	21	28	32	39	47	66	80	86	104	112	120
	750	-			17	20	26	30	36	44	61	75	80	98	106	114
Quadruple Reduction Vertical Type 224 ▼ 280	1800	-			24	28	36	42	51	60	83	102	107	131	138	149
	1500	-			22	26	34	39	48	57	79	96	102	124	132	142
	1200	-			21	24	32	36	44	53	74	90	96	116	125	134
	1000	-			19	22	30	34	41	50	69	84	90	110	118	127
	900	-			18	21	29	32	39	48	67	81	87	106	114	123
	750	-			17	20	27	30	36	44	62	76	81	99	107	115
Quadruple Reduction Upright Type 224 ▼ 280	1800	-			23	27	38	41	50	59	81	99	104	127		
	1500	-			22	25	36	38	47	56	77	95	100	122		
	1200	-			20	24	34	36	44	52	72	89	94	115		
	1000	-			19	22	32	33	41	49	68	83	89	108		
	900	-			18	21	30	32	39	47	66	80	86	105		
	750	-			17	20	28	30	36	44	62	75	81	98		

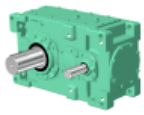

Size of Reducer										L.Speed Shaft Speed r/min	H.Speed Shaft Speed r/min	Nominal Reduction Ratio
9100	**9105**	**9110**	**9115**	**9118**	**9121**	**9126**	**9128**	**9131**	**9136**			
222.00	226.44	227.92	225.12	226.90	230.40	230.40	223.56	232.24	232.24	Exact Reduction Ratio		**224**
102	124	142	183	218	248	288	355	387	456	**8.0**	**1800**	
85	104	119	152	182	207	241	297	323	381	**6.7**	**1500**	
68	83	95	122	146	166	193	238	259	305	**5.4**	**1200**	
57	69	79	102	122	138	161	198	216	255	**4.5**	**1000**	
51	62	71	92	110	124	145	179	194	229	**4.0**	**900**	
43	52	60	76	91	104	121	149	162	191	**3.3**	**750**	
252.16	245.68	242.12	257.52	251.60	251.62	251.62	242.56	247.46	247.46	Exact Reduction Ratio		**250**
94	110	142	150	197	227	264	328	363	428	**7.2**	**1800**	
79	92	118	126	165	189	221	274	303	357	**6.0**	**1500**	
63	74	95	101	132	152	177	219	243	287	**4.8**	**1200**	
52	61	79	84	110	127	147	183	203	239	**4.0**	**1000**	
47	55	71	75	99	114	133	165	182	215	**3.6**	**900**	
39	46	59	63	83	95	111	137	152	180	**3.0**	**750**	
270.60	276.01	277.82	274.40	276.57	288.00	288.00	275.54	283.08	283.08	Exact Reduction Ratio		**280**
84	102	117	150	179	199	231	289	318	375	**6.4**	**1800**	
70	85	98	125	150	166	193	241	265	313	**5.4**	**1500**	
56	68	78	100	120	133	155	193	212	251	**4.3**	**1200**	
47	57	65	84	100	111	129	161	177	209	**3.6**	**1000**	
42	51	59	75	90	100	116	145	160	188	**3.2**	**900**	
35	42	49	63	75	83	97	121	133	157	**2.7**	**750**	
C-164	C-164	C-164	C-164	C-166	C-166	C-166	C-168	C-168	C-168	Horizontal	Dimension Tables	
C-186	C-186	C-186	C-186	-	-	-	-	-	-	Vertical		
-	-	-	-	-	-	-	-	-	-	Upright		

Notes

1. Consult us when the high speed shaft speed is over 1800r/min.
2. When the high speed shaft speed is not shown in the table, find it by the interpolation method.
3. When the high speed shaft speed(N) is lower than 750r/min, find the mechanical power rating(P_N) according to the following formula.

$$P_N = P_{750} \times \frac{N}{750}$$

4. Shown in the table are the ratings for the slow speed shaft.
5. Refer to C136 - C143 for the allowable radial and axial load on each shaft.

Size of Reducer										Number of Cooling Fans	H.Speed Shaft Speed r/min	Nominal Reduction Ratio
9100	**9105**	**9110**	**9115**	**9118**	**9121**	**9126**	**9128**	**9131**	**9136**			
174	190	222	247	275	322	322	366	443	443	-	**1800**	Quadruple Reduction Horizontal Type **224 ▼ 280**
169	184	215	239	265	311	311	356	430	430	-	**1500**	
161	176	204	227	251	296	296	341	411	411	-	**1200**	
154	168	195	216	239	283	283	328	395	395	-	**1000**	
150	163	189	210	232	275	275	319	384	384	-	**900**	
142	155	179	198	219	261	261	304	366	366	-	**750**	
183	200	232	257							-	**1800**	Quadruple Reduction Vertical Type **224 ▼ 280**
176	192	222	246							-	**1500**	
166	181	209	232							-	**1200**	
158	172	199	220							-	**1000**	
153	167	192	213							-	**900**	
144	157	181	201							-	**750**	
										-	**1800**	Quadruple Reduction Upright Type **224 ▼ 280**
										-	**1500**	
										-	**1200**	
										-	**1000**	
										-	**900**	
										-	**750**	

Ambient Temperature °C	Temperature Correction Factor	
	Without Fan	With Fan
20	1.00	1.00
30	0.85	0.87
40	0.70	0.73
50	0.55	0.60

Notes

1. Shown in the table are the ratings for models without a fan cooling unit and those with a fan.
(-:none fan, 1:with a fan, 2:with two fans)
2. The values are applicable to continuous operation at ambient temperatures of 20 C or less. When the temperature in out of the range, refer to the temperature correction factor shown above.
3. When the high speed shaft speed is not shown in the table, find it by interpolation method.

MECHANICAL POWER RATING (kW)

Nominal Ratio	H.Speed Shaft Speed r/min	L.Speed Shaft Speed r/min	Size of Reducer													
			9015	9025	9030	9035	9040	9050	9055	9060	9070	9075	9080	9085	9090	9095
315	Exact Reduction Ratio							315.95	324.22	327.89	324.10	312.22	318.63	308.07	313.18	317.35
	1800	5.7						9.2	12.8	14.0	22.3	32	34	48	51	60
	1500	4.8						7.7	10.7	11.7	18.6	27.0	28.9	40	43	50
	1200	3.8						6.2	8.6	9.4	14.9	21.6	23.1	32	34	40
	1000	3.2						5.2	7.1	7.8	12.4	18.1	19.3	26.8	28.8	33
	900	2.9						4.6	6.4	7.0	11.2	16.3	17.4	24.2	25.9	30
	750	2.4						3.9	5.4	5.9	9.3	13.6	14.5	20.2	21.6	25.2
355	Exact Reduction Ratio							367.08	364.25	364.33	345.71	350.36	355.25	338.28	359.23	346.58
	1800	5.1						8.0	10.3	12.6	20.9	27.1	31	41	45	55
	1500	4.2						6.6	8.6	10.5	17.5	22.6	25.9	34	37	45
	1200	3.4						5.3	6.9	8.4	14.0	18.1	20.7	27.6	30	36
	1000	2.8						4.4	5.7	7.0	11.7	15.1	17.3	23.0	25.1	30
	900	2.5						4.0	5.2	6.3	10.5	13.6	15.6	20.7	22.6	27.6
	750	2.1						3.3	4.3	5.3	8.8	11.4	13.0	17.3	18.9	23.0
400	Exact Reduction Ratio							400.89	388.53	421.41	401.65	401.88	394.72	386.60	383.18	397.55
	1800	4.5						7.3	9.7	10.9	18.0	23.7	28.0	36	42	48
	1500	3.8						6.1	8.1	9.1	15.0	19.8	23.3	30	35	40
	1200	3.0						4.9	6.5	7.3	12.1	15.8	18.7	24.2	28.3	32
	1000	2.5						4.1	5.4	6.1	10.1	13.2	15.6	20.2	23.6	26.8
	900	2.3						3.7	4.8	5.5	9.1	11.9	14.0	18.2	21.2	24.1
	750	1.9						3.1	4.0	4.6	7.5	9.9	11.7	15.1	17.7	20.1
Dimension Tables		Horizontal						C-160	C-160	C-162	C-162	C-162	C-162	C-162	C-164	C-164
		Vertical						C-182	C-182	C-184	C-184	C-184	C-184	C-184	C-186	C-186
		Upright						C-196	C-196	C-198	C-198	C-198	C-198	C-198	-	-

THERMAL POWER RATING (kW)

Nominal Ratio	H.Speed Shaft Speed r/min	Number of Cooling Fans	Size of Reducer													
			9015	9025	9030	9035	9040	9050	9055	9060	9070	9075	9080	9085	9090	9095
Quadruple Reduction Horizontal Type 315 ▼ 400	1800	-						41	47	57	80	93	103	120	133	142
	1500	-						39	45	54	76	89	99	115	128	137
	1200	-						36	42	51	72	83	93	108	122	130
	1000	-						34	39	48	67	79	88	102	116	124
	900	-						33	37	46	65	76	85	99	113	120
	750	-						30	35	42	61	71	80	93	106	113
Quadruple Reduction Vertical Type 315 ▼ 400	1800	-						42	49	59	82	96	107	124	139	148
	1500	-						40	46	56	78	91	101	118	133	142
	1200	-						37	42	52	73	85	95	110	125	134
	1000	-						34	39	48	68	80	89	104	119	127
	900	-						33	38	46	66	77	86	100	115	122
	750	-						31	35	43	61	72	81	94	108	115
Quadruple Reduction Upright Type 315 ▼ 400	1800	-						41	48	58	81	94	104	121		
	1500	-						39	45	55	77	89	99	116		
	1200	-						36	42	51	72	84	93	109		
	1000	-						34	39	48	68	79	88	103		
	900	-						33	37	46	65	76	85	99		
	750	-						30	35	42	61	71	80	93		

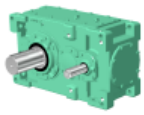

Size of Reducer										L.Speed Shaft Speed r/min	H.Speed Shaft Speed r/min	Nominal Reduction Ratio
9100	**9105**	**9110**	**9115**	**9118**	**9121**	**9126**	**9128**	**9131**	**9136**			
305.90	299.46	328.33	313.90	316.08	314.53	314.53	298.95	323.52	323.52	Exact Reduction Ratio		**315**
74	91	99	124	157	182	212	266	278	328	**5.7**	**1800**	
62	76	83	103	131	152	177	222	232	274	**4.8**	**1500**	
49	60	66	83	105	122	142	178	186	220	**3.8**	**1200**	
41	50	55	69	88	101	118	149	155	183	**3.2**	**1000**	
37	45	50	62	79	91	106	134	140	165	**2.9**	**900**	
31	38	41	52	66	76	89	112	117	138	**2.4**	**750**	
349.61	338.53	375.23	370.97	362.44	341.25	341.25	355.99			Exact Reduction Ratio		**355**
65	80	87	105	137	168	195	224			**5.1**	**1800**	
54	67	72	87	114	140	163	187			**4.2**	**1500**	
43	53	58	70	92	112	131	150			**3.4**	**1200**	
36	45	48	58	76	93	109	125			**2.8**	**1000**	
32	40	43	52	69	84	98	112			**2.5**	**900**	
27.4	33	36	44	57	70	82	94			**2.1**	**750**	
389.79	386.90	418.36	423.96	414.22	391.44	391.44	386.24			Exact Reduction Ratio		**400**
58	70	78	92	120	146	170	207			**4.5**	**1800**	
49	59	65	76	100	122	142	172			**3.8**	**1500**	
39	47	52	61	80	98	114	138			**3.0**	**1200**	
32	39	43	51	67	81	95	115			**2.5**	**1000**	
29.5	35	39	46	60	73	85	104			**2.3**	**900**	
24.6	29.6	32	38	50	61	71	86			**1.9**	**750**	
C-164	C-164	C-164	C-164	C-166	C-166	C-166	C-168	C-168	C-168	Horizontal	Dimension Tables	
C-186	C-186	C-186	C-186	-	-	-	-	-	-	Vertical		
-	-	-	-	-	-	-	-	-	-	Upright		

Notes

1. Consult us when the high speed shaft speed is over 1800r/min.
2. When the high speed shaft speed is not shown in the table, find it by the interpolation method.
3. When the high speed shaft speed(N) is lower than 750r/min, find the mechanical power rating(P_N) according to the following formula.

$$P_N = P_{750} \times \frac{N}{750}$$

4. Shown in the table are the ratings for the slow speed shaft.
5. Refer to C136 - C143 for the allowable radial and axial load on each shaft.

Size of Reducer										Number of Cooling Fans	H.Speed Shaft Speed r/min	Nominal Reduction Ratio
9100	**9105**	**9110**	**9115**	**9118**	**9121**	**9126**	**9128**	**9131**	**9136**			
172	187	215	237	260	316	316	353	433	433	-	**1800**	Quadruple Reduction Horizontal Type **315** ▼ **400**
166	181	207	229	250	304	304	342	419	419	-	**1500**	
158	173	197	217	237	289	289	327	400	400	-	**1200**	
151	165	188	207	226	275	275	313	383	383	-	**1000**	
147	160	182	201	219	267	267	305	372	372	-	**900**	
139	152	172	190	207	253	253	289	354	354	-	**750**	
180	196	223	246							-	**1800**	Quadruple Reduction Vertical Type **315** ▼ **400**
172	188	214	235							-	**1500**	
163	178	201	222							-	**1200**	
154	169	191	211							-	**1000**	
150	164	185	204							-	**900**	
141	154	174	192							-	**750**	
										-	**1800**	Quadruple Reduction Upright Type **315** ▼ **400**
										-	**1500**	
										-	**1200**	
										-	**1000**	
										-	**900**	
										-	**750**	

Ambient Temperature °C	Temperature Correction Factor	
	Without Fan	With Fan
20	1.00	1.00
30	0.85	0.87
40	0.70	0.73
50	0.55	0.60

Notes

1. Shown in the table are the ratings for models without a fan cooling unit and those with a fan.
(-:none fan, 1:with a fan, 2:with two fans)
2. The values are applicable to continuous operation at ambient temperatures of 20 C or less. When the temperature in out of the range, refer to the temperature correction factor shown above.
3. When the high speed shaft speed is not shown in the table, find it by interpolation method.

MECHANICAL POWER RATING (kW)

Nominal Ratio	H.Speed Shaft Speed r/min	L.Speed Shaft Speed r/min	Size of Reducer													
			9015	9025	9030	9035	9040	9050	9055	9060	9070	9075	9080	9085	9090	9095
450	Exact Reduction Ratio								451.41			428.68		431.03		424.05
	1800	4.0							8.3			22.2		32		45
	1500	3.3							6.9			18.5		27.1		37
	1200	2.7							5.6			14.8		21.7		30
	1000	2.2							4.6			12.4		18.1		25.1
	900	2.0							4.2			11.1		16.3		22.6
	750	1.7							3.5			9.3		13.6		18.9
500	Exact Reduction Ratio								492.99			498.04		478.93		
	1800	3.6							7.6			19.1		29.2		
	1500	3.0							6.4			16.0		24.4		
	1200	2.4							5.1			12.8		19.5		
	1000	2.0							4.2			10.7		16.3		
	900	1.8							3.8			9.6		14.7		
	750	1.5							3.2			8.0		12.2		
Dimension Tables		Horizontal							C-160			C-162		C-162		C-164
		Vertical							C-182			C-184		C-184		C-186
		Upright							C-196			C-198		C-198		-

THERMAL POWER RATING (kW)

Nominal Ratio	H.Speed Shaft Speed r/min	Number of Cooling Fans	Size of Reducer													
			9015	9025	9030	9035	9040	9050	9055	9060	9070	9075	9080	9085	9090	9095
Quadruple Reduction Horizontal Type 450 ▼ 500	1800	-							49			92		120		143
	1500	-							47			88		115		138
	1200	-							43			82		108		131
	1000	-							40			77		102		125
	900	-							39			74		98		121
	750	-							36			69		92		114
Quadruple Reduction Vertical Type 450 ▼ 500	1800	-							50			94		123		149
	1500	-							48			89		117		143
	1200	-							44			83		109		134
	1000	-							41			78		103		127
	900	-							39			75		99		123
	750	-							36			70		93		116
Quadruple Reduction Upright Type 450 ▼ 500	1800	-							49			92		120		
	1500	-							47			88		115		
	1200	-							43			82		108		
	1000	-							41			77		102		
	900	-							39			74		98		
	750	-							36			69		92		

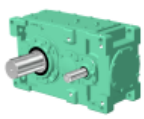

Size of Reducer										L.Speed Shaft Speed r/min	H.Speed Shaft Speed r/min	Nominal Reduction Ratio
9100	**9105**	**9110**	**9115**	**9118**	**9121**	**9126**	**9128**	**9131**	**9136**			
	431.36		472.69	461.82						Exact Reduction Ratio		
	63		82	108						**4.0**	**1800**	
	52		69	90						**3.3**	**1500**	
	42		55	72						**2.7**	**1200**	**450**
	35		46	60						**2.2**	**1000**	
	31		41	54						**2.0**	**900**	
	26.6		34	45						**1.7**	**750**	
										Exact Reduction Ratio		
										3.6	**1800**	
										3.0	**1500**	
										2.4	**1200**	**500**
										2.0	**1000**	
										1.8	**900**	
										1.5	**750**	
	C-164		C-164	C-166						Horizontal	Dimension Tables	
	C-186		C-186	-						Vertical		
	-		-	-						Upright		

Notes

1. Consult us when the high speed shaft speed is over 1800r/min.
2. When the high speed shaft speed is not shown in the table, find it by the interpolation method.
3. When the high speed shaft speed(N) is lower than 750r/min, find the mechanical power rating(P_N) according to the following formula.

$$P_N = P_{750} \times \frac{N}{750}$$

4. Shown in the table are the ratings for the slow speed shaft.
5. Refer to C136 - C143 for the allowable radial and axial load on each shaft.

Size of Reducer										Number of Cooling Fans	H.Speed Shaft Speed r/min	Nominal Reduction Ratio
9100	**9105**	**9110**	**9115**	**9118**	**9121**	**9126**	**9128**	**9131**	**9136**			
	184		233	256						-	**1800**	Quadruple Reduction Horizontal Type **450 ▼ 500**
	178		225	246						-	**1500**	
	170		213	233						-	**1200**	
	162		203	221						-	**1000**	
	157		196	214						-	**900**	
	148		185	202						-	**750**	
	192		241							-	**1800**	Quadruple Reduction Vertical Type **450 ▼ 500**
	184		231							-	**1500**	
	174		217							-	**1200**	
	165		206							-	**1000**	
	160		199							-	**900**	
	151		188							-	**750**	
										-	**1800**	Quadruple Reduction Upright Type **450 ▼ 500**
										-	**1500**	
										-	**1200**	
										-	**1000**	
										-	**900**	
										-	**750**	

Ambient Temperature °C	Temperature Correction Factor	
	Without Fan	With Fan
20	1.00	1.00
30	0.85	0.87
40	0.70	0.73
50	0.55	0.60

Notes

1. Shown in the table are the ratings for models without a fan cooling unit and those with a fan.
(-:none fan, 1:with a fan, 2:with two fans)
2. The values are applicable to continuous operation at ambient temperatures of 20 C or less. When the temperature in out of the range, refer to the temperature correction factor shown above.
3. When the high speed shaft speed is not shown in the table, find it by interpolation method.

Allowable Radial Load

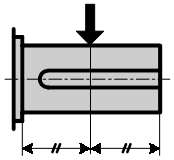

Sheet1

Aplicable to configurations : Double Redcution RR,LL/

	L.Speed Shaft Speed r/min	Size of Reducer															
		9015	9025	9030	9035	9045	9050	9055	9060	9070	9075	9080	9085	9090	9095	9100	9105
Standard bearing model	250	12.8	22.1	17.7	29.4	38.7	37.8	46.6	39.7	44.1	109.9	76.5	112.8	100.1	137.8	139.8	192.3
	160	14.7	24.0	20.1	31.4	41.2	39.7	48.1	41.7	46.1	110.4	85.8	113.3	108.9	145.7	157.5	200.6
	100	16.2	23.5	25.0	37.8	49.1	47.1	53.5	47.6	54.4	119.2	99.1	127.0	122.1	147.6	166.3	183.9
	63	16.2	23.1	29.9	42.2	58.4	55.9	62.3	58.9	65.2	146.7	125.6	156.0	125.6	143.7	165.3	178.1
	40	16.2	23.1	35.3	42.2	66.7	67.2	75.0	71.1	79.0	178.1	161.9	197.2	125.1	137.8	164.8	173.6
	<=25	15.7	23.1	42.2	41.2	80.4	79.0	90.3	86.8	99.1	218.8	208.0	236.9	122.6	135.4	163.3	167.3
Heavy duty bearing model	250								71.1	70.1	155.5	122.6	158.9	141.8	158.9	181.0	213.9
	160								78.0	77.5	158.9	137.3	162.4	132.4	151.6	174.6	200.6
	100								81.4	92.2	171.7	149.6	178.5	127.0	147.6	166.8	183.9
	63								81.4	114.8	206.5	149.1	214.8	125.6	143.7	165.8	178.1
	40								81.4	117.7	231.5	148.6	236.9	125.1	137.8	165.3	173.6
	<=25								81.4	117.7	231.5	147.2	236.9	122.6	135.4	163.8	167.3

Sheet2

Applicable to configurations : Double Reduction RL,LR/

	L.Speed Shaft Speed r/min	Size of Reducer															
		9015	9025	9030	9035	9045	9050	9055	9060	9070	9075	9080	9085	9090	9095	9100	9105
Standard bearing model	250	8.3	15.2	9.8	21.6	28.4	22.6	31.4	16.7	17.2	86.8	43.7	80.4	58.4	97.6	80.4	131.5
	160	9.8	18.6	12.3	23.1	29.4	24.0	31.4	18.1	17.7	85.3	52.5	79.5	64.3	103.0	96.1	138.3
	100	13.7	23.5	16.7	29.4	37.3	28.4	35.3	22.1	25.5	92.2	62.8	92.2	74.6	110.9	105.9	146.7
	63	16.7	28.4	21.6	36.3	47.1	37.3	42.7	33.4	33.8	117.2	89.3	118.2	104.5	148.1	153.5	200.1
	40	21.1	35.3	27.0	43.7	54.4	48.6	55.4	45.1	47.6	149.1	125.6	158.9	146.7	172.2	203.6	235.4
	<=25	24.5	36.3	34.3	50.5	68.7	61.8	70.1	60.8	67.7	171.9	171.2	211.4	171.2	171.2	215.3	304.1
Heavy duty bearing model	250								46.1	40.2	133.9	89.8	127.5	114.8	156.0	150.6	213.4
	160								52.0	45.6	135.4	103.5	128.0	125.1	164.8	170.7	223.2
	100								60.3	59.4	145.7	115.8	143.7	140.8	176.1	187.4	236.9
	63								81.4	80.0	171.9	152.5	176.6	174.1	186.9	218.8	301.7
	40								81.4	108.9	171.9	191.8	224.6	191.8	193.7	241.8	304.1
	<=25								81.4	117.7	171.9	180.5	230.3	171.2	171.2	214.8	304.1

Allowable Axial Load

	L.Speed Shaft Speed r/min	Size of Reducer															
		9015	9025	9030	9035	9045	9050	9055	9060	9070	9075	9080	9085	9090	9095	9100	9105
Standard bearing model	250	9.3	11.4	14.7	23.1	35.3	32.9	31.9	27.0	28.0	45.6	23.5	42.7	31.4	52.0	45.1	50.0
	160	9.3	11.4	18.1	23.1	35.3	33.4	31.9	28.9	28.4	45.1	27.5	42.2	34.3	53.0	53.0	49.5
	100	9.3	11.4	24.5	23.1	35.3	37.3	31.9	34.3	39.7	48.6	32.9	48.6	43.2	59.4	58.4	54.0
	63	9.3	11.4	26.5	23.1	35.3	37.3	31.9	49.1	52.5	61.3	45.6	60.3	54.0	59.8	81.4	74.6
	40	9.3	11.4	26.5	23.1	35.3	37.3	31.9	49.1	61.4	62.8	63.3	60.3	59.8	59.8	83.4	83.4
	<=25	9.3	11.4	26.5	23.1	35.3	37.3	31.9	49.1	61.4	62.8	67.7	60.3	59.8	59.8	83.4	83.4
Heavy duty bearing model	250								23.1	18.6	93.2	56.9	86.8	59.8	59.8	83.4	83.4
	160								25.0	21.1	94.2	56.9	87.8	59.8	59.8	83.4	83.4
	100								29.4	27.5	101.5	56.9	97.6	59.8	59.8	83.4	83.4
	63								39.2	36.3	124.1	56.9	119.2	59.8	59.8	83.4	83.4
	40								39.2	49.1	149.1	56.9	149.6	59.8	59.8	83.4	83.4
	<=25								39.2	56.9	181.0	56.9	187.9	59.8	59.8	83.4	83.4

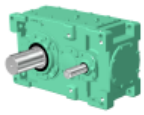

Triple Reduction RL,LR / Quadruple Reduction RR,LL

Size of Reducer								L.Speed Shaft Speed r/min	
9110	9115	9118	9121	9126	9128	9131	9136		
167.8	222.7							250	Standard bearing model
174.1	234.9							160	
184.9	245.7	391.9	352.7	330.6	315.4	403.2	391.9	100	
190.8	303.1	387.5	369.3	341.4	328.6	462.5	430.7	63	
194.7	320.8	460.1	449.3	401.2	409.6	572.4	511.1	40	
184.9	316.4	448.3	554.8	497.4	534.6	733.8	638.6	<=25	
250.6	316.9							250	Heavy duty bearing model
214.8	334.5							160	
195.2	340.9							100	
190.8	333.5							63	
194.7	320.8							40	
184.9	316.4							<=25	

Units : kN

Triple Redcution RR,LL / Quadruple Reduction RL,LR

Size of Reducer								L.Speed Shaft Speed r/min	
9110	9115	9118	9121	9126	9128	9131	9136		
94.2	152.5							250	Standard bearing model
92.2	155.0							160	
101.0	167.3	312.0	228.1	197.7	159.4	203.6	190.3	100	
144.7	220.7	292.3	244.3	206.0	170.7	260.9	218.8	63	
199.1	250.2	373.3	322.7	257.0	250.2	369.3	286.5	40	
272.7	353.2	460.1	427.2	348.7	373.3	528.3	398.3	<=25	
191.3	248.7							250	Heavy duty bearing model
197.7	261.4							160	
210.4	274.2							100	
267.8	341.9							63	
323.7	382.1							40	
323.7	374.7							<=25	

Units : kN

Size of Reducer								L.Speed Shaft Speed r/min	
9110	9115	9118	9121	9126	9128	9131	9136		
50.0	76.5							250	Standard bearing model
49.5	76.5							160	
54.0	83.4	119.7	121.6	116.7	91.2	113.3	107.9	100	
74.6	83.4	119.7	121.6	121.6	96.6	140.3	122.6	63	
83.4	83.4	119.7	121.6	121.6	134.9	191.3	155.5	40	
83.4	83.4	119.7	121.6	121.6	144.2	192.3	192.3	<=25	
83.4	83.4							250	Heavy duty bearing model
83.4	83.4							160	
83.4	83.4							100	
83.4	83.4							63	
83.4	83.4							40	
83.4	83.4							<=25	

Units : kN

Overhang Factor

Overhang Member	Overhang Factor
Sprocket (Single Row)	1
Sprocket (Double Row)	1.25
Gears	1.25
V belt	1.5
Flat Belt	2.5

Notes

1. The value shown in the table is allowable radial load when it is applied to the center of the solid shaft (except hollow shaft).
   Consult us when a load is not in the center.
2. Consult us for the blanks in the table.
3. Consult us when the radial load is applied upward.
4. In case of double projection shaft (RB, LB, BB)
   (1) See sheet (1) when the radial load is applied only to the shaft 1.
   (2) See sheet (2) when the radial load is applied only to the shaft 2.
   (3) Consult us when the radial load is applied to both shafts.

RB

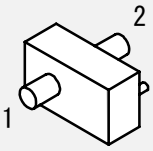

LB

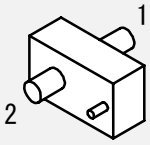

BB

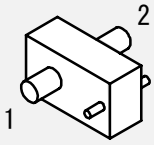

Allowable Radial Load

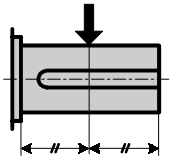

Sheet1

Aplicable to configurations : Double Redcution RR,LL/

	L.Speed Shaft Speed r/min	Size of Reducer															
		9015	9025	9030	9035	9045	9050	9055	9060	9070	9075	9080	9085	9090	9095	9100	9105
Standard bearing model	250	1300	2250	1800	3000	3950	3850	4750	4050	4500	11200	7800	11500	10200	14050	14250	19600
	160	1500	2450	2050	3200	4200	4050	4900	4250	4700	11250	8750	11550	11100	14850	16050	20450
	100	1650	2400	2550	3850	5000	4800	5450	4850	5550	12150	10100	12950	12450	15050	16950	18750
	63	1650	2350	3050	4300	5950	5700	6350	6000	6650	14950	12800	15900	12800	14650	16850	18150
	40	1650	2350	3600	4300	6800	6850	7650	7250	8050	18150	16500	20100	12750	14050	16800	17700
	<=25	1600	2350	4300	4200	8200	8050	9200	8850	10100	22300	21200	24150	12500	13800	16650	17050
Heavy duty bearing model	250								7250	7150	15850	12500	16200	14450	16200	18450	21800
	160								7950	7900	16200	14000	16550	13500	15450	17800	20450
	100								8300	9400	17500	15250	18200	12950	15050	17000	18750
	63								8300	11700	21050	15200	21900	12800	14650	16900	18150
	40								8300	12000	23600	15150	24150	12750	14050	16850	17700
	<=25								8300	12000	23600	15000	24150	12500	13800	16700	17050

Sheet2

Applicable to configurations : Double Reduction RL,LR/

	L.Speed Shaft Speed r/min	Size of Reducer															
		9015	9025	9030	9035	9045	9050	9055	9060	9070	9075	9080	9085	9090	9095	9100	9105
Standard bearing model	250	850	1550	1000	2200	2900	2300	3200	1700	1750	8850	4450	8200	5950	9950	8200	13400
	160	1000	1900	1250	2350	3000	2450	3200	1850	1800	8700	5350	8100	6550	10500	9800	14100
	100	1400	2400	1700	3000	3800	2900	3600	2250	2600	9400	6400	9400	7600	11300	10800	14950
	63	1700	2900	2200	3700	4800	3800	4350	3400	3450	11950	9100	12050	10650	15100	15650	20400
	40	2150	3600	2750	4450	5550	4950	5650	4600	4850	15200	12800	16200	14950	17550	20750	24000
	<=25	2500	3700	3500	5150	7000	6300	7150	6200	6900	17520	17450	21550	17450	17450	21950	31000
Heavy duty bearing model	250								4700	4100	13650	9150	13000	11700	15900	15350	21750
	160								5300	4650	13800	10550	13050	12750	16800	17400	22750
	100								6150	6050	14850	11800	14650	14350	17950	19100	24150
	63								8300	8150	17520	15550	18000	17750	19050	22300	30750
	40								8300	11100	17520	19550	22900	19550	19750	24650	31000
	<=25								8300	12000	17520	18400	23480	17450	17450	21900	31000

Allowable Axial Load

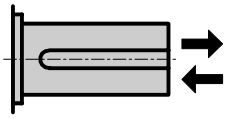

	L.Speed Shaft Speed r/min	Size of Reducer															
		9015	9025	9030	9035	9045	9050	9055	9060	9070	9075	9080	9085	9090	9095	9100	9105
Standard bearing model	250	950	1160	1500	2350	3600	3350	3250	2750	2850	4650	2400	4350	3200	5300	4600	5100
	160	950	1160	1850	2350	3600	3400	3250	2950	2900	4600	2800	4300	3500	5400	5400	5050
	100	950	1160	2500	2350	3600	3800	3250	3500	4050	4950	3350	4950	4400	6050	5950	5500
	63	950	1160	2700	2350	3600	3800	3250	5000	5350	6250	4650	6150	5500	6100	8300	7600
	40	950	1160	2700	2350	3600	3800	3250	5000	6260	6400	6450	6150	6100	6100	8500	8500
	<=25	950	1160	2700	2350	3600	3800	3250	5000	6260	6400	6900	6150	6100	6100	8500	8500
Heavy duty bearing model	250								2350	1900	9500	5800	8850	6100	6100	8500	8500
	160								2550	2150	9600	5800	8950	6100	6100	8500	8500
	100								3000	2800	10350	5800	9950	6100	6100	8500	8500
	63								4000	3700	12650	5800	12150	6100	6100	8500	8500
	40								4000	5000	15200	5800	15250	6100	6100	8500	8500
	<=25								4000	5800	18450	5800	19150	6100	6100	8500	8500

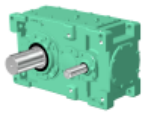

Triple Reduction RL,LR / Quadruple Reduction RR,LL

Size of Reducer								L.Speed Shaft Speed r/min	
9110	9115	9118	9121	9126	9128	9131	9136		
17100	22700							250	Standard bearing model
17750	23950							160	
18850	25050	39950	35950	33700	32150	41100	39950	100	
19450	30900	39500	37650	34800	33500	47150	43900	63	
19850	32700	46900	45800	40900	41750	58350	52100	40	
18850	32250	45700	56550	50700	54500	74800	65100	<=25	
25550	32300							250	Heavy duty bearing model
21900	34100							160	
19900	34750							100	
19450	34000							63	
19850	32700							40	
18850	32250							<=25	

Units : kgf

Triple Reduction RR,LL / Quadruple Reduction RL,LR

Size of Reducer								L.Speed Shaft Speed r/min	
9110	9115	9118	9121	9126	9128	9131	9136		
9600	15550							250	Standard bearing model
9400	15800							160	
10300	17050	31800	23250	20150	16250	20750	19400	100	
14750	22500	29800	24900	21000	17400	26600	22300	63	
20300	25500	38050	32900	26200	25500	37650	29200	40	
27800	36000	46900	43550	35550	38050	53850	40600	<=25	
19500	25350							250	Heavy duty bearing model
20150	26650							160	
21450	27950							100	
27300	34850							63	
33000	38950							40	
33000	38200							<=25	

Units : kgf

Size of Reducer								L.Speed Shaft Speed r/min	
9110	9115	9118	9121	9126	9128	9131	9136		
5100	7800							250	Standard bearing model
5050	7800							160	
5500	8500	12200	12400	11900	9300	11550	11000	100	
7600	8500	12200	12400	12400	9850	14300	12500	63	
8500	8500	12200	12400	12400	13750	19500	15850	40	
8500	8500	12200	12400	12400	14700	19600	19600	<=25	
8500	8500							250	Heavy duty bearing model
8500	8500							160	
8500	8500							100	
8500	8500							63	
8500	8500							40	
8500	8500							<=25	

Units : kgf

Overhang Factor

Overhang Member	Overhang Factor
Sprocket (Single Row)	1
Sprocket (Double Row)	1.25
Gears	1.25
V belt	1.5
Flat Belt	2.5

Notes

1. The value shown in the table is allowable radial load when it is applied to the center of the solid shaft (except hollow shaft).
   Consult us when a load is not in the center.
2. Consult us for the blanks in the table.
3. Consult us when the radial load is applied upward.
4. In case of double projection shaft (RB, LB, BB)
   (1) See sheet (1) when the radial load is applied only to the shaft 1.
   (2) See sheet (2) when the radial load is applied only to the shaft 2.
   (3) Consult us when the radial load is applied to both shafts.

RB

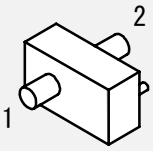

LB

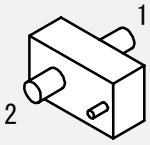

BB

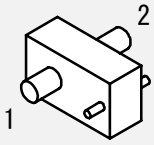

Double Reduction

Nominal Reduction Ratio	H.Speed Shaft Speed r/min	Size of Reducer															
		9015	9025	9030	9035	9045	9050	9055	9060	9070	9075	9080	9085	9090	9095	9100	9105
6.3 ▼ 8	1800	2.5	3.4	1.5	1.5	—	—	—	—	2.5	2.5	2.5	2.5	26.5	26.5	29.4	29.4
	1500	2.5	3.4	3.9	3.9	—	—	—	—	2.5	2.5	3.9	3.9	28.0	28.0	31.4	31.4
	1200	2.5	2.9	3.4	3.4	—	—	—	—	3.9	3.9	8.8	8.8	30.4	30.4	35.8	33.4
	1000	2.5	2.9	3.4	3.4	—	—	—	—	3.9	3.9	20.6	20.6	33.4	33.8	41.2	36.8
	900	2.5	2.9	3.4	3.4	—	—	—	—	3.9	3.9	24.0	24.0	35.8	34.8	44.6	38.7
	750	2.5	2.9	3.4	3.4	—	—	—	—	4.4	4.4	26.0	26.0	38.3	35.8	47.6	42.2
9 ▼ 10	1800	2.9	3.4	3.9	3.9	—	—	—	—	2.0	2.0	12.8	12.8	28.9	28.4	33.8	31.4
	1500	2.9	3.4	3.9	3.9	3.4	—	—	5.4	5.9	5.9	24.0	24.0	31.9	30.4	38.7	33.4
	1200	2.9	3.4	3.9	3.9	6.9	2.5	2.5	11.8	16.2	16.2	29.4	29.4	36.8	34.3	45.1	37.3
	1000	2.9	3.4	3.9	3.9	8.3	5.9	5.9	12.8	23.1	23.1	29.4	29.4	41.7	37.8	50.5	41.7
	900	2.9	3.4	3.9	3.9	8.3	7.4	7.4	12.8	24.5	24.5	28.9	28.9	43.7	39.2	54.0	45.1
	750	2.9	3.4	3.9	3.9	8.3	10.3	10.3	12.8	24.5	24.5	28.9	28.9	46.1	40.2	57.4	48.6
11.2 ▼ 22.4	1800	2.9	3.9	4.4	4.4	8.3	8.8	8.8	8.8	10.8	10.8	25.0	25.0	32.9	29.4	40.2	32.4
	1500	2.9	3.9	4.4	4.4	8.8	11.8	11.8	13.2	19.1	19.1	25.0	25.0	37.3	31.9	45.1	35.3
	1200	2.9	3.9	4.4	4.4	8.8	11.8	11.8	13.2	25.0	25.0	25.0	25.0	42.2	35.8	51.5	40.2
	1000	2.9	3.9	4.4	4.4	8.8	11.8	11.8	13.2	25.0	25.0	25.0	25.0	47.1	39.2	56.9	45.6
	900	2.9	3.9	4.4	4.4	8.8	11.8	11.8	13.2	25.0	25.0	25.0	25.0	49.1	40.7	60.3	49.1
	750	2.9	3.9	4.4	4.4	8.8	11.8	11.8	13.2	25.0	25.0	25.0	25.0	51.5	42.7	63.8	52.5

Triple Reduction

Nominal Reduction Ratio	H.Speed Shaft Speed r/min	Size of Reducer															
		9015	9025	9030	9035	9045	9050	9055	9060	9070	9075	9080	9085	9090	9095	9100	9105
20 ▼ 25	1800	2.0	2.9	2.0	2.0	2.9	3.4	3.4	3.4	2.9	2.9	6.4	6.4	15.2	15.2	17.2	16.7
	1500	2.0	2.9	2.0	2.0	2.9	3.4	3.4	3.9	2.9	2.9	7.8	7.8	15.2	15.2	17.2	16.7
	1200	2.0	2.9	2.0	2.0	2.9	3.4	3.4	4.9	5.4	5.4	9.8	9.8	14.7	14.7	17.2	16.2
	1000	2.0	2.9	2.0	2.0	2.9	3.4	3.4	5.4	5.9	5.9	10.8	10.8	14.7	14.7	17.2	16.2
	900	2.0	2.9	2.0	2.0	2.9	3.4	3.4	5.9	6.4	6.4	10.8	10.8	14.7	14.2	17.2	16.2
	750	2.0	2.9	2.0	2.0	2.9	3.4	3.4	6.4	7.4	7.4	10.8	10.8	14.7	14.2	17.2	16.2
28 ▼ 50	1800	2.0	2.9	2.5	2.5	2.9	3.9	3.9	5.4	5.9	5.9	9.8	9.8	16.7	16.2	19.6	18.6
	1500	2.0	2.9	2.5	2.5	2.9	3.9	3.9	5.9	6.9	6.9	11.8	11.8	16.7	16.2	19.6	18.6
	1200	2.0	2.9	2.5	2.5	2.9	3.9	3.9	6.9	7.8	7.8	12.3	12.3	16.7	16.2	19.6	18.6
	1000	2.0	2.9	2.5	2.5	2.9	3.9	3.9	7.4	8.8	8.8	12.3	12.3	16.7	15.7	19.6	18.1
	900	2.0	2.9	2.5	2.5	2.9	3.9	3.9	7.8	9.3	9.3	12.3	12.3	16.7	15.7	19.6	18.1
	750	2.0	2.9	2.5	2.5	2.9	3.9	3.9	7.8	9.8	9.8	12.3	12.3	16.7	15.7	19.6	18.1
56 ▼ 90	1800			2.9	2.9	3.9	4.4	4.4	8.8	9.8	9.8	14.2	14.2	17.7	17.2	21.6	20.6
	1500			2.9	2.9	3.9	4.4	4.4	9.3	10.8	10.8	16.2	16.2	17.7	17.2	21.6	20.6
	1200			2.9	2.9	3.9	4.4	4.4	9.3	11.3	11.3	16.2	16.2	17.7	17.2	21.6	20.6
	1000			2.9	2.9	3.9	4.4	4.4	9.3	11.3	11.3	16.2	16.2	17.7	17.2	21.6	20.6
	900			2.9	2.9	3.9	4.4	4.4	9.3	11.3	11.3	16.2	16.2	17.7	17.2	21.6	20.6
	750			2.9	2.9	3.9	4.4	4.4	9.3	11.3	11.3	16.2	16.2	17.7	17.2	21.6	20.6

Quadruple Reduction

Nominal Reduction Ratio	H.Speed Shaft Speed r/min	Size of Reducer															
		9015	9025	9030	9035	9045	9050	9055	9060	9070	9075	9080	9085	9090	9095	9100	9105
80 ▼ 500	1800			2.0	2.0	2.9	2.5	2.5	3.4	3.9	3.9	4.9	4.9	15.2	15.2	21.1	21.1
	1500			2.0	2.0	2.9	2.5	2.5	3.4	3.9	3.9	4.9	4.9	15.2	15.2	21.1	21.1
	1200			2.0	2.0	2.9	2.5	2.5	3.4	3.9	3.9	4.9	4.9	15.2	15.2	21.1	21.1
	1000			2.0	2.0	2.9	2.5	2.5	3.4	3.9	3.9	4.9	4.9	15.2	15.2	21.1	21.1
	900			2.0	2.0	2.9	2.5	2.5	3.4	3.9	3.9	4.9	4.9	15.2	15.2	21.1	21.1
	750			2.0	2.0	2.9	2.5	2.5	3.4	3.9	3.9	4.9	4.9	15.2	15.2	21.1	21.1

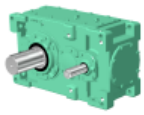

Size of Reducer								H.Speed Shaft Speed r/min	Nominal Reduction Ratio
9110	9115	9118	9121	9126	9128	9131	9136		
43.7	43.2							1800	6.3 ▼ 8
46.1	45.6							1500	
49.1	49.1							1200	
53.0	53.0							1000	
55.9	55.9							900	
59.4	59.4							750	
48.1	47.1							1800	9 ▼ 10
52.5	50.0							1500	
58.4	55.4							1200	
63.8	60.3							1000	
66.7	63.8							900	
71.6	67.2							750	
54.4	48.1							1800	11.2 ▼ 22.4
59.4	52.0							1500	
65.7	58.4							1200	
71.1	63.3							1000	
74.6	66.7							900	
80.4	70.1							750	

Units : kN

Size of Reducer								H.Speed Shaft Speed r/min	Nominal Reduction Ratio
9110	9115	9118	9121	9126	9128	9131	9136		
12.3	12.3	4.9	—	—	—	16.2	13.7	1800	20 ▼ 25
11.8	11.8	4.9	—	—	—	24.5	18.6	1500	
10.8	10.8	5.4	—	—	—	34.8	24.5	1200	
10.3	10.3	5.4	—	—	—	44.1	29.9	1000	
10.3	9.8	7.8	—	—	—	50.0	33.4	900	
9.8	9.8	10.3	—	—	—	59.4	38.7	750	
12.8	14.7	4.9	10.3	4.4	—	29.9	23.5	1800	28 ▼ 50
12.3	14.2	8.8	15.2	6.4	3.9	38.3	28.4	1500	
12.3	13.7	17.2	22.1	10.3	11.3	49.1	34.8	1200	
12.3	13.2	17.7	28.0	13.7	17.7	58.4	40.7	1000	
12.3	13.2	17.7	31.4	16.7	21.1	64.3	44.1	900	
12.3	12.8	17.7	34.8	20.6	25.5	73.6	50.5	750	
17.2	11.8	26.5	28.9	17.7	21.6	52.0	26.0	1800	56 ▼ 90
17.2	10.8	26.5	33.8	22.6	27.5	51.5	25.5	1500	
17.2	10.8	26.5	38.3	25.0	34.8	51.0	25.0	1200	
17.2	10.8	26.5	37.8	25.0	41.2	50.5	24.0	1000	
17.2	10.8	26.5	37.8	25.0	45.1	50.5	24.0	900	
16.7	10.3	26.5	37.8	24.5	49.5	50.0	23.5	750	

Units :kN

Size of Reducer								H.Speed Shaft Speed r/min	Nominal Reduction Ratio
9110	9115	9118	9121	9126	9128	9131	9136		
21.1	21.1	17.7	24.5	23.1	34.3	34.3	26.5	1800	80 ▼ 500
21.1	21.1	24.5	24.5	22.6	34.3	39.2	26.0	1500	
21.1	21.1	27.5	24.5	22.6	34.3	39.2	26.0	1200	
21.1	21.1	28.9	24.5	22.6	35.8	39.2	26.0	1000	
21.1	21.1	29.9	24.5	22.6	34.3	39.2	25.5	900	
21.1	21.1	30.4	24.5	22.6	34.3	39.2	25.5	750	

Units : kN

Overhang Factor

Overhang Member	Overhang Factor
Sprocket (Single Row)	1
Sprocket (Double Row)	1.25
Gears	1.25
V belt	1.5
Flat Belt	2.5

Notes

1. The value shown in the table is allowable radial load when it is applied to the center of the shaft.
2. Consult us when the radial load due to pulley driving, etc. is to be applied in the blanks in the table.

Double Reduction

Nominal Reduction Ratio	H.Speed Shaft Speed r/min	Size of Reducer															
		9015	9025	9030	9035	9045	9050	9055	9060	9070	9075	9080	9085	9090	9095	9100	9105
6.3 ▼ 8	1800	250	350	150	150	—	—	—	—	250	250	250	250	2700	2700	3000	3000
	1500	250	350	400	400	—	—	—	—	250	250	400	400	2850	2850	3200	3200
	1200	250	300	350	350	—	—	—	—	400	400	900	900	3100	3100	3650	3400
	1000	250	300	350	350	—	—	—	—	400	400	2100	2100	3400	3450	4200	3750
	900	250	300	350	350	—	—	—	—	400	400	2450	2450	3650	3550	4550	3950
	750	250	300	350	350	—	—	—	—	450	450	2650	2650	3900	3650	4850	4300
9 ▼ 10	1800	300	350	400	400	—	—	—	—	200	200	1300	1300	2950	2900	3450	3200
	1500	300	350	400	400	350	—	—	550	600	600	2450	2450	3250	3100	3950	3400
	1200	300	350	400	400	700	250	250	1200	1650	1650	3000	3000	3750	3500	4600	3800
	1000	300	350	400	400	850	600	600	1300	2350	2350	3000	3000	4250	3850	5150	4250
	900	300	350	400	400	850	750	750	1300	2500	2500	2950	2950	4450	4000	5500	4600
	750	300	350	400	400	850	1050	1050	1300	2500	2500	2950	2950	4700	4100	5850	4950
11.2 ▼ 22.4	1800	300	400	450	450	850	900	900	900	1100	1100	2550	2550	3350	3000	4100	3300
	1500	300	400	450	450	900	1200	1200	1350	1950	1950	2550	2550	3800	3250	4600	3600
	1200	300	400	450	450	900	1200	1200	1350	2550	2550	2550	2550	4300	3650	5250	4100
	1000	300	400	450	450	900	1200	1200	1350	2550	2550	2550	2550	4800	4000	5800	4650
	900	300	400	450	450	900	1200	1200	1350	2550	2550	2550	2550	5000	4150	6150	5000
	750	300	400	450	450	900	1200	1200	1350	2550	2550	2550	2550	5250	4350	6500	5350

Triple Reduction

Nominal Reduction Ratio	H.Speed Shaft Speed r/min	Size of Reducer															
		9015	9025	9030	9035	9045	9050	9055	9060	9070	9075	9080	9085	9090	9095	9100	9105
20 ▼ 25	1800	200	300	200	200	300	350	350	350	300	300	650	650	1550	1550	1750	1700
	1500	200	300	200	200	300	350	350	400	300	300	800	800	1550	1550	1750	1700
	1200	200	300	200	200	300	350	350	500	550	550	1000	1000	1500	1500	1750	1650
	1000	200	300	200	200	300	350	350	550	600	600	1100	1100	1500	1500	1750	1650
	900	200	300	200	200	300	350	350	600	650	650	1100	1100	1500	1450	1750	1650
	750	200	300	200	200	300	350	350	650	750	750	1100	1100	1500	1450	1750	1650
28 ▼ 50	1800	200	300	250	250	300	400	400	550	600	600	1000	1000	1700	1650	2000	1900
	1500	200	300	250	250	300	400	400	600	700	700	1200	1200	1700	1650	2000	1900
	1200	200	300	250	250	300	400	400	700	800	800	1250	1250	1700	1650	2000	1900
	1000	200	300	250	250	300	400	400	750	900	900	1250	1250	1700	1600	2000	1850
	900	200	300	250	250	300	400	400	800	950	950	1250	1250	1700	1600	2000	1850
	750	200	300	250	250	300	400	400	800	1000	1000	1250	1250	1700	1600	2000	1850
56 ▼ 90	1800			300	300	400	450	450	900	1000	1000	1450	1450	1800	1750	2200	2100
	1500			300	300	400	450	450	950	1100	1100	1650	1650	1800	1750	2200	2100
	1200			300	300	400	450	450	950	1150	1150	1650	1650	1800	1750	2200	2100
	1000			300	300	400	450	450	950	1150	1150	1650	1650	1800	1750	2200	2100
	900			300	300	400	450	450	950	1150	1150	1650	1650	1800	1750	2200	2100
	750			300	300	400	450	450	950	1150	1150	1650	1650	1800	1750	2200	2100

Quadruple Reduction

Nominal Reduction Ratio	H.Speed Shaft Speed r/min	Size of Reducer															
		9015	9025	9030	9035	9045	9050	9055	9060	9070	9075	9080	9085	9090	9095	9100	9105
80 ▼ 500	1800			200	200	300	250	250	350	400	400	500	500	1550	1550	2150	2150
	1500			200	200	300	250	250	350	400	400	500	500	1550	1550	2150	2150
	1200			200	200	300	250	250	350	400	400	500	500	1550	1550	2150	2150
	1000			200	200	300	250	250	350	400	400	500	500	1550	1550	2150	2150
	900			200	200	300	250	250	350	400	400	500	500	1550	1550	2150	2150
	750			200	200	300	250	250	350	400	400	500	500	1550	1550	2150	2150

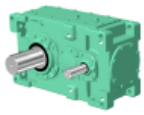

Size of Reducer								H.Speed Shaft Speed r/min	Nominal Reduction Ratio
9110	9115	9118	9121	9126	9128	9131	9136		
4450	4400							1800	6.3 ▼ 8
4700	4650							1500	
5000	5000							1200	
5400	5400							1000	
5700	5700							900	
6050	6050							750	
4900	4800							1800	9 ▼ 10
5350	5100							1500	
5950	5650							1200	
6500	6150							1000	
6800	6500							900	
7300	6850							750	
5550	4900							1800	11.2 ▼ 22.4
6050	5300							1500	
6700	5950							1200	
7250	6450							1000	
7600	6800							900	
8200	7150							750	

Units : kgf

Size of Reducer								H.Speed Shaft Speed r/min	Nominal Reduction Ratio
9110	9115	9118	9121	9126	9128	9131	9136		
1250	1250	500	—	—	—	1650	1400	1800	20 ▼ 25
1200	1200	500	—	—	—	2500	1900	1500	
1100	1100	550	—	—	—	3550	2500	1200	
1050	1050	550	—	—	—	4500	3050	1000	
1050	1000	800	—	—	—	5100	3400	900	
1000	1000	1050	—	—	—	6050	3950	750	
1300	1500	500	1050	450	—	3050	2400	1800	28 ▼ 50
1250	1450	900	1550	650	400	3900	2900	1500	
1250	1400	1750	2250	1050	1150	5000	3550	1200	
1250	1350	1800	2850	1400	1800	5950	4150	1000	
1250	1350	1800	3200	1700	2150	6550	4500	900	
1250	1300	1800	3550	2100	2600	7500	5150	750	
1750	1200	2700	2950	1800	2200	5300	2650	1800	56 ▼ 90
1750	1100	2700	3450	2300	2800	5250	2600	1500	
1750	1100	2700	3900	2550	3550	5200	2550	1200	
1750	1100	2700	3850	2550	4200	5150	2450	1000	
1750	1100	2700	3850	2550	4600	5150	2450	900	
1700	1050	2700	3850	2500	5050	5100	2400	750	

Units : kgf

Size of Reducer								H.Speed Shaft Speed r/min	Nominal Reduction Ratio
9110	9115	9118	9121	9126	9128	9131	9136		
2150	2150	1800	2500	2350	3500	3500	2700	1800	80 ▼ 500
2150	2150	2500	2500	2300	3500	4000	2650	1500	
2150	2150	2800	2500	2300	3500	4000	2650	1200	
2150	2150	2950	2500	2300	3650	4000	2650	1000	
2150	2150	3050	2500	2300	3500	4000	2600	900	
2150	2150	3100	2500	2300	3500	4000	2600	750	

Units : kgf

Overhang Factor

Overhang Member	Overhang Factor
Sprocket (Single Row)	1
Sprocket (Double Row)	1.25
Gears	1.25
V belt	1.5
Flat Belt	2.5

Notes

1. The value shown in the table is allowable radial load when it is applied to the center of the shaft.
2. Consult us when the radial load due to pulley driving, etc. is to be applied in the blanks in the table.

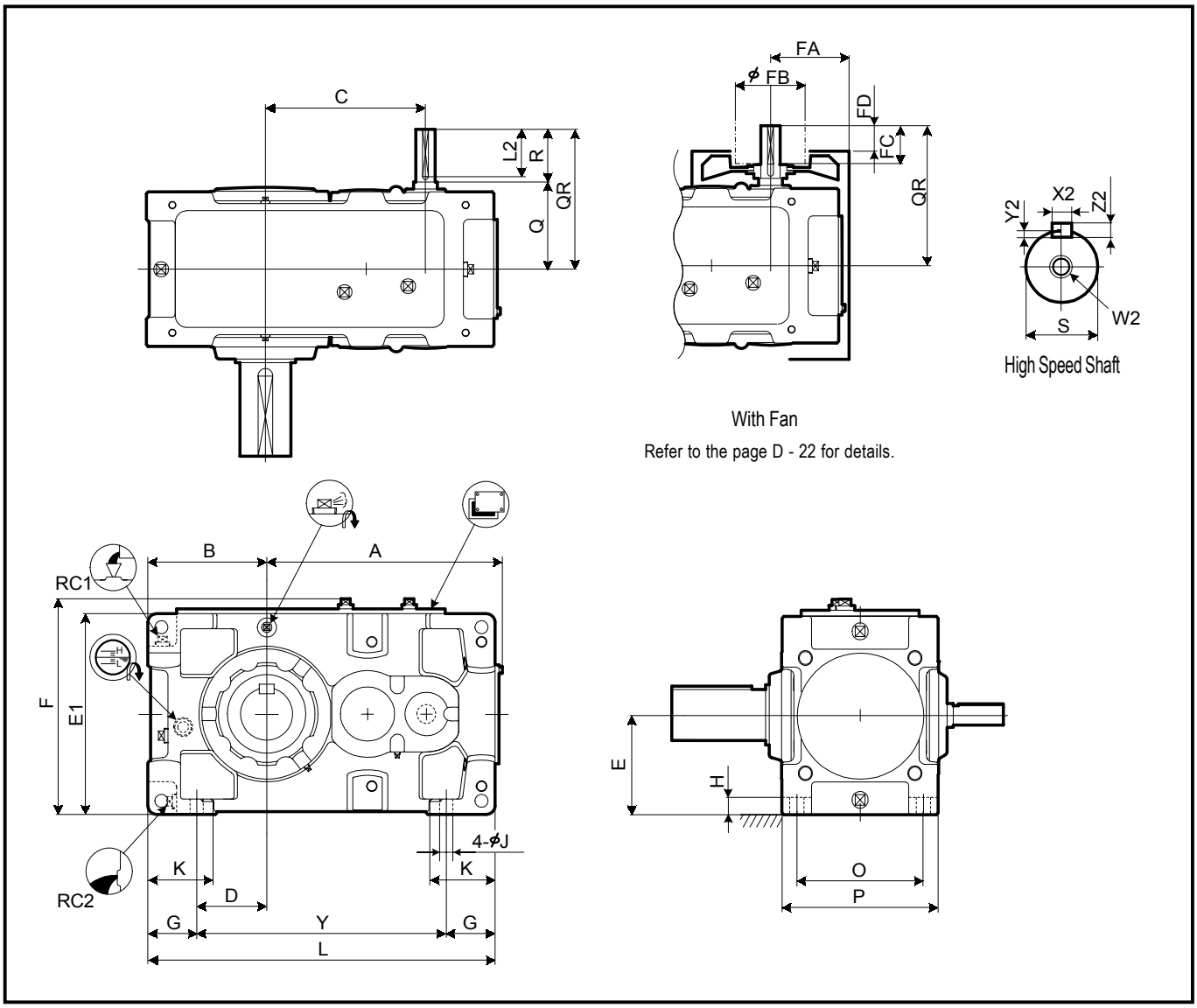

Size	A	B	C	D	E	E1	F	G	H	J	K	L	O	P	Y
9015	295	160	194	90	135	270	299	70	22	15	95	440	170	205	300
9025	346	175	227	95	155	310	339	80	25	19	110	505	195	235	345
9030	406	200	264	110	160	320	349	90	28	24	120	590	215	265	410
9035	437	219	295	129	185	370	399	90	28	24	120	640	215	265	460
9040	467	235	306	120	200	400	431	115	30	28	150	685	255	315	455
9050	537	255	358	138.5	210	420	451	116.5	32	28	150	775	285	345	542
9055	576	286	397	171	245	490	521	115	32	28	150	845	285	345	615

Size	High Speed Shaft									Fan				RC1	RC2	Wt.	Oil Qty.
	Q	QR	R	S	W2/Depth	Key				FA	FB	FC	FD			kg	L
						X2	Y2	Z2	L2								
9015	131	211	80	30k6	M10/22	8	4	7	70	129	125	50	30	3/4"	3/4"	100	5
9025	146	225	80	35k6	M12/28	10	5	8	70	143	140	50	30	3/4"	3/4"	140	7
9030	159	269	110	40k6	M16/36	12	5	8	95	169	140	80	52	3/4"	3/4"	195	10
9035	159	269	110	40k6	M16/36	12	5	8	95	169	140	80	52	3/4"	3/4"	215	12
9040	174	284	110	50k6	M16/36	14	5.5	9	95	188	160	80	52	1"	1"	285	16
9050	193	303	110	55m6	M20/42	16	6	10	95	208	160	80	52	1"	1"	415	21
9055	193	303	110	55m6	M20/42	16	6	10	95	208	160	80	52	1"	1"	475	28

Units:mm

1.Key and keyways are based on ISO R773-1969 Close keys(JIS B1301-1996 Parallel key in fastening type)
2.The oil quantity is approximate.Oil shall be supplied within the range shown on the oil gauge.
3. Refer to the page D - 12 for dimensions not shown in these drawings.
4. Refer to the page D - 24 for the dimension of optional parts.

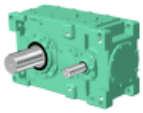

Slow Speed Shaft

Solid Shaft	Hollow Shaft (Shrink Disk Type)	Hollow Shaft (KeyType)
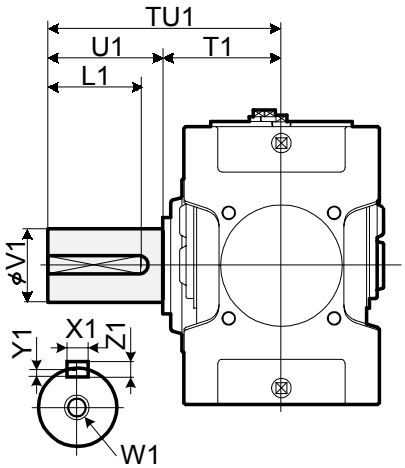	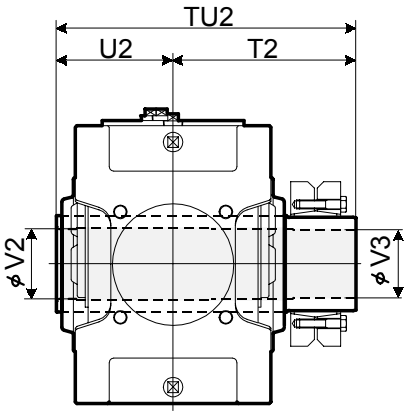	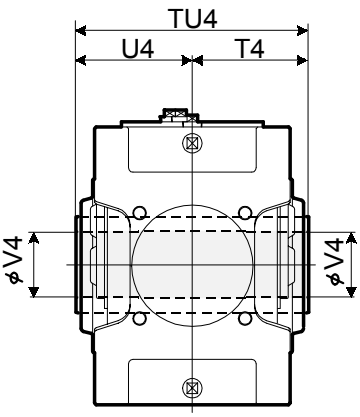
	Refer to the page D-18 for details.	Refer to the page D -19 for details.

Size	Solid Shaft									Hollow Shaft (Shrink Disk Type)					Hollow Shaft (Key Type)			
	TU1	T1	U1	V1	W1/Depth	Key				TU2	T2	U2	V2	V3	TU4	T4	U4	V4
						X1	Y1	Z1	L1									
9015	245	135	110	58m6	M20/42	18	7	11	95	328	193	135	63	60	270	135	135	55
9025	285	145	140	70m6	M20/42	20	7.5	12	125	358	213	145	73	70	300	150	150	65
9030	330	160	170	80m6	M20/42	22	9	14	150	393	233	160	83	80	330	165	165	75
9035	330	160	170	90m6	M20/42	25	9	14	150	403	243	160	88	85	330	165	165	85
9040	349	179	170	95m6	M24/50	25	9	14	150	448	268	180	98	95	360	180	180	90
9050	411	201	210	110m6	M24/50	28	10	16	190	503	303	200	108	105	410	205	205	105
9055	411	201	210	120m6	M24/50	32	11	18	185	528	323	205	123	120	410	205	205	115

Units:mm

Standard Shaft Arrangement Configuration

RL	RR	RB	LR	LL	LB	BL	BR	BB
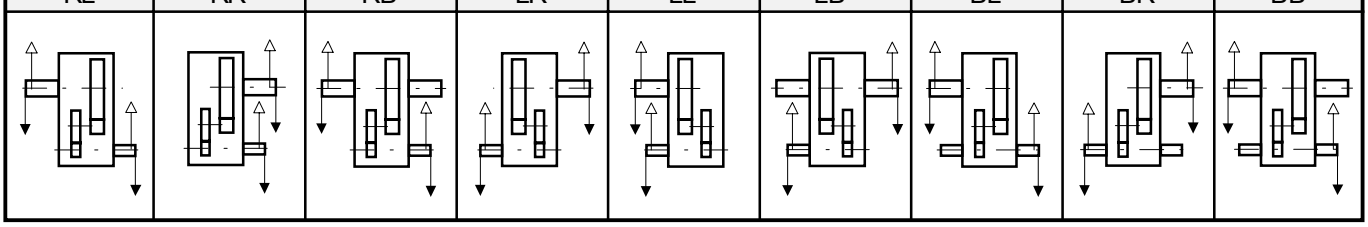								

Nomenclature

P H A [Size] P 2 - [Shaft Arrangement] [Low Speed Shaft Type] [Fan] - [Nominal Reduction Ratio]

Size: 9015, 9025, 9030, 9035, 9040, 9050, 9055

Shaft Arrangement: RL, RR, RB, LR, LL, LB, BL, BR, BB

Fan:
- (blank) : Without Fan
- F : With Fan

Low Speed Shaft Type:
- (blank) : Solid Shaft
- T : Hollow shaft (Shrink Disk type)
- K : Hollow shaft (Key type)

Size	Nominal Reduction Ratio											
	6.3	7.1	8	9	10	11.2	12.5	14	16	18	20	22.4
9015	O	O	O	O	O	O	O	O	O	O		
9025	O	O	O	O	O	O	O	O	O	O		
9030	O	O	O	O	O	O	O	O	O	O		
9035			O	O	O	O	O	O	O	O	O	O
9040	O	O	O	O	O	O	O	O	O	O		
9050	O	O	O	O	O	O	O	O	O	O		
9055			O	O	O	O	O	O	O	O	O	O

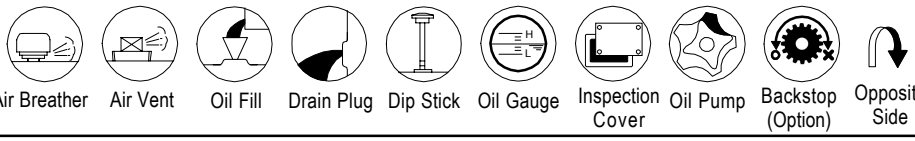

Air Breather | Air Vent | Oil Fill | Drain Plug | Dip Stick | Oil Gauge | Inspection Cover | Oil Pump | Backstop (Option) | Opposite Side

Sumitomo Heavy Industries, Ltd.
http://www.shi.co.jp/ptc

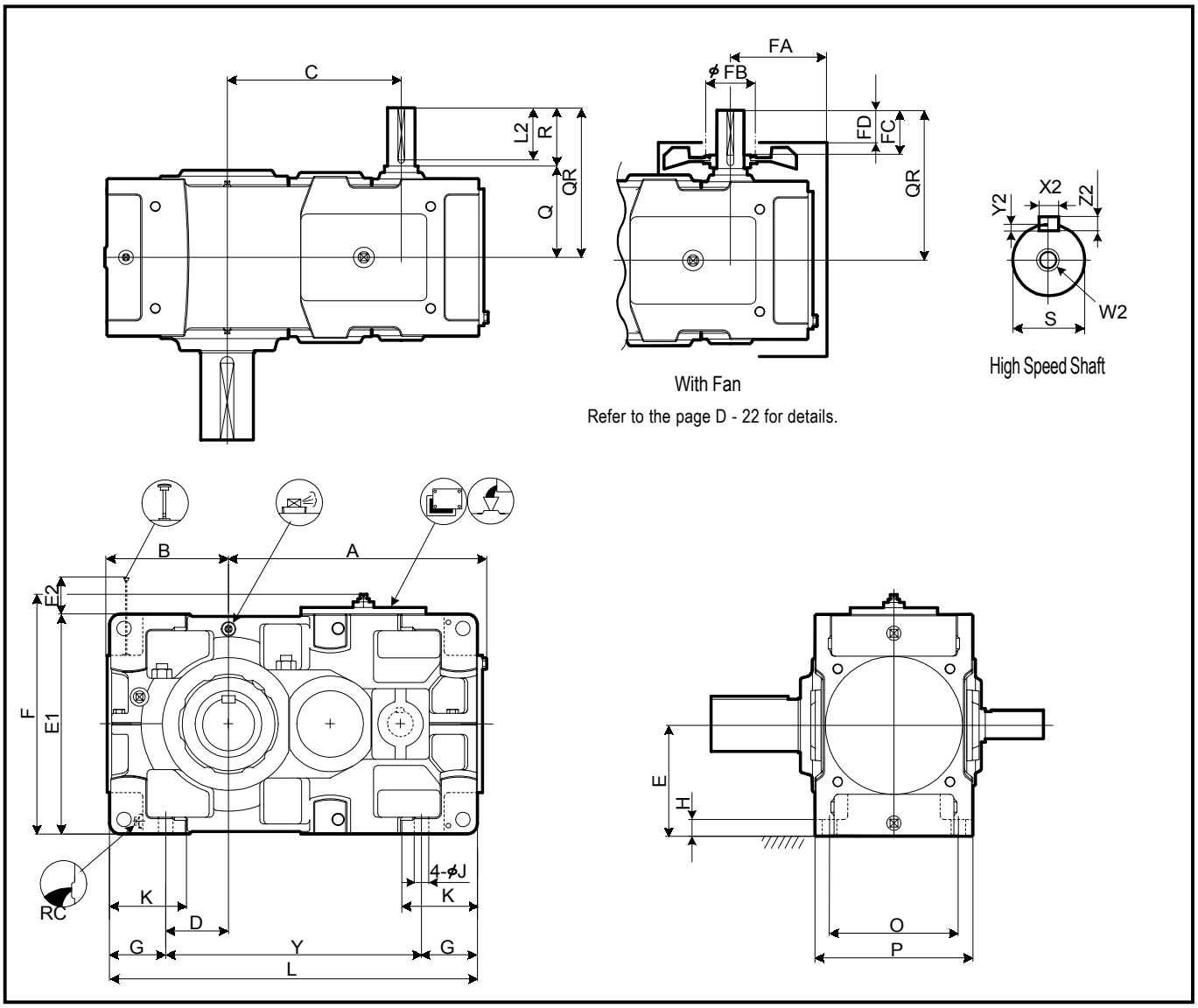

Size	A	B	C	D	E	E1	E2	F	G	H	J	K	L	O	P	Y
9060	621	291	414	151	265	530	183	578	135	35	35	180	885	310	380	615
9070	719	328	482	163	300	600	213	648	160	40	42	215	1020	350	430	700
9075	772	375	535	210	335	670	178	718	160	52	42	220	1120	350	430	800
9080	812	370	556	205	335	670	233	718	160	52	42	220	1155	380	460	835
9085	868	414	612	249	375	750	193	798	160	52	42	220	1255	380	460	935

Size	High Speed Shaft									Fan				RC	Wt. kg	Oil Qty. L
	Q	QR	R	S	W2/Depth	Key				FA	FB	FC	FD			
						X2	Y2	Z2	L2							
9060	220	360	140	65m6	M20/42	18	7	11	125	240	200	105	65	1"	610	25
9070	245	385	140	75m6	M20/42	20	7.5	12	125	274	225	105	65	1"	860	38
9075	245	385	140	75m6	M20/42	20	7.5	12	125	274	225	105	65	1"	1110	47
9080	264	434	170	85m6	M20/42	22	9	14	150	296	225	135	95	1"	1240	54
9085	264	434	170	85m6	M20/42	22	9	14	150	296	225	135	95	1"	1500	68

Units:mm

1.Key and keyways are based on ISO R773-1969 Close keys(JIS B1301-1996 Parallel key in fastening type)
2.The oil quantity is approximate.Oil shall be supplied within the range shown on the oil gauge.
3. Refer to the page D - 14 for dimensions not shown in these drawings.
4. Refer to the page D - 27 for the dimension of optional parts.

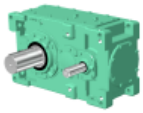

Slow Speed Shaft

Solid Shaft	Hollow Shaft (Shrink Disk Type)	Hollow Shaft (KeyType)
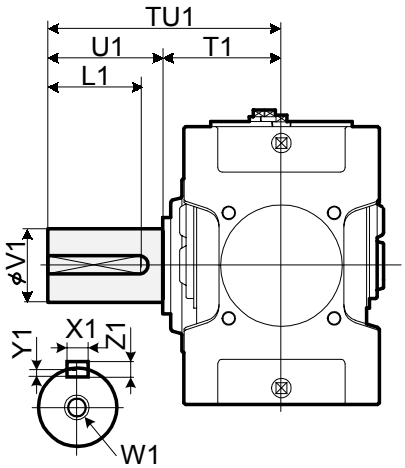	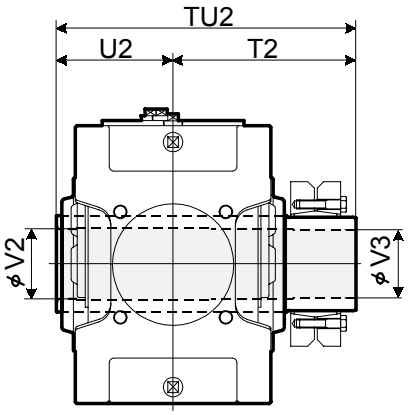 Refer to the page D-18 for details.	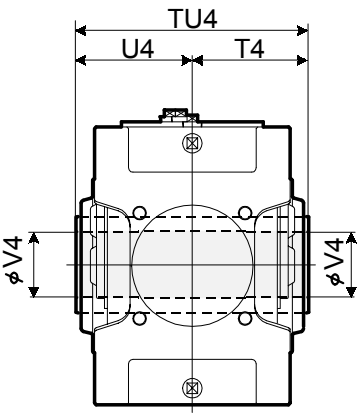 Refer to the page D -19 for details.

Size	Solid Shaft									Hollow Shaft (Shrink Disk Type)					Hollow Shaft (Key Type)			
	TU1	T1	U1	V1	W1/Depth	Key				TU2	T2	U2	V2	V3	TU4	T4	U4	V4
						X1	Y1	Z1	L1									
9060	440	230	210	125m6	M24/50	32	11	18	185	583	353	230	128	125	470	235	235	125
9070	509	259	250	145m6	M30/60	36	12	20	225	644	384	260	148	145	530	265	265	145
9075	562	262	300	160m6	M30/60	40	13	22	275	651	386	265	158	155	530	265	265	150
9080	582	282	300	165m6	M30/60	40	13	22	275	714	429	285	173	170	570	285	285	165
9085	585	285	300	175m6	M30/60	45	15	25	270	714	429	285	183	180	570	285	285	175

Units:mm

Standard Shaft Arrangement Configuration

RL	RR	RB	LR	LL	LB	BL	BR	BB
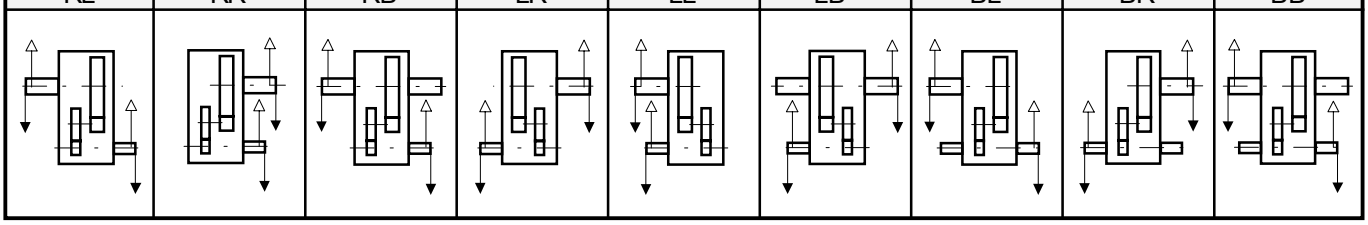								

Nomenclature

P H D [Size] P 2 - [Shaft Arrangement] [Low Speed Shaft Type] [Fan] - [Nominal Reduction Ratio]

Size: 9060, 9070, 9075, 9080, 9085

Shaft Arrangement: RL, RR, RB, LR, LL, LB, BL, BR, BB

Low Speed Shaft Type:
- (blank) : Solid Shaft
- T : Hollow shaft (Shrink Disk type)
- K : Hollow shaft (Key type)

Fan:
- (blank) : Without Fan
- F : With Fan

Size	Nominal Reduction Ratio											
	6.3	7.1	8	9	10	11.2	12.5	14	16	18	20	22.4
9060	O	O	O	O	O	O	O	O	O	O		
9070	O	O	O	O	O	O	O	O	O	O		
9075			O	O	O	O	O	O	O	O	O	O
9080	O	O	O	O	O	O	O	O	O	O		
9085			O	O	O	O	O	O	O	O	O	O

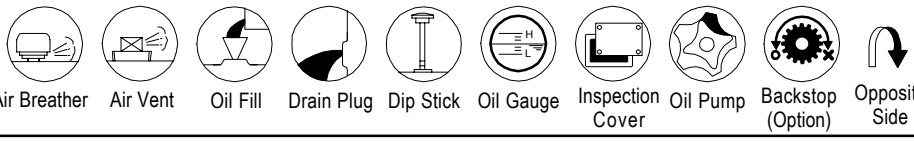

Air Breather | Air Vent | Oil Fill | Drain Plug | Dip Stick | Oil Gauge | Inspection Cover | Oil Pump | Backstop (Option) | Opposite Side

Sumitomo Heavy Industries, Ltd.
http://www.shi.co.jp/ptc

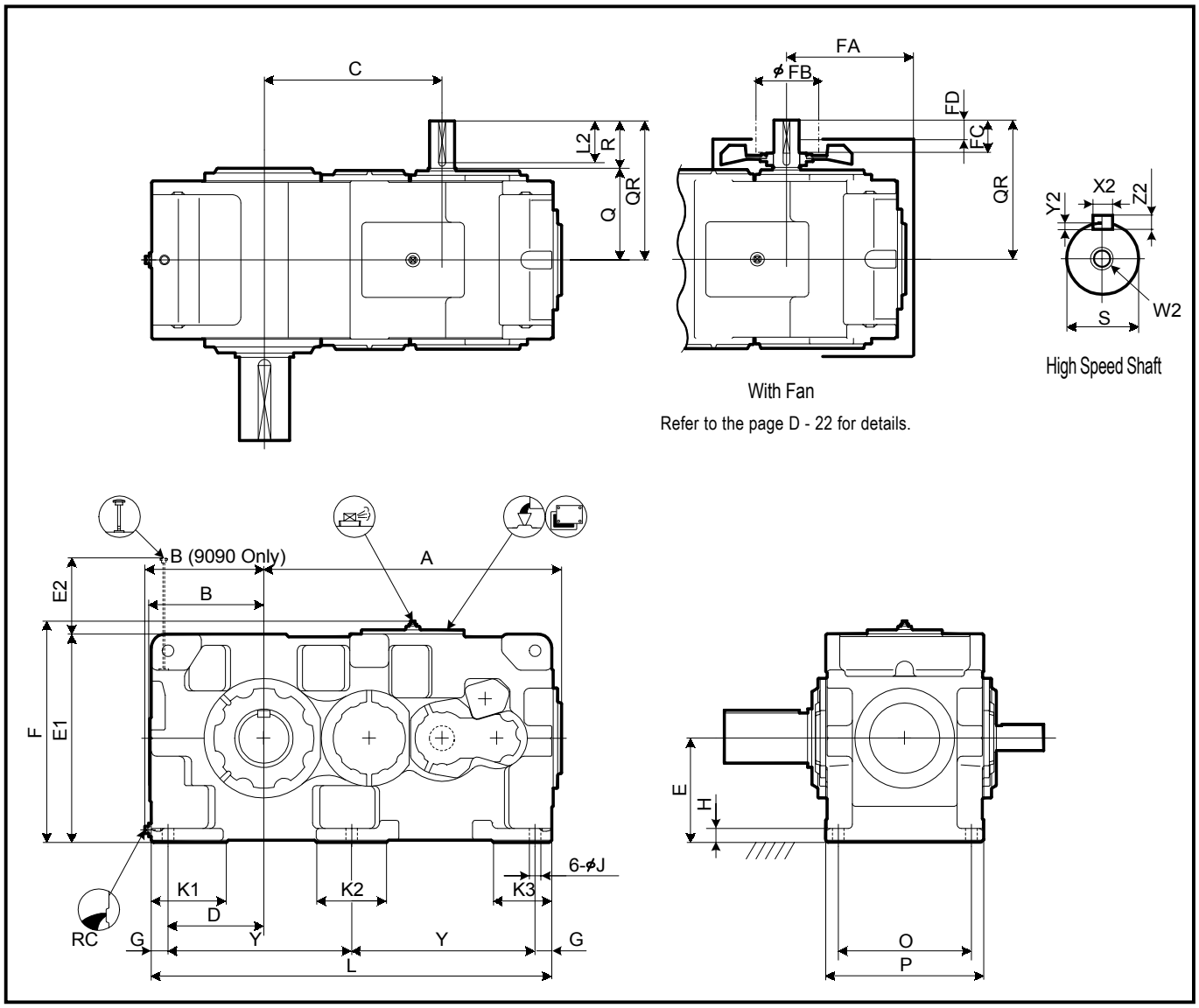

Size	A	B	C	D	E	E1	E2	F	G	H	J	K1	K2	K3	L	O	P	Y
9090	1070	428	640	345	375	750	274	797	60	50	42	270	250	210	1440	480	570	660
9095	1100	440	670	375	400	800	286	847	60	50	42	290	250	210	1500	480	570	690
9100	1204	450	724	375	425	850	299	897	70	55	48	300	280	240	1610	560	650	735
9105	1238	485	758	410	450	900	316	947	70	55	48	320	280	240	1680	560	650	770
9110	1354	500	824	420	475	950	321	997	75	60	56	340	310	260	1810	610	710	830
9115	1403	550	873	470	500	1000	333	1047	75	60	56	350	310	260	1910	610	710	880

Size	High Speed Shaft									Fan				RC	Wt.	Oil Qty.
	Q	QR	R	S	W2/Depth	Key				FA	FB	FC	FD		kg	L
						X2	Y2	Z2	L2							
9090	330	500	170	90m6	M24/50	25	9	14	150	465	250	135	90	1 1/2"	2050	120
9095	330	500	170	90m6	M24/50	25	9	14	150	465	250	135	90	1 1/2"	2300	140
9100	375	585	210	100m6	M24/50	28	10	16	190	515	250	175	130	1 1/2"	2730	170
9105	375	585	210	100m6	M24/50	28	10	16	190	515	250	175	130	1 1/2"	3290	205
9110	405	615	210	110m6	M24/50	28	10	16	190	565	250	175	130	1 1/2"	3960	240
9115	405	615	210	110m6	M24/50	28	10	16	190	565	250	175	130	1 1/2"	4410	290

Units:mm

1.Key and keyways are based on ISO R773-1969 Close keys(JIS B1301-1996 Parallel key in fastening type)
2.The oil quantity is approximate.Oil shall be supplied within the range shown on the oil gauge.
3. Refer to the page D - 16 for dimensions not shown in these drawings.
4. Refer to the page D - 30 for the dimension of optional parts.

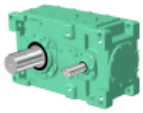

Slow Speed Shaft

Solid Shaft	Hollow Shaft (Shrink Disk Type)
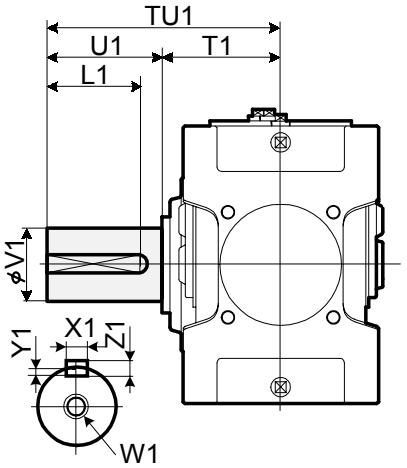	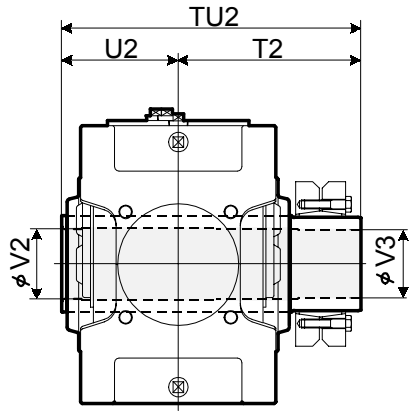 Refer to the page D - 18 for details.

Size	Solid Shaft									Hollow Shaft (Shrink Disk Type)				
	TU1	T1	U1	V1	W1/Depth	Key				TU2	T2	U2	V2	V3
						X1	Y1	Z1	L1					
9090	650	350	300	180m6	M30/60	45	15	25	270	844	494	350	193	190
9095	700	350	350	190m6	M30/60	45	15	25	320	859	509	350	203	200
9100	740	390	350	200m6	M30/60	45	15	25	320	934	544	390	213	210
9105	740	390	350	220m6	M30/60	50	17	28	320	949	559	390	223	220
9110	770	420	350	220m6	M30/60	50	17	28	320	1030	610	420	243	240
9115	830	420	410	240m6	M30/60	56	20	32	375	1065	645	420	253	250

Units:mm

Standard Shaft Arrangement Configuration

RL	RR	RB	LR	LL	LB	BL	BR	BB
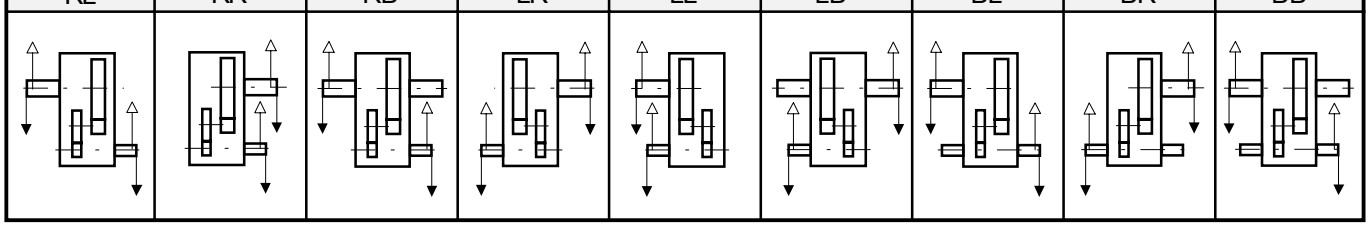								

Nomenclature

P H D [Size] P 2 - [Shaft Arrangement] [Low Speed Shaft Type] [Fan] - [Nominal Reduction Ratio]

Size: 9090, 9095, 9100, 9105, 9110, 9115

Shaft Arrangement: RL, RR, RB, LR, LL, LB, BL, BR, BB

Fan: (blank) :Without Fan; F :With Fan

Low Speed Shaft Type: (blank) : Solid Shaft; T : Hollow shaft (Shrink Disk type)

Size	Nominal Reduction Ratio										
	6.3	7.1	8	9	10	11.2	12.5	14	16	18	20
9090	O	O	O	O	O	O	O	O	O	O	
9095		O	O	O	O	O	O	O	O	O	O
9100	O	O	O	O	O	O	O	O	O	O	
9105		O	O	O	O	O	O	O	O	O	O
9110	O	O	O	O	O	O	O	O	O	O	
9115		O	O	O	O	O	O	O	O	O	O

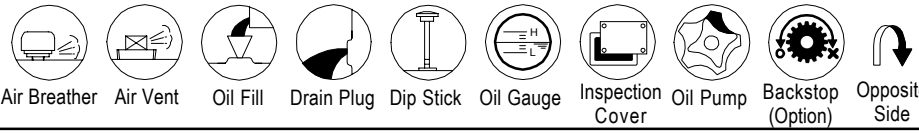

Air Breather, Air Vent, Oil Fill, Drain Plug, Dip Stick, Oil Gauge, Inspection Cover, Oil Pump, Backstop (Option), Opposite Side

Sumitomo Heavy Industries, Ltd.
http://www.shi.co.jp/ptc

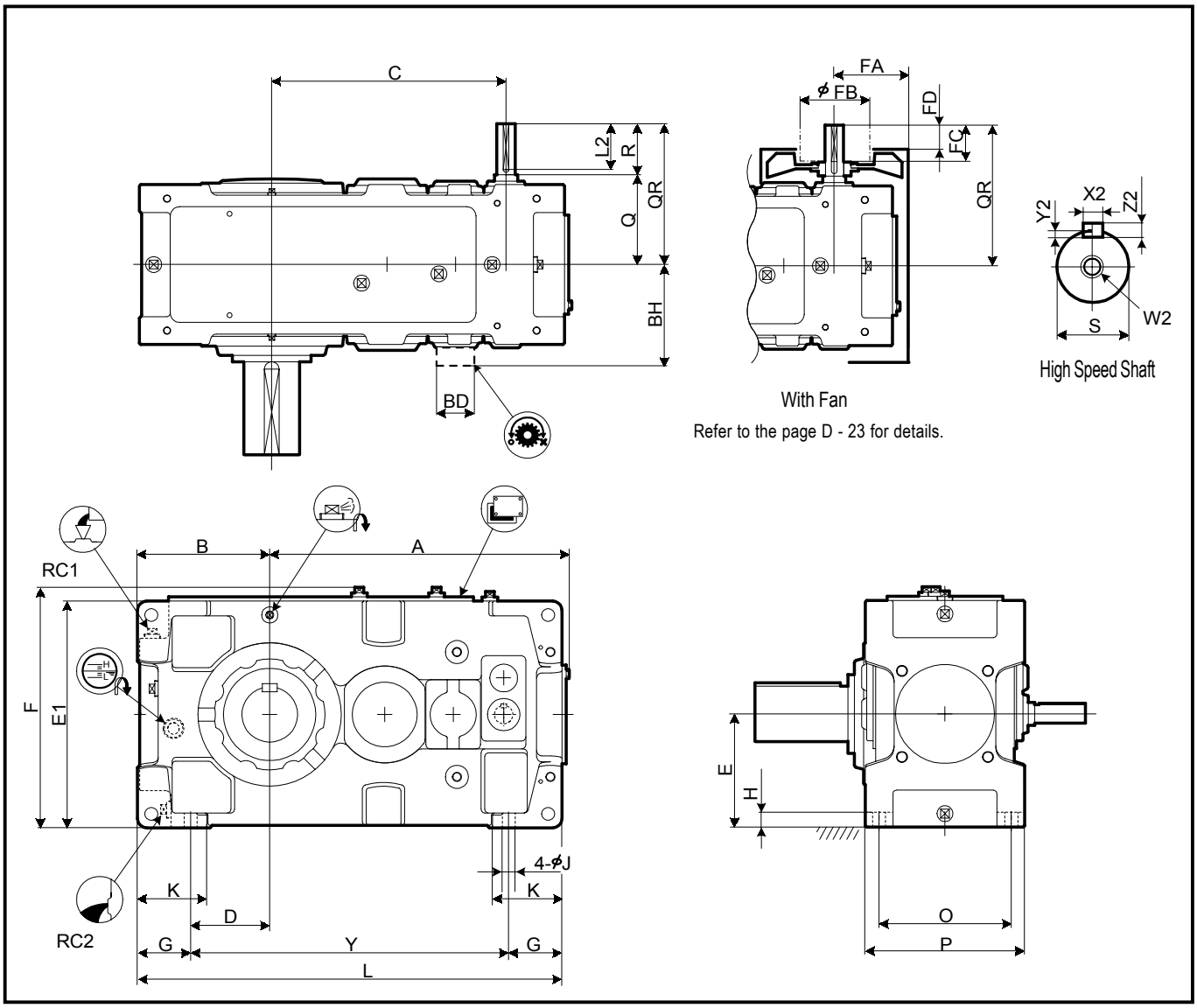

Size	A	B	C	D	E	E1	F	G	H	J	K	L	O	P	Y
9015	338	160	257	90	135	270	299	70	22	15	95	485	170	205	345
9025	408	175	306	95	155	310	338	80	25	19	110	570	195	235	410
9030	453	200	343	110	160	320	349	90	28	24	120	640	215	265	460
9035	484	219	374	129	185	370	399	90	28	24	120	690	215	265	510
9040	540	235	398	120	200	400	431	115	30	28	150	759	255	315	529
9050	609	255	467	138.5	210	420	451	116.5	32	28	150	848	285	345	615
9055	648	286	506	171	245	490	521	115	32	28	150	918	285	345	688

Size	High Speed Shaft									Fan				Backstop		RC1	RC2	Wt. kg	Oil Qty. L
	Q	QR	R	S	W2/Depth	Key				FA	FB	FC	FD	BD	BH				
						X2	Y2	Z2	L2										
9015	130	190	60	25k6	M10/22	8	4	7	50	111	125	30	10	90	187	3/4"	3/4"	105	5
9025	144	204	60	28k6	M10/22	8	4	7	50	129	125	30	10	95	187.5	3/4"	3/4"	150	8
9030	161	241	80	30k6	M10/22	8	4	7	70	140	125	50	30	100	200	3/4"	3/4"	205	10
9035	161	241	80	30k6	M10/22	8	4	7	70	150	140	50	22	100	200	3/4"	3/4"	225	13
9040	176	256	80	35k6	M12/28	10	5	8	70	170	140	50	22	125	235	1"	1"	305	19
9050	194	304	110	40k6	M16/36	12	5	8	95	172	140	80	52	130	240	1"	1"	445	24
9055	194	304	110	40k6	M16/36	12	5	8	95	172	140	80	52	130	240	1"	1"	505	29

Units:mm

1.Key and keyways are based on ISO R773-1969 Close keys(JIS B1301-1996 Parallel key in fastening type)
2.The oil quantity is approximate.Oil shall be supplied within the range shown on the oil gauge.
3. Refer to the page D - 13 for dimensions not shown in these drawings.
4. Refer to the page D - 24 for the dimension of optional parts.

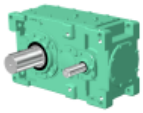

Slow Speed Shaft

Solid Shaft	Hollow Shaft (Shrink Disk Type)	Hollow Shaft (KeyType)
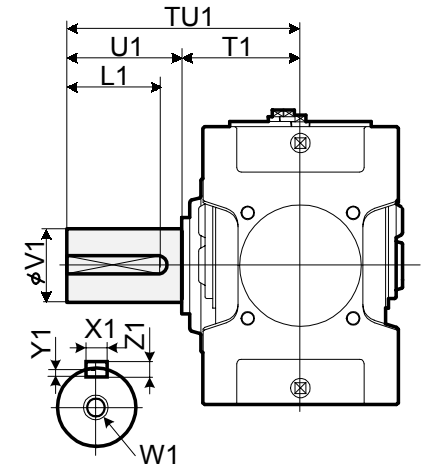	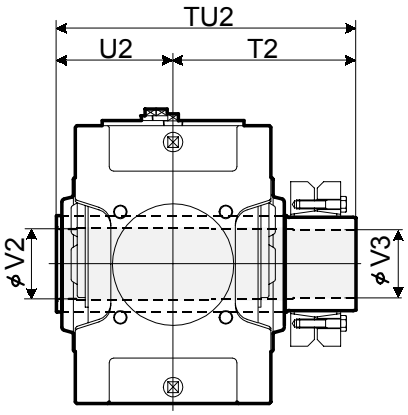 Refer to the page D-18 for details.	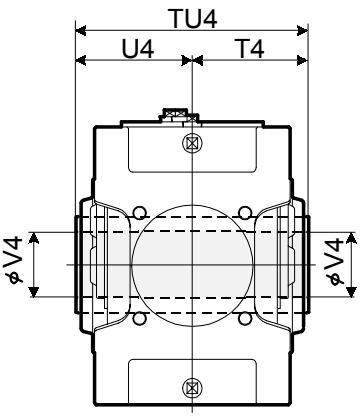 Refer to the page D -19 for details.

Size	Solid Shaft									Hollow Shaft (Shrink Disk Type)					Hollow Shaft (Key Type)			
	TU1	T1	U1	V1	W1/Depth	Key				TU2	T2	U2	V2	V3	TU4	T4	U4	V4
						X1	Y1	Z1	L1									
9015	245	135	110	58m6	M20/42	18	7	11	95	328	193	135	63	60	270	135	135	55
9025	285	145	140	70m6	M20/42	20	7.5	12	125	358	213	145	73	70	300	150	150	65
9030	330	160	170	80m6	M20/42	22	9	14	150	393	233	160	83	80	330	165	165	75
9035	330	160	170	90m6	M20/42	25	9	14	150	403	243	160	88	85	330	165	165	85
9040	349	179	170	95m6	M24/50	25	9	14	150	448	268	180	98	95	360	180	180	90
9050	411	201	210	110m6	M24/50	28	10	16	190	503	303	200	108	105	410	205	205	105
9055	411	201	210	120m6	M24/50	32	11	18	185	528	323	205	123	120	410	205	205	115

Units:mm

Standard Shaft Arrangement Configuration

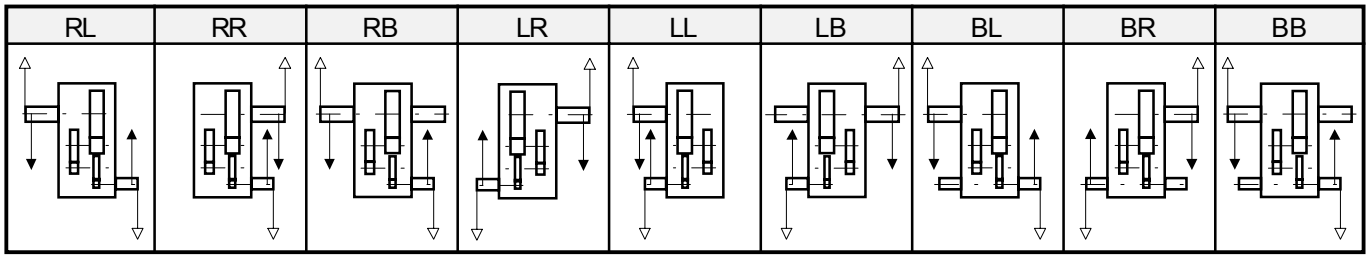

Nomenclature

P H A [Size] P 3 - [Shaft Arrangement] [Low Speed Shaft Type] [Fan] - [Nominal Reduction Ratio]

Size: 9015, 9025, 9030, 9035, 9040, 9050, 9055

Shaft Arrangement: RL, RR, RB, LR, LL, LB, BL, BR, BB

Fan:
- (blank) : Without Fan
- F : With Fan

Low Speed Shaft Type:
- (blank) : Solid Shaft
- T : Hollow shaft (Shrink Disk type)
- K : Hollow shaft (Key type)

Size	Nominal Reduction Ratio													
	20	22.4	25	28	31.5	35.5	40	45	50	56	63	71	80	90
9015	O	O	O	O	O	O	O	O						
9025	O	O	O	O	O	O	O	O						
9030	O	O	O	O	O	O	O	O	O	O	O	O		
9035			O	O	O	O	O	O	O	O	O	O	O	O
9040	O	O	O	O	O	O	O	O	O	O	O	O		
9050	O	O	O	O	O	O	O	O	O	O	O	O		
9055			O	O	O	O	O	O	O	O	O	O	O	O

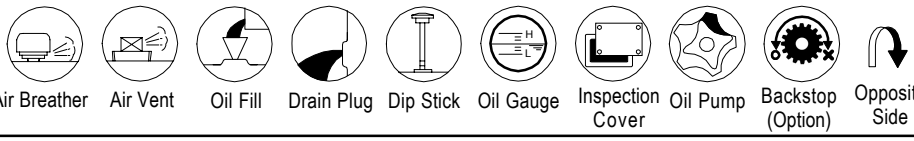

Air Breather | Air Vent | Oil Fill | Drain Plug | Dip Stick | Oil Gauge | Inspection Cover | Oil Pump | Backstop (Option) | Opposite Side

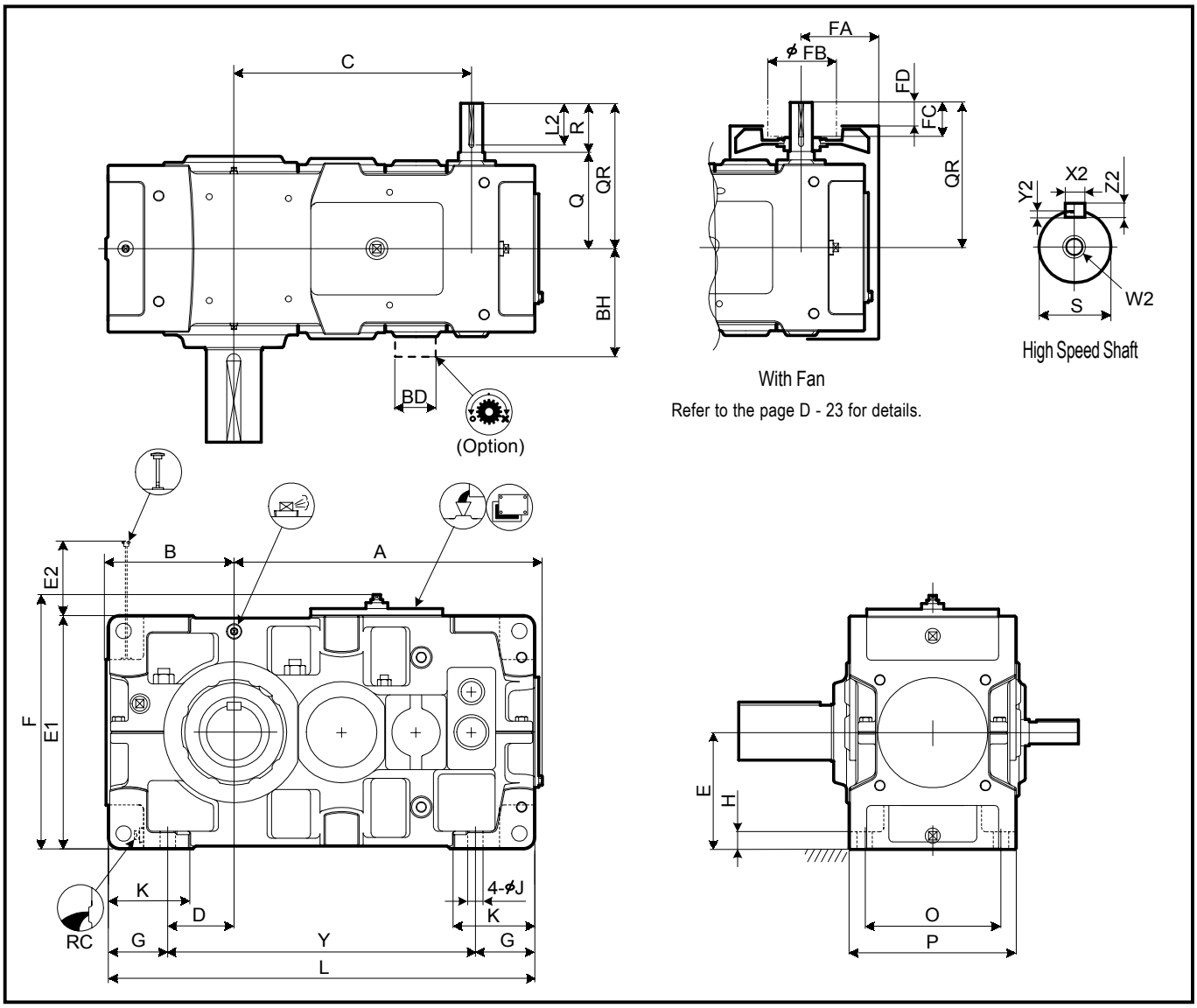

Size	A	B	C	D	E	E1	E2	F	G	H	J	K	L	O	P	Y
9060	701	291	540	151	265	530	155	578	135	35	35	180	970	310	380	700
9070	809	328	630	163	300	600	181	648	160	40	42	215	1115	350	430	795
9075	862	375	683	210	335	670	146	718	160	52	42	220	1215	350	430	895
9080	932	370	725	205	335	670	205	718	160	52	42	220	1275	380	460	955
9085	988	414	781	249	375	750	165	798	160	52	42	220	1375	380	460	1055

Size	High Speed Shaft									Fan				Backstop		RC	Wt. kg	Oil Qty. L
	Q	QR	R	S	W2/Depth	Key				FA	FB	FC	FD	BD	BH			
						X2	Y2	Z2	L2									
9060	219	329	110	50k6	M16/36	14	5.5	9	95	199	160	80	52	150	266	1"	660	33
9070	244	354	110	55m6	M20/42	16	6	10	95	221	160	80	52	175	308	1"	940	49
9075	244	354	110	55m6	M20/42	16	6	10	95	221	160	80	52	175	308	1"	1160	59
9080	265	405	140	65m6	M20/42	18	7	11	125	247	200	105	65	190	353	1"	1350	64
9085	265	405	140	65m6	M20/42	18	7	11	125	247	200	105	65	190	353	1"	1610	80

Units:mm

1.Key and keyways are based on ISO R773-1969 Close keys(JIS B1301-1996 Parallel key in fastening type)
2.The oil quantity is approximate.Oil shall be supplied within the range shown on the oil gauge.
3. Refer to the page D - 15 for dimensions not shown in these drawings.
4. Refer to the page D - 27 for the dimension of optional parts.

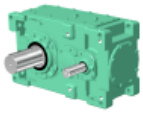

Slow Speed Shaft

Solid Shaft	Hollow Shaft (Shrink Disk Type)	Hollow Shaft (KeyType)
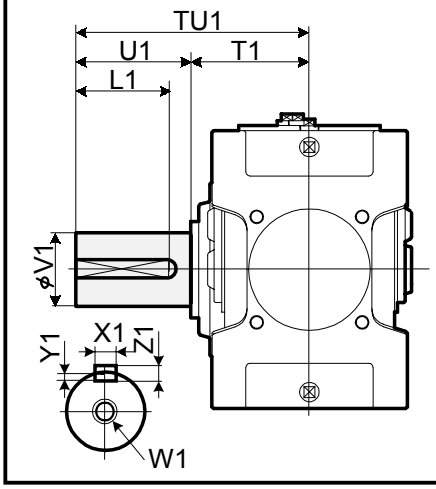	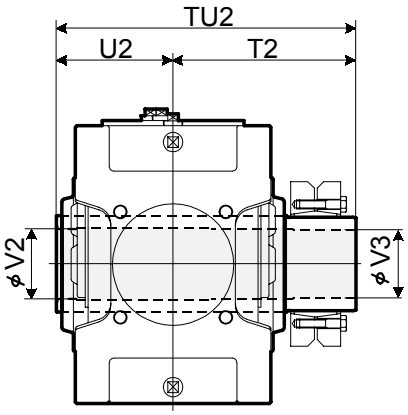	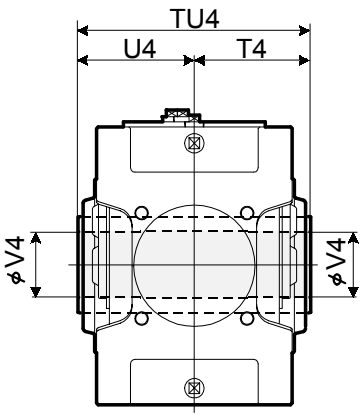
	Refer to the page D-18 for details.	Refer to the page D -19 for details.

Size	Solid Shaft									Hollow Shaft (Shrink Disk Type)					Hollow Shaft (Key Type)			
	TU1	T1	U1	V1	W1/Depth	Key				TU2	T2	U2	V2	V3	TU4	T4	U4	V4
						X1	Y1	Z1	L1									
9060	440	230	210	125m6	M24/50	32	11	18	185	583	353	230	128	125	470	235	235	125
9070	509	259	250	145m6	M30/60	36	12	20	225	644	384	260	148	145	530	265	265	145
9075	562	262	300	160m6	M30/60	40	13	22	275	651	386	265	158	155	530	265	265	150
9080	582	282	300	165m6	M30/60	40	13	22	275	714	429	285	173	170	570	285	285	165
9085	585	285	300	175m6	M30/60	45	15	25	270	714	429	285	183	180	570	285	285	175

Units:mm

Standard Shaft Arrangement Configuration

RL	RR	RB	LR	LL	LB	BL	BR	BB
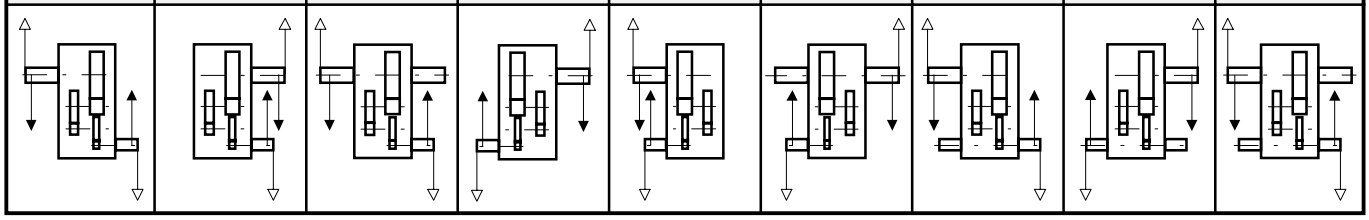								

Nomenclature

P H D [Size] P 3 - [Shaft Arrangement] [Low Speed Shaft Type] [Fan] - [Nominal Reduction Ratio]

Size: 9060, 9070, 9075, 9080, 9085

Shaft Arrangement: RL, RR, RB, LR, LL, LB, BL, BR, BB

Low Speed Shaft Type:
- (blank) : Solid Shaft
- T : Hollow shaft (Shrink Disk type)
- K : Hollow shaft (Key type)

Fan:
- (blank) : Without Fan
- F : With Fan

Size	Nominal Reduction Ratio													
	20	22.4	25	28	31.5	35.5	40	45	50	56	63	71	80	90
9060	O	O	O	O	O	O	O	O	O	O	O	O		
9070	O	O	O	O	O	O	O	O	O	O	O	O		
9075			O	O	O	O	O	O	O	O	O	O	O	O
9080	O	O	O	O	O	O	O	O	O	O	O	O		
9085			O	O	O	O	O	O	O	O	O	O	O	O

Air Breather | Air Vent | Oil Fill | Drain Plug | Dip Stick | Oil Gauge | Inspection Cover | Oil Pump | Backstop (Option) | Opposite Side

Sumitomo Heavy Industries, Ltd.
http://www.shi.co.jp/ptc

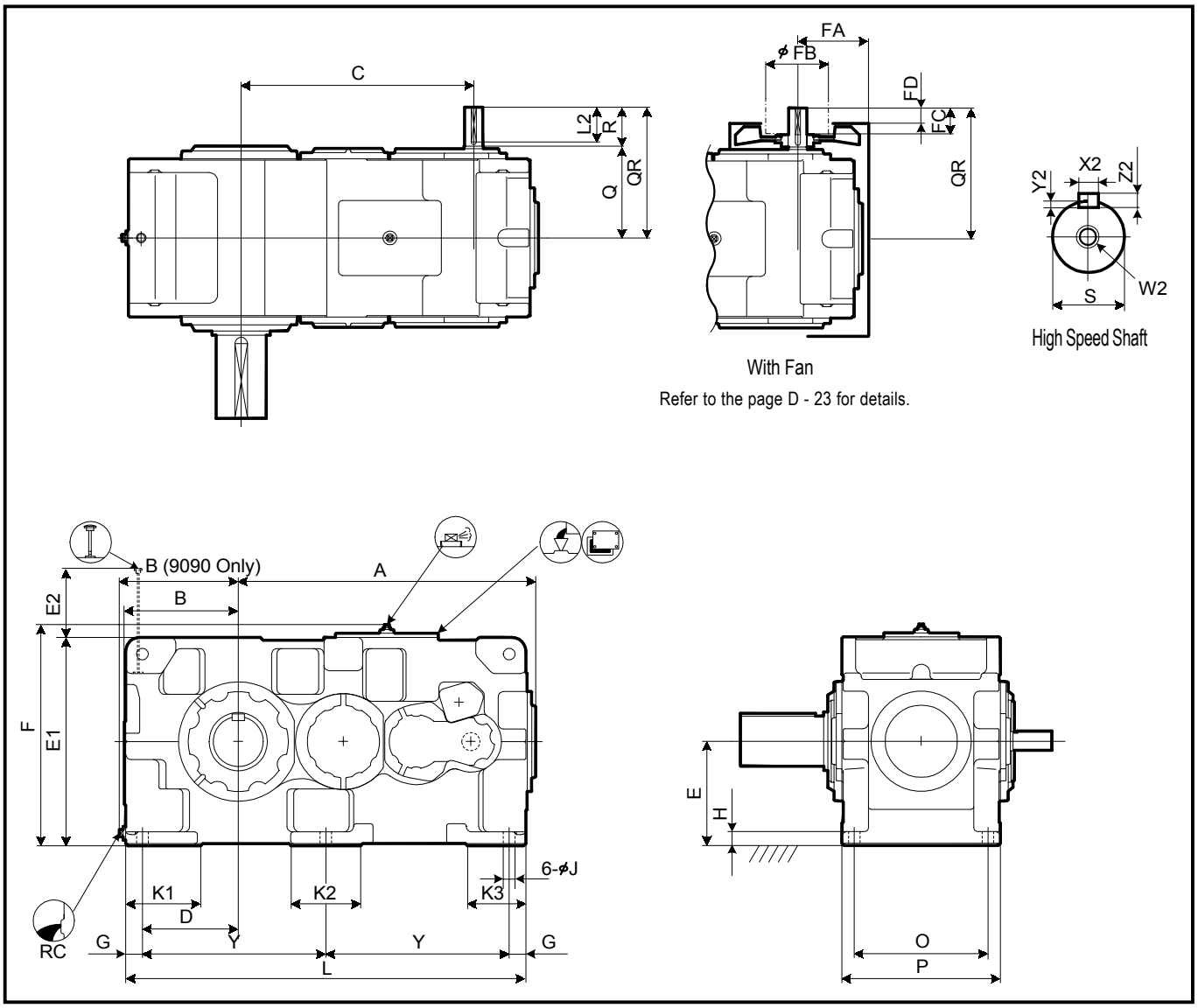

Size	A	B	C	D	E	E1	E2	F	G	H	J	K1	K2	K3	L	O	P	Y
9090	1070	428	837	345	375	750	249	797	60	50	42	270	250	210	1440	480	570	660
9095	1100	440	867	375	400	800	254	847	60	50	42	290	250	210	1500	480	570	690
9100	1204	450	950	375	425	850	273	897	70	55	48	300	280	240	1610	560	650	735
9105	1238	485	984	410	450	900	278	947	70	55	48	320	280	240	1680	560	650	770
9110	1354	500	1050	420	475	950	283	997	75	60	56	340	310	260	1810	610	710	830
9115	1403	550	1099	470	500	1000	282	1047	75	60	56	350	310	260	1910	610	710	880

Size	High Speed Shaft									Fan				RC	Wt. kg	Oil Qty. L
	Q	QR	R	S	W2/Depth	Key				FA	FB	FC	FD			
						X2	Y2	Z2	L2							
9090	330	470	140	65m6	M20/42	18	7	11	125	268	200	105	65	1 1/2"	2100	120
9095	330	470	140	65m6	M20/42	18	7	11	125	268	200	105	65	1 1/2"	2350	155
9100	375	515	140	75m6	M20/42	20	7.5	12	125	289	225	105	65	1 1/2"	2780	180
9105	375	515	140	75m6	M20/42	20	7.5	12	125	289	225	105	65	1 1/2"	3340	225
9110	405	575	170	80m6	M20/42	22	9	14	150	339	225	135	95	1 1/2"	4010	260
9115	405	575	170	80m6	M20/42	22	9	14	150	339	225	135	95	1 1/2"	4460	325

Units:mm

1.Key and keyways are based on ISO R773-1969 Close keys(JIS B1301-1996 Parallel key in fastening type)
2.The oil quantity is approximate.Oil shall be supplied within the range shown on the oil gauge.
3. Refer to the page D - 16 for dimensions not shown in these drawings.
4. Refer to the page D - 30 for the dimension of optional parts.

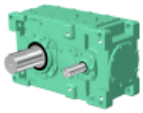

Slow Speed Shaft

Solid Shaft	Hollow Shaft (Shrink Disk Type)
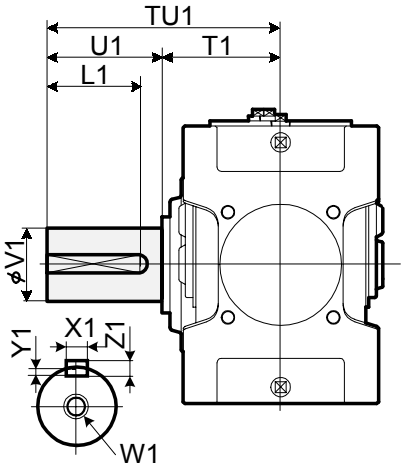	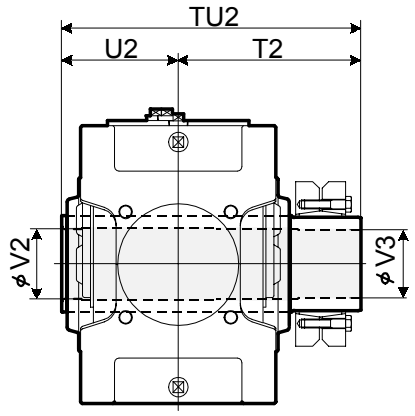 Refer to the page D - 18 for details.

Size	Solid Shaft									Hollow Shaft (Shrink Disk Type)				
	TU1	T1	U1	V1	W1/Depth	Key				TU2	T2	U2	V2	V3
						X1	Y1	Z1	L1					
9090	650	350	300	180m6	M30/60	45	15	25	270	844	494	350	193	190
9095	700	350	350	190m6	M30/60	45	15	25	320	859	509	350	203	200
9100	740	390	350	200m6	M30/60	45	15	25	320	934	544	390	213	210
9105	740	390	350	220m6	M30/60	50	17	28	320	949	559	390	223	220
9110	770	420	350	220m6	M30/60	50	17	28	320	1030	610	420	243	240
9115	830	420	410	240m6	M30/60	56	20	32	375	1065	645	420	253	250

Units:mm

Standard Shaft Arrangement Configuration

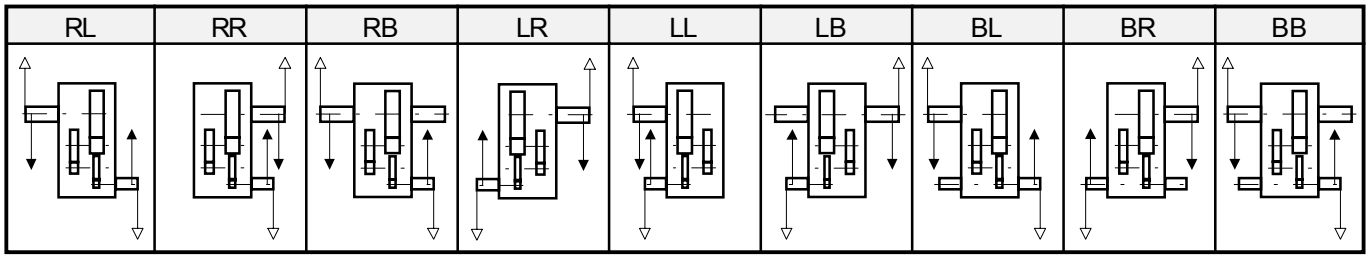

Nomenclature

P H D [Size] P 3 - [Shaft Arrangement] [Low Speed Shaft Type] [Fan] - [Nominal Reduction Ratio]

Size: 9090, 9095, 9100, 9105, 9110, 9115

Shaft Arrangement: RL, RR, RB, LR, LL, LB, BL, BR, BB

Fan: (blank) :Without Fan; F :With Fan

Low Speed Shaft Type: (blank) : Solid Shaft; T : Hollow shaft (Shrink Disk type)

SIZE	Nominal Reduction Ratio													
	20	22.4	25	28	31.5	35.5	40	45	50	56	63	71	80	90
9090	O	O	O	O	O	O	O	O	O	O	O	O	O	
9095		O	O	O	O	O	O	O	O	O	O	O	O	O
9100	O	O	O	O	O	O	O	O	O	O	O	O	O	
9105		O	O	O	O	O	O	O	O	O	O	O	O	O
9110	O	O	O	O	O	O	O	O	O	O	O	O	O	
9115		O	O	O	O	O	O	O	O	O	O	O	O	O

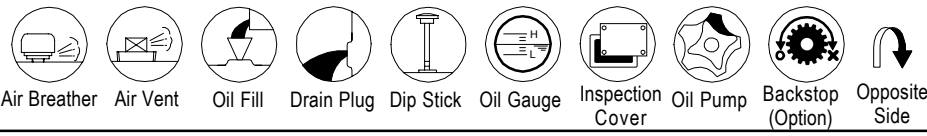

Air Breather, Air Vent, Oil Fill, Drain Plug, Dip Stick, Oil Gauge, Inspection Cover, Oil Pump, Backstop (Option), Opposite Side

Sumitomo Heavy Industries, Ltd.
http://www.shi.co.jp/ptc

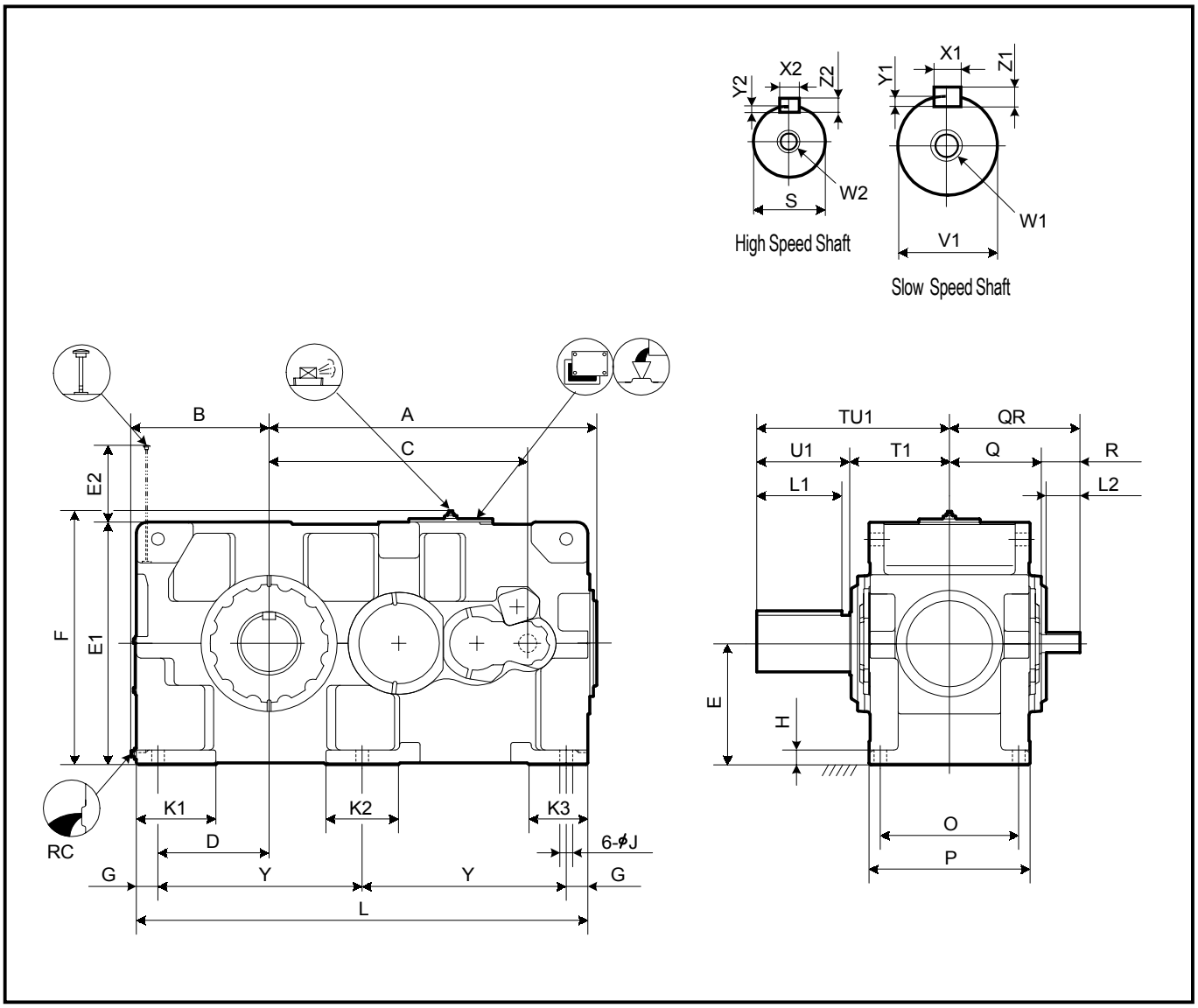

Size	A	B	C	D	E	E1	E2	F	G	H	J	K1	K2	K3	L	O	P	Y
9118	1444	608	1140	490	535	1070	338	1117	95	65	56	350	320	260	1990	610	710	900
9121	1585	663	1290	545	580	1160	347	1207	95	70	56	390	300	270	2180	680	780	995
9126	1585	663	1290	545	580	1160	347	1207	95	70	56	390	300	270	2180	680	780	995

Size	High Speed Shaft									RC	Wt. kg	Oil Qty. L
	Q	QR	R	S	W2/Depth	Key						
						X2	Y2	Z2	L2			
9118	405	575	170	80m6	M20/42	22	9	14	150	1 1/2"	5050	350
9121	440	650	210	100m6	M24/50	28	10	16	190	1 1/2"	6050	470
9126	440	650	210	100m6	M24/50	28	10	16	190	1 1/2"	6350	470

Size	Solid Shaft								
	TU1	T1	U1	V1	W1/Depth	Key			
						X1	Y1	Z1	L1
9118	850	440	410	260m6	M36/70	56	20	32	375
9121	935	465	470	280m6	M36/70	63	20	32	425
9126	935	465	470	300m6	M36/70	70	22	36	425

Units:mm

1.Key and keyways are based on ISO R773-1969 Close keys(JIS B1301-1996 Parallel key in fastening type)
2.The oil quantity is approximate.Oil shall be supplied within the range shown on the oil gauge.
3. Consult us for dimensions not shown in these drawings.

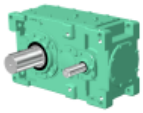

Standard Shaft Arrangement Configuration

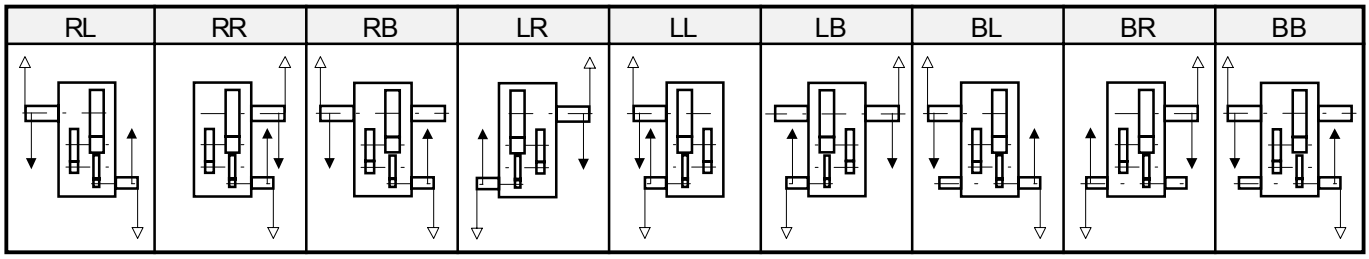

Nomenclature

P H D [ ] P 3 - [ ] [ ] - [ ]

Size: 9118, 9121, 9126

Shaft Arrangement: RL, RR, RB, LR, LL, LB, BL, BR, BB

Fan: (blank) :Without Fan; F :With Fan

Nominal Reduction Ratio

Size	22.4	25	28	31.5	35.5	40	45	50	56	63	71	80	90
9118		O		O	O	O	O	O	O	O	O	O	O
9121			O	O	O	O	O	O	O	O	O	O	O
9126			O	O	O	O	O	O	O	O	O	O	O

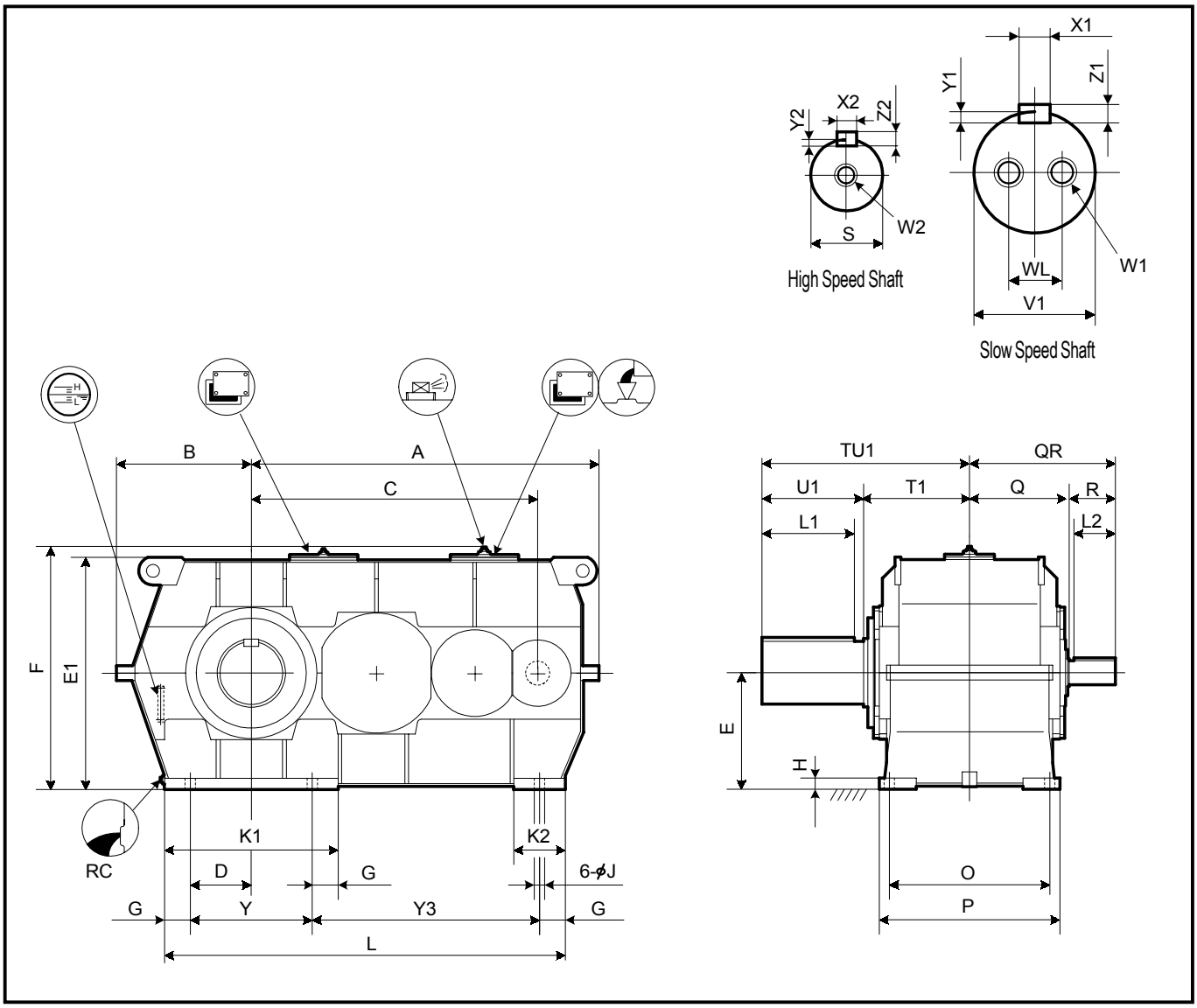

Size	A	B	C	D	E	E1	F	G	H	J	K1	K2	L	O	P	Y	Y3
9128	1720	680	1413	330	600	1194	1241	140	55	66	940	280	1990	710	840	660	1050
9131	1882	730	1550	330	630	1256	1303	140	60	66	940	280	2170	850	980	660	1230
9136	1882	730	1550	330	630	1256	1303	140	60	66	940	280	2170	850	980	660	1230

Size	High Speed Shaft									RC	Wt. kg	Oil Qty. L
	Q	QR	R	S	W2/Depth	Key						
						X2	Y2	Z2	L2			
9128	470	680	210	100m6	M24/50	28	10	16	190	1 1/2"	7250	390
9131	540	790	250	130m6	M24/50	32	11	18	225	1 1/2"	9550	550
9136	540	790	250	130m6	M24/50	32	11	18	225	1 1/2"	9900	540

Size	Solid Shaft									
	TU1	T1	U1	V1	W1/Depth	WL	Key			
							X1	Y1	Z1	L1
9128	950	480	470	320m6	M36/70	200	70	22	36	425
9131	1100	550	550	340m6	M36/70	215	80	25	40	500
9136	1110	560	550	360m6	M36/70	230	80	25	40	500

Units:mm

1.Key and keyways are based on ISO R773-1969 Close keys(JIS B1301-1996 Parallel key in fastening type)
2.The oil quantity is approximate.Oil shall be supplied within the range shown on the oil gauge.
3. Consult us for dimensions not shown in these drawings.

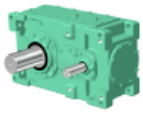

Standard Shaft Arrangement Configuration

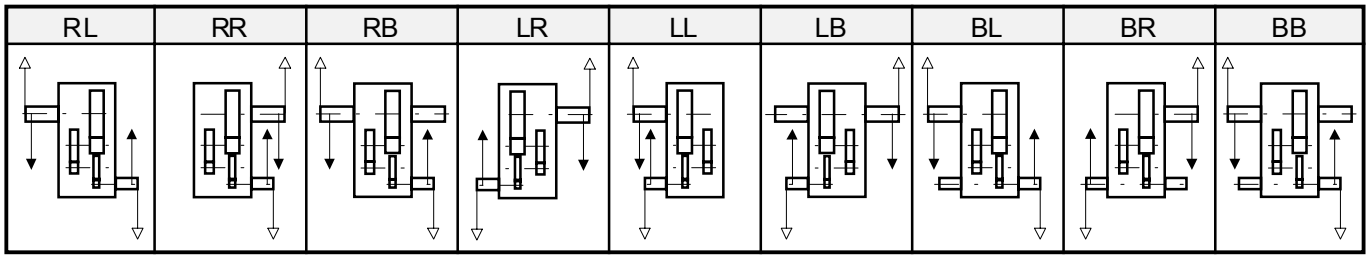

Nomenclature

P H D [ ] P 3 A - [ ] [ ] - [ ]

Size: 9128, 9131, 9136

Shaft Arrangement: RL, RR, RB, LR, LL, LB, BL, BR, BB

Fan: (blank) :Without Fan; F :With Fan

Nominal Reduction Ratio

Size	22.4	25	28	31.5	35.5	40	45	50	56	63	71	80	90
9128			O	O	O	O	O	O	O	O	O	O	O
9131	O	O	O	O	O	O	O	O	O	O	O		
9136	O	O	O	O	O	O	O	O	O	O	O		

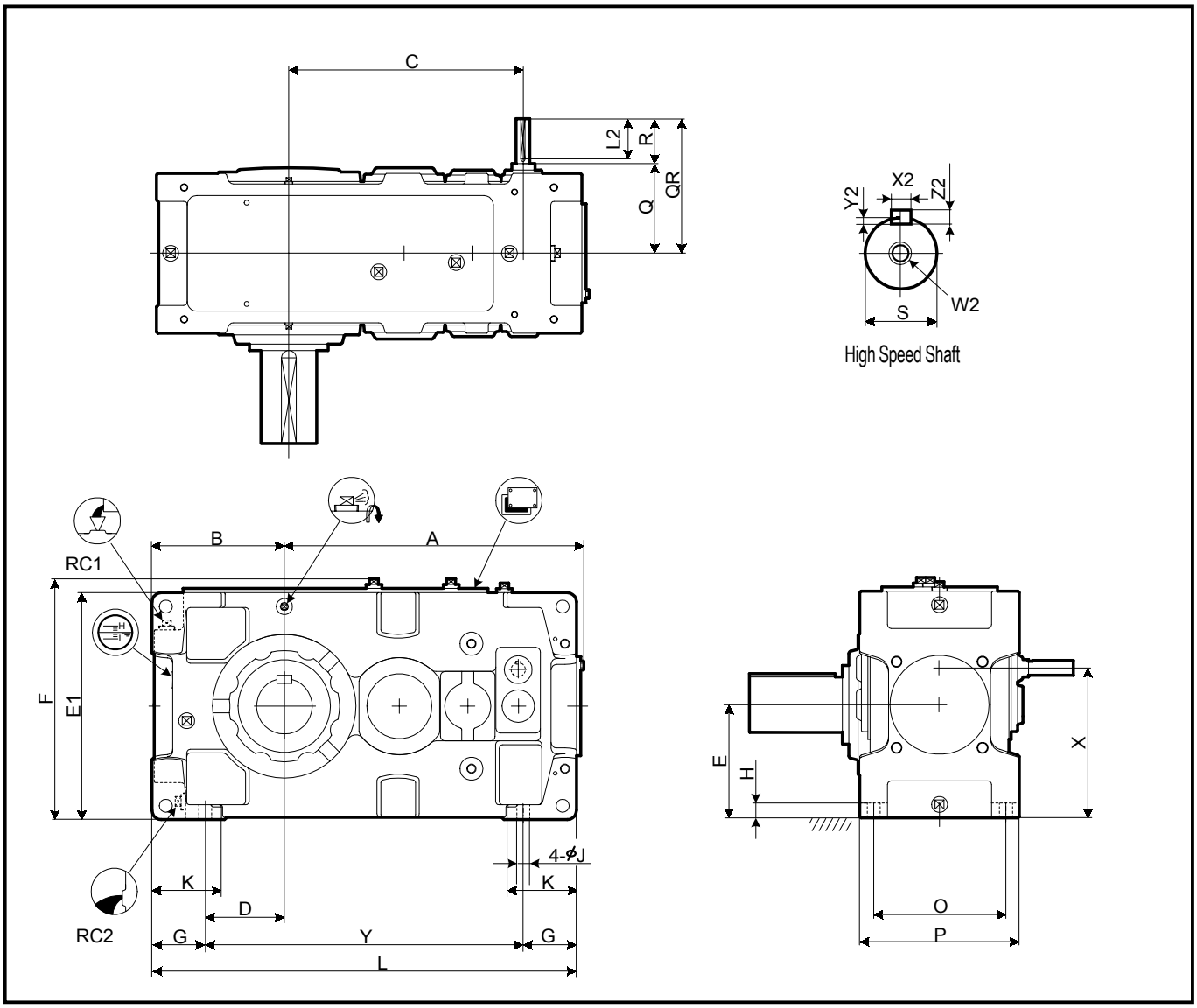

Size	A	B	C	D	E	E1	F	G	H	J	K	L	O	P	X	Y
9030	453	200	343	110	160	320	349	90	28	24	120	640	215	265	223	460
9035	484	219	374	129	185	370	399	90	28	24	120	690	215	265	248	510
9040	540	235	398	120	200	400	431	115	30	28	150	759	255	315	279	529
9050	609	255	467	138.5	210	420	451	116.5	32	28	150	848	285	345	289	615
9055	648	286	506	171	245	490	521	115	32	28	150	918	285	345	324	688

Size	High Speed Shaft									RC1	RC2	Wt.	Oil Qty.
	Q	QR	R	S	W2/Depth	Key							
						X2	Y2	Z2	L2			kg	L
9030	159	219	60	25k6	M10/22	8	4	7	50	3/4"	3/4"	210	14
9035	159	219	60	25k6	M10/22	8	4	7	50	3/4"	3/4"	230	17
9040	175	235	60	28k6	M10/22	8	4	7	50	1"	1"	310	25
9050	195	275	80	30k6	M10/22	8	4	7	70	1"	1"	450	32
9055	195	275	80	30k6	M10/22	8	4	7	70	1"	1"	510	40

Units:mm

1.Key and keyways are based on ISO R773-1969 Close keys(JIS B1301-1996 Parallel key in fastening type)
2.The oil quantity is approximate.Oil shall be supplied within the range shown on the oil gauge.
3. Refer to the page D - 13 for dimensions not shown in these drawings.
4. Refer to the page D - 24 for the dimension of optional parts.

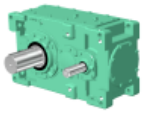

Slow Speed Shaft

Solid Shaft	Hollow Shaft (Shrink Disk Type)	Hollow Shaft (KeyType)
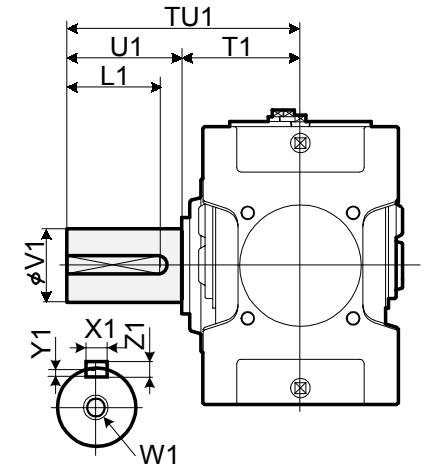	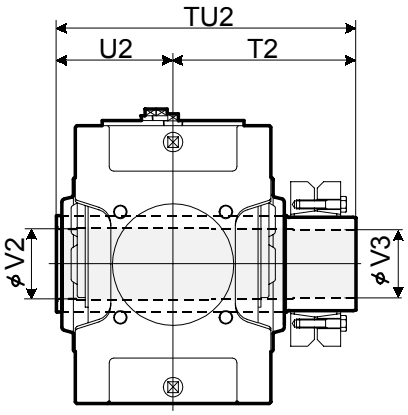 Refer to the page D-18 for details.	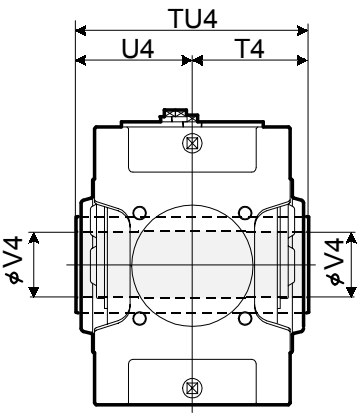 Refer to the page D -19 for details.

Size	Solid Shaft									Hollow Shaft (Shrink Disk Type)					Hollow Shaft (Key Type)			
	TU1	T1	U1	V1	W1/Depth	Key				TU2	T2	U2	V2	V3	TU4	T4	U4	V4
						X1	Y1	Z1	L1									
9030	330	160	170	80m6	M20/42	22	9	14	150	393	233	160	83	80	330	165	165	75
9035	330	160	170	90m6	M20/42	25	9	14	150	403	243	160	88	85	330	165	165	85
9040	349	179	170	95m6	M24/50	25	9	14	150	448	268	180	98	95	360	180	180	90
9050	411	201	210	110m6	M24/50	28	10	16	190	503	303	200	108	105	410	205	205	105
9055	411	201	210	120m6	M24/50	32	11	18	185	528	323	205	123	120	410	205	205	115

Units:mm

Standard Shaft Arrangement Configuration

RL	RR	RB	LR	LL	LB	BL	BR	BB
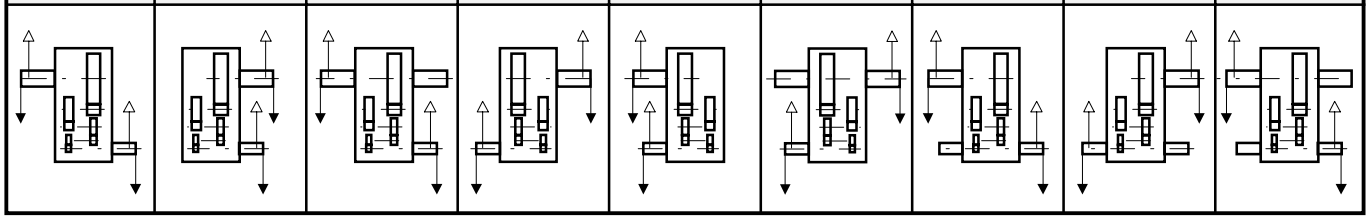								

Nomenclature

P H A [ ] P 4 - [ ] [ ] - [ ]

Size: 9030, 9035, 9040, 9050, 9055

Shaft Arrangement: RL, RR, RB, LR, LL, LB, BL, BR, BB

Low Speed Shaft Type:
(blank) : Solid Shaft
T : Hollow shaft (Shrink Disk type)
K : Hollow shaft (Key type)

Nominal Reduction Ratio

Size	80	90	100	112	125	140	160	180	200	224	250	280	315	355	400	450	500
9030	O	O	O	O	O	O	O	O	O	O							
9035			O	O	O	O	O	O	O	O	O	O					
9040	O	O	O	O	O	O	O	O	O	O							
9050	O	O	O	O	O	O	O	O	O	O	O	O	O	O	O		
9055			O	O	O	O	O	O	O	O	O	O	O	O	O	O	O

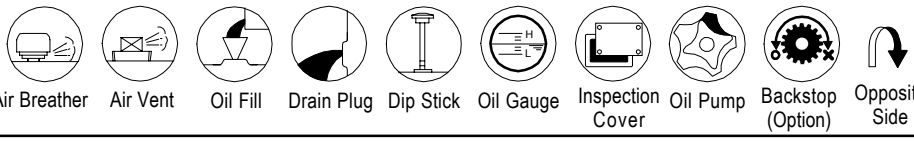

Air Breather | Air Vent | Oil Fill | Drain Plug | Dip Stick | Oil Gauge | Inspection Cover | Oil Pump | Backstop (Option) | Opposite Side

Sumitomo Heavy Industries, Ltd.
http://www.shi.co.jp/ptc

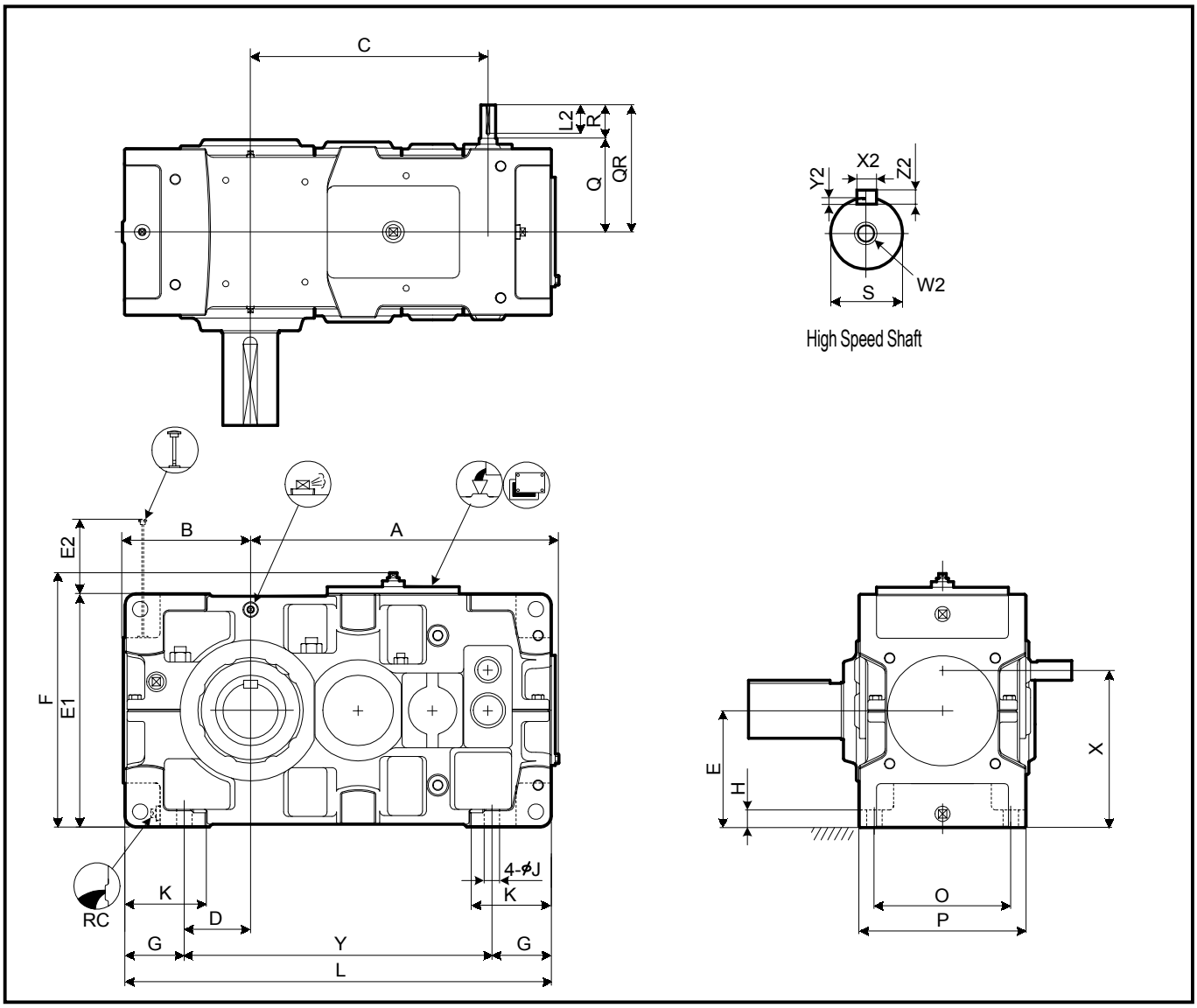

Size	A	B	C	D	E	E1	E2	F	G	H	J	K	L	O	P	X	Y
9060	701	291	540	151	265	530	126	578	135	35	35	180	970	310	380	357	700
9070	809	328	630	163	300	600	144	648	160	40	42	215	1115	350	430	409	795
9075	862	375	683	210	335	670	109	718	160	52	42	220	1215	350	430	444	895
9080	932	370	725	205	335	670	167	718	160	52	42	220	1275	380	460	461	955
9085	988	414	781	249	375	750	127	798	160	52	42	220	1375	380	460	501	1055

Size	High Speed Shaft									RC	Wt.	Oil Qty.
	Q	QR	R	S	W2/Depth	Key						
						X2	Y2	Z2	L2		kg	L
9060	221	301	80	35k6	M12/28	10	5	8	70	1"	660	37
9070	244	354	110	40k6	M16/36	12	5	8	95	1"	950	56
9075	244	354	110	40k6	M16/36	12	5	8	95	1"	1170	67
9080	264	374	110	45k6	M16/36	14	5.5	9	95	1"	1360	73
9085	264	374	110	45k6	M16/36	14	5.5	9	95	1"	1620	90

Units:mm

1.Key and keyways are based on ISO R773-1969 Close keys(JIS B1301-1996 Parallel key in fastening type)
2.The oil quantity is approximate.Oil shall be supplied within the range shown on the oil gauge.
3. Refer to the page D - 15 for dimensions not shown in these drawings.
4. Refer to the page D - 27 for the dimension of optional parts.

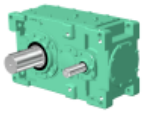

Slow Speed Shaft

Solid Shaft	Hollow Shaft (Shrink Disk Type)	Hollow Shaft (KeyType)

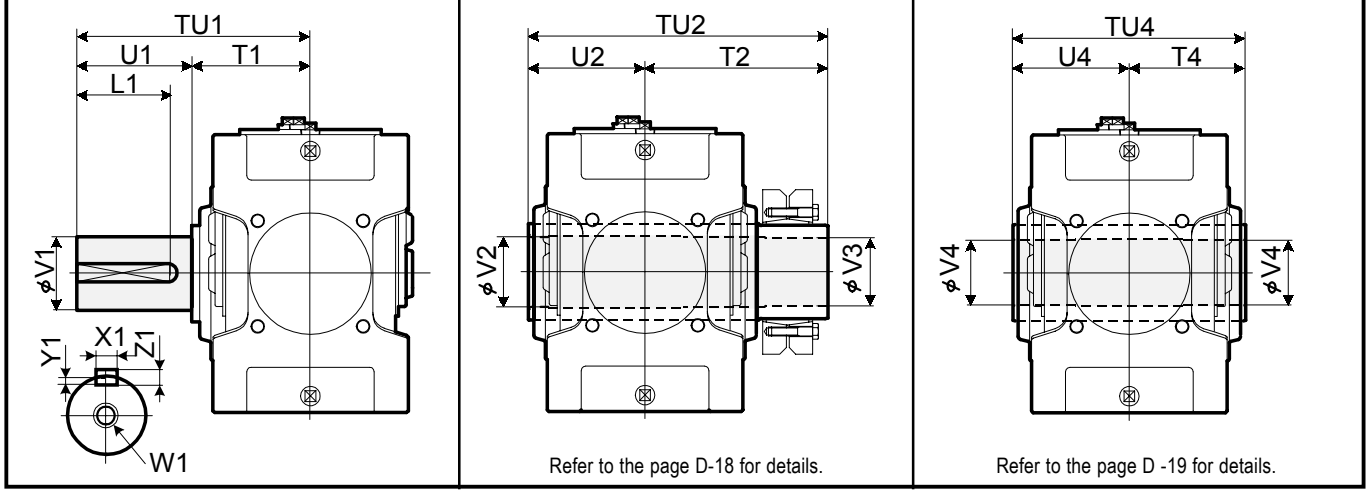

Refer to the page D-18 for details.

Refer to the page D -19 for details.

Size	Solid Shaft									Hollow Shaft (Shrink Disk Type)					Hollow Shaft (Key Type)			
	TU1	T1	U1	V1	W1/Depth	Key				TU2	T2	U2	V2	V3	TU4	T4	U4	V4
						X1	Y1	Z1	L1									
9060	440	230	210	125m6	M24/50	32	11	18	185	583	353	230	128	125	470	235	235	125
9070	509	259	250	145m6	M30/60	36	12	20	225	644	384	260	148	145	530	265	265	145
9075	562	262	300	160m6	M30/60	40	13	22	275	651	386	265	158	155	530	265	265	150
9080	582	282	300	165m6	M30/60	40	13	22	275	714	429	285	173	170	570	285	285	165
9085	585	285	300	175m6	M30/60	45	15	25	270	714	429	285	183	180	570	285	285	175

Units:mm

Standard Shaft Arrangement Configuration

RL	RR	RB	LR	LL	LB	BL	BR	BB

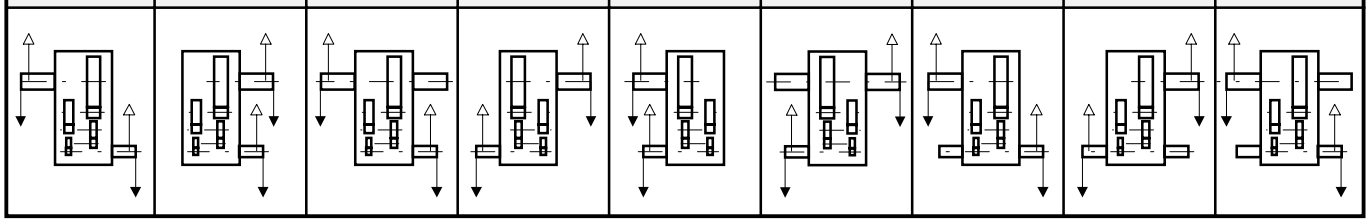

Nomenclature

P H D [ ] P 4 - [ ] [ ] - [ ]

Size: 9060, 9070, 9075, 9080, 9085

Shaft Arrangement: RL, RR, RB, LR, LL, LB, BL, BR, BB

Low Speed Shaft Type:
(blank) : Solid Shaft
T : Hollow shaft (Shrink Disk type)
K : Hollow shaft (Key type)

Nominal Reduction Ratio

Size	80	90	100	112	125	140	160	180	200	224	250	280	315	355	400	450	500
9060	O	O	O	O	O	O	O	O	O	O	O	O	O	O	O		
9070	O	O	O	O	O	O	O	O	O	O	O	O	O	O	O		
9075			O	O	O	O	O	O	O	O	O	O	O	O	O	O	O
9080	O	O	O	O	O	O	O	O	O	O	O	O	O	O	O		
9085			O	O	O	O	O	O	O	O	O	O	O	O	O	O	O

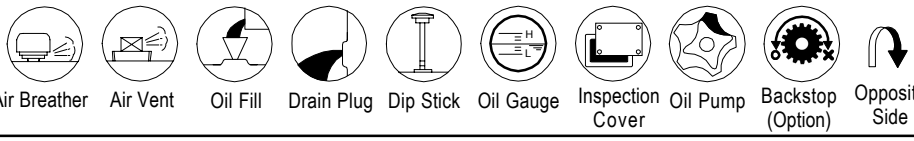

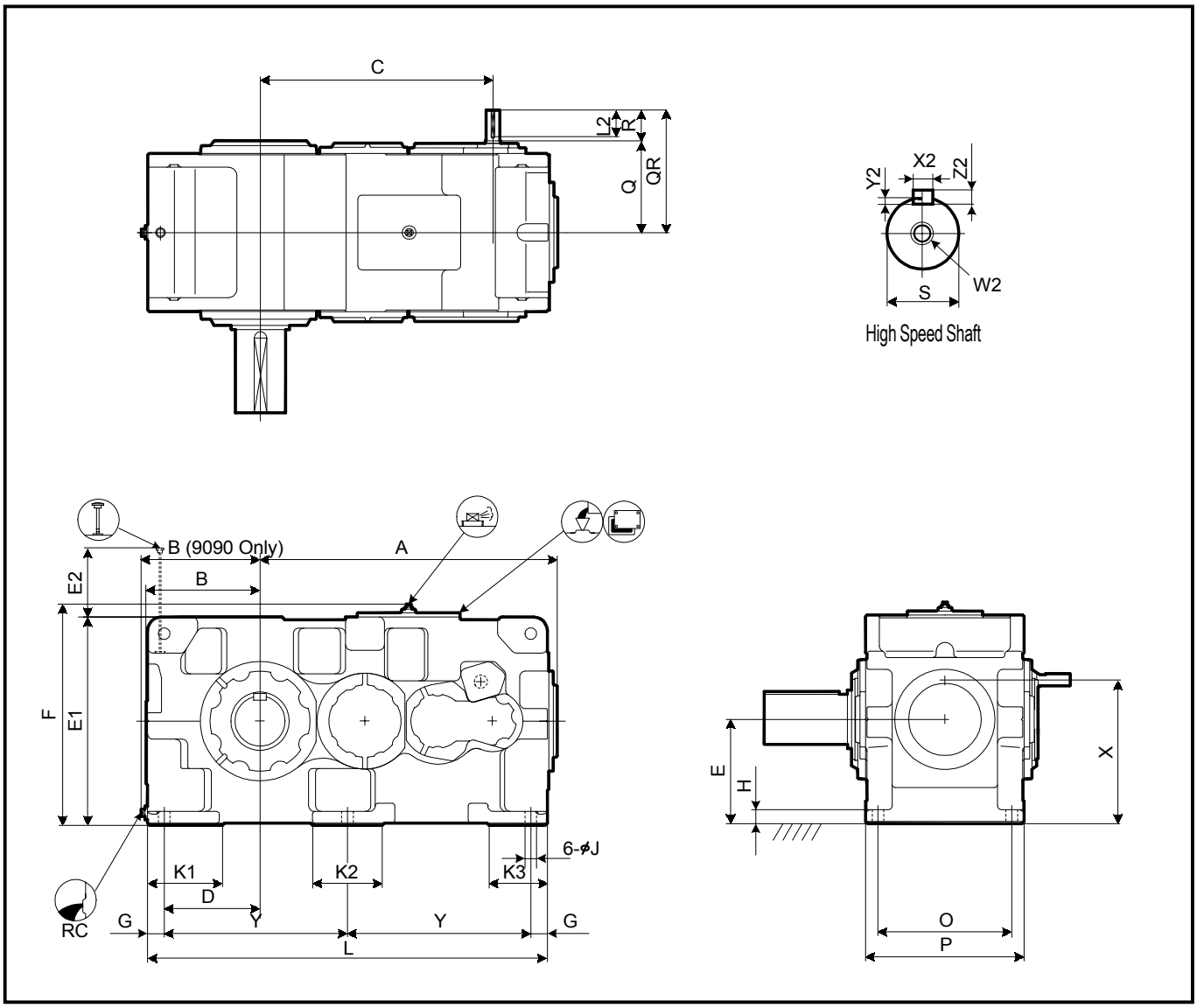

Size	A	B	C	D	E	E1	E2	F	G	H	J	K1	K2	K3	L	O	P	X	Y
9090	1070	428	795	345	375	750	194	797	60	50	42	270	250	210	1440	480	570	517	660
9095	1100	440	825	375	400	800	199	847	60	50	42	290	250	210	1500	480	570	542	690
9100	1204	450	901	375	425	850	208	897	70	55	48	300	280	240	1610	560	650	587	735
9105	1238	485	935	410	450	900	213	947	70	55	48	320	280	240	1680	560	650	612	770
9110	1354	500	1001	420	475	950	218	997	75	60	56	340	310	260	1810	610	710	637	830
9115	1403	550	1050	470	500	1000	217	1047	75	60	56	350	310	260	1910	610	710	662	880

Size	High Speed Shaft									RC	Wt.	Oil Qty.
	Q	QR	R	S	W2/Depth	Key						
						X2	Y2	Z2	L2		kg	L
9090	330	440	110	50k6	M16/36	14	5.5	9	95	1 1/2"	2150	150
9095	330	440	110	50k6	M16/36	14	5.5	9	95	1 1/2"	2400	180
9100	375	515	140	60m6	M20/42	18	7	11	125	1 1/2"	2830	220
9105	375	515	140	60m6	M20/42	18	7	11	125	1 1/2"	3390	260
9110	405	545	140	60m6	M20/42	18	7	11	125	1 1/2"	4060	300
9115	405	545	140	60m6	M20/42	18	7	11	125	1 1/2"	4510	365

Units:mm

1.Key and keyways are based on ISO R773-1969 Close keys(JIS B1301-1996 Parallel key in fastening type)
2.The oil quantity is approximate.Oil shall be supplied within the range shown on the oil gauge.
3. Refer to the page D - 16 for dimensions not shown in these drawings.
4. Refer to the page D - 30 for the dimension of optional parts.

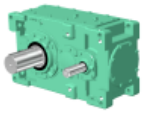

Slow Speed Shaft

Solid Shaft	Hollow Shaft (Shrink Disk Type)
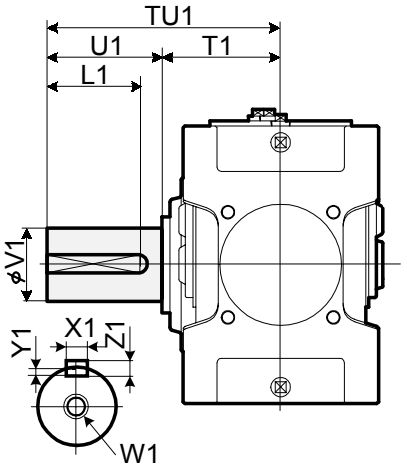	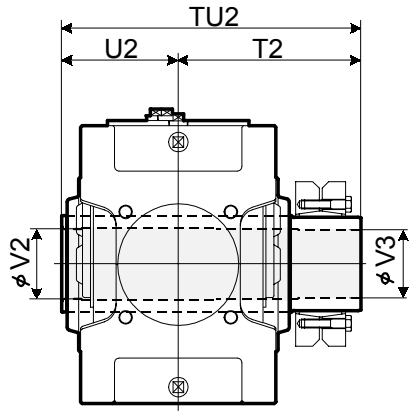 Refer to the page D - 18 for details.

Size	Solid Shaft									Hollow Shaft (Shrink Disk Type)				
	TU1	T1	U1	V1	W1/Depth	Key				TU2	T2	U2	V2	V3
						X1	Y1	Z1	L1					
9090	650	350	300	180m6	M30/60	45	15	25	270	844	494	350	193	190
9095	700	350	350	190m6	M30/60	45	15	25	320	859	509	350	203	200
9100	740	390	350	200m6	M30/60	45	15	25	320	934	544	390	213	210
9105	740	390	350	220m6	M30/60	50	17	28	320	949	559	390	223	220
9110	770	420	350	220m6	M30/60	50	17	28	320	1030	610	420	243	240
9115	830	420	410	240m6	M30/60	56	20	32	375	1065	645	420	253	250

Units:mm

Standard Shaft Arrangement Configuration

RL	RR	RB	LR	LL	LB	BL	BR	BB
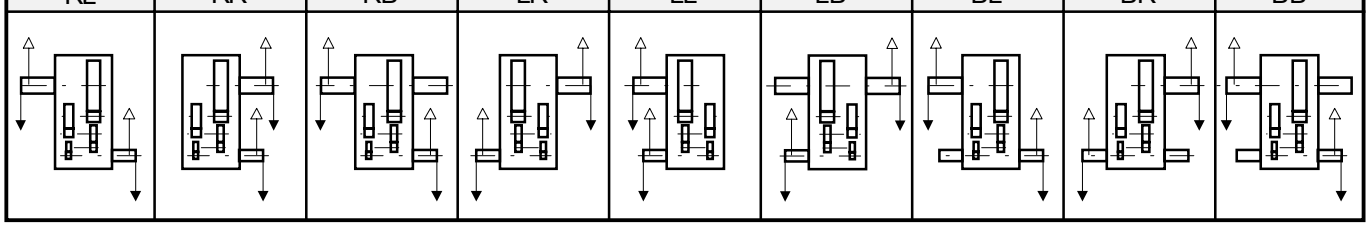								

Nomenclature

P H D [Size] P 4 - [Shaft Arrangement] [Low Speed Shaft Type] - [Nominal Reduction Ratio]

Size: 9090, 9095, 9100, 9105, 9110, 9115

Shaft Arrangement: RL, RR, RB, LR, LL, LB, BL, BR, BB

Low Speed Shaft Type:
(blank) : Solid Shaft
T : Hollow shaft (Shrink Disk type)

Size	Nominal Reduction Ratio														
	90	100	112	125	140	160	180	200	224	250	280	315	355	400	450
9090	O	O	O	O	O	O	O	O	O	O	O	O	O	O	
9095		O	O	O	O	O	O	O	O	O	O	O	O	O	O
9100	O	O	O	O	O	O	O	O	O	O	O	O	O	O	
9105		O	O	O	O	O	O	O	O	O	O	O	O	O	O
9110	O	O	O	O	O	O	O	O	O	O	O	O	O	O	
9115		O	O	O	O	O	O	O	O	O	O	O	O	O	O

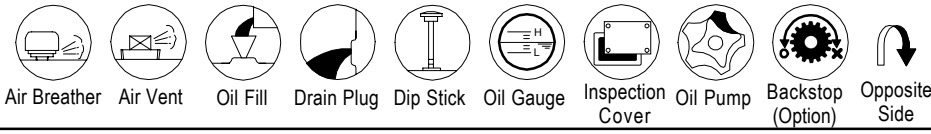

Air Breather, Air Vent, Oil Fill, Drain Plug, Dip Stick, Oil Gauge, Inspection Cover, Oil Pump, Backstop (Option), Opposite Side

Sumitomo Heavy Industries, Ltd.
http://www.shi.co.jp/ptc

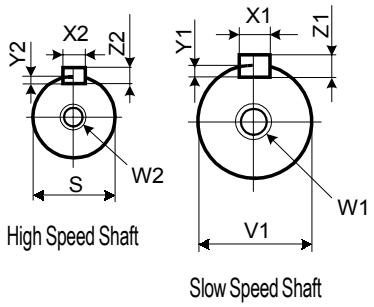

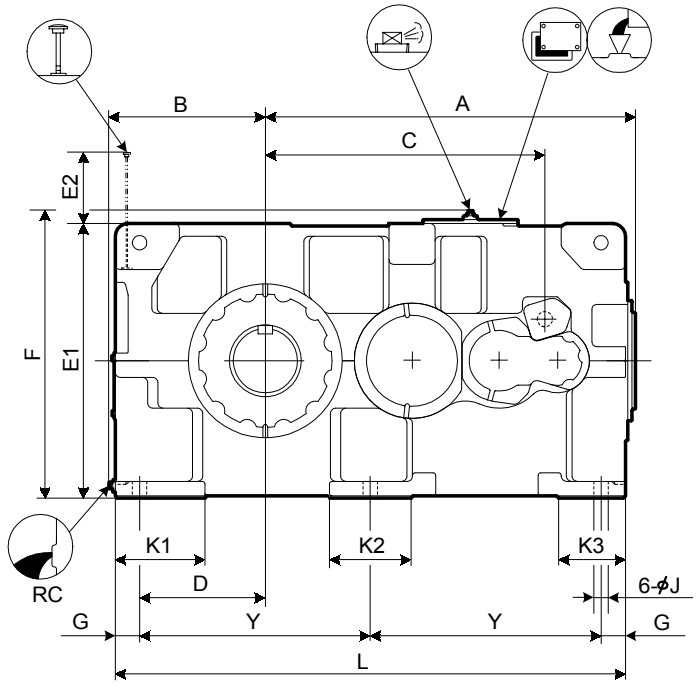

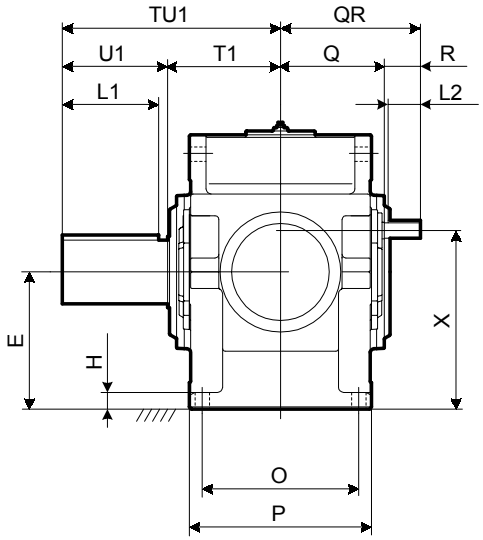

Size	A	B	C	D	E	E1	E2	F	G	H	J	K1	K2	K3	L	O	P	X	Y
9118	1444	608	1091	490	535	1070	278	1117	95	65	56	350	320	260	1990	610	710	697	900
9121	1585	663	1290	545	580	1160	277	1207	95	70	56	390	300	270	2180	680	780	777	995
9126	1585	663	1290	545	580	1160	277	1207	95	70	56	390	300	270	2180	680	780	777	995

Size	High Speed Shaft									RC	Wt.	Oil Qty.
	Q	QR	R	S	W2/Depth	Key						
						X2	Y2	Z2	L2		kg	L
9118	405	545	140	60m6	M20/42	18	7	11	125	1 1/2"	5050	390
9121	440	580	140	65m6	M20/42	18	7	11	125	1 1/2"	6100	530
9126	440	580	140	65m6	M20/42	18	7	11	125	1 1/2"	6350	520

Size	Slow Speed Shaft (Solid)								
	TU1	T1	U1	V1	W1/Depth	Key			
						X1	Y1	Z1	L1
9118	850	440	410	260m6	M36/70	56	20	32	375
9121	935	465	470	280m6	M36/70	63	20	32	425
9126	935	465	470	300m6	M36/70	70	22	36	425

Units:mm

1.Key and keyways are based on ISO R773-1969 Close keys(JIS B1301-1996 Parallel key in fastening type)
2.The oil quantity is approximate.Oil shall be supplied within the range shown on the oil gauge.
3. Consult us for dimensions not shown in these drawings.

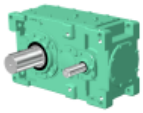

Standard Shaft Arrangement Configuration

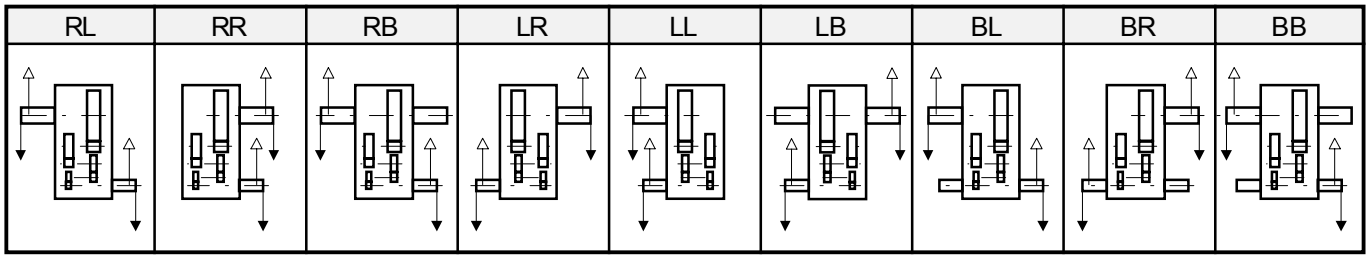

Nomenclature

P H D [ ] P 4 - [ ] - [ ]

Size: 9118, 9121, 9126

Shaft Arrangement: RL, RR, RB, LR, LL, LB, BL, BR, BB

Nominal Reduction Ratio

Size	Nominal Reduction Ratio													
	100	112	125	140	160	180	200	224	250	280	315	355	400	450
9118	O	O	O	O	O	O	O	O	O	O	O	O	O	O
9121	O	O	O	O	O	O	O	O	O	O	O	O	O	
9126	O	O	O	O	O	O	O	O	O	O	O	O	O	

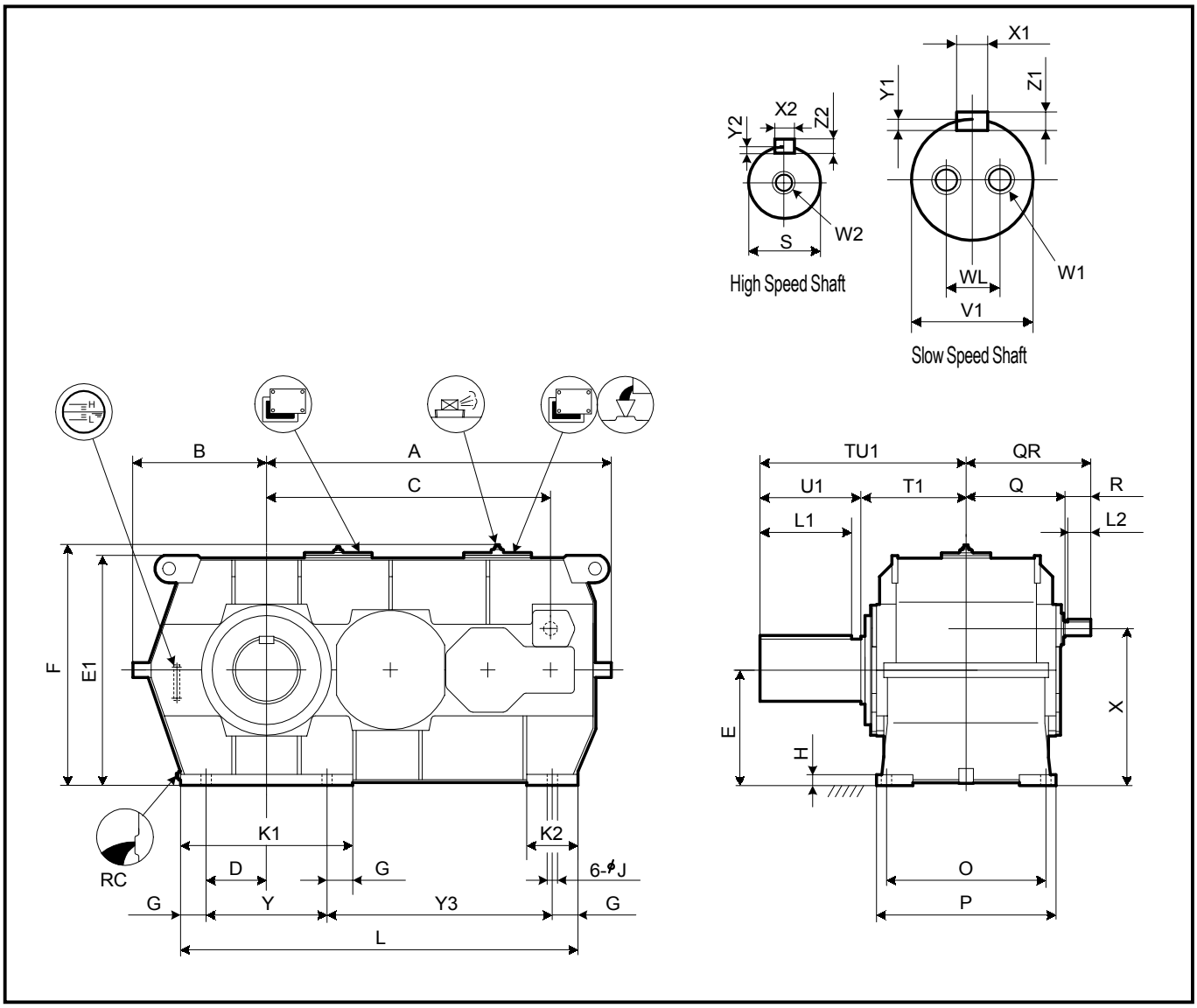

Size	A	B	C	D	E	E1	F	G	H	J	K1	K2	L	O	P	X	Y	Y3
9128	1720	680	1413	330	600	1194	1241	140	55	66	940	280	1990	710	840	797	660	1050
9131	1882	730	1550	330	630	1256	1303	140	60	66	940	280	2170	850	980	856	660	1230
9136	1882	730	1550	330	630	1256	1303	140	60	66	940	280	2170	850	980	856	660	1230

Size	High Speed Shaft									RC	Wt.	Oil Qty.
	Q	QR	R	S	W2/Depth	Key						
						X2	Y2	Z2	L2		kg	L
9128	465	605	140	75m6	M20/42	20	7.5	12	125	1 1/2"	7400	450
9131	540	680	140	75m6	M20/42	20	7.5	12	125	1 1/2"	9600	650
9136	540	680	140	75m6	M20/42	20	7.5	12	125	1 1/2"	10000	640

Size	Slow Speed Shaft (Solid)									
	TU1	T1	U1	V1	W1/Depth	WL	Key			
							X1	Y1	Z1	L1
9128	950	480	470	320m6	M36/70	200	70	22	36	425
9131	1100	550	550	340m6	M36/70	215	80	25	40	500
9136	1110	560	550	360m6	M36/70	230	80	25	40	500

Units:mm

1.Key and keyways are based on ISO R773-1969 Close keys(JIS B1301-1996 Parallel key in fastening type)
2.The oil quantity is approximate.Oil shall be supplied within the range shown on the oil gauge.
3.Consult us for dimensions not shown in these drawings.

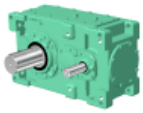

Standard Shaft Arrangement Configuration

RL	RR	RB	LR	LL	LB	BL	BR	BB

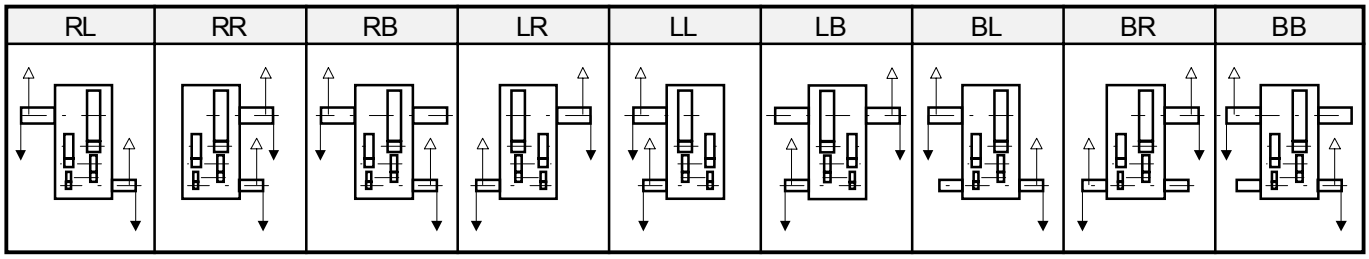

Nomenclature

P H D [Size] P 4 A - [Shaft Arrangement] - [Nominal Reduction Ratio]

Size: 9128, 9131, 9136

Shaft Arrangement: RL, RR, RB, LR, LL, LB, BL, BR, BB

Size	Nominal Reduction Ratio														
	80	90	100	112	125	140	160	180	200	224	250	280	315	355	400
9128			O	O	O	O	O	O	O	O	O	O	O	O	O
9131	O	O	O	O	O	O	O	O	O	O	O	O	O		
9136	O	O	O	O	O	O	O	O	O	O	O	O	O		

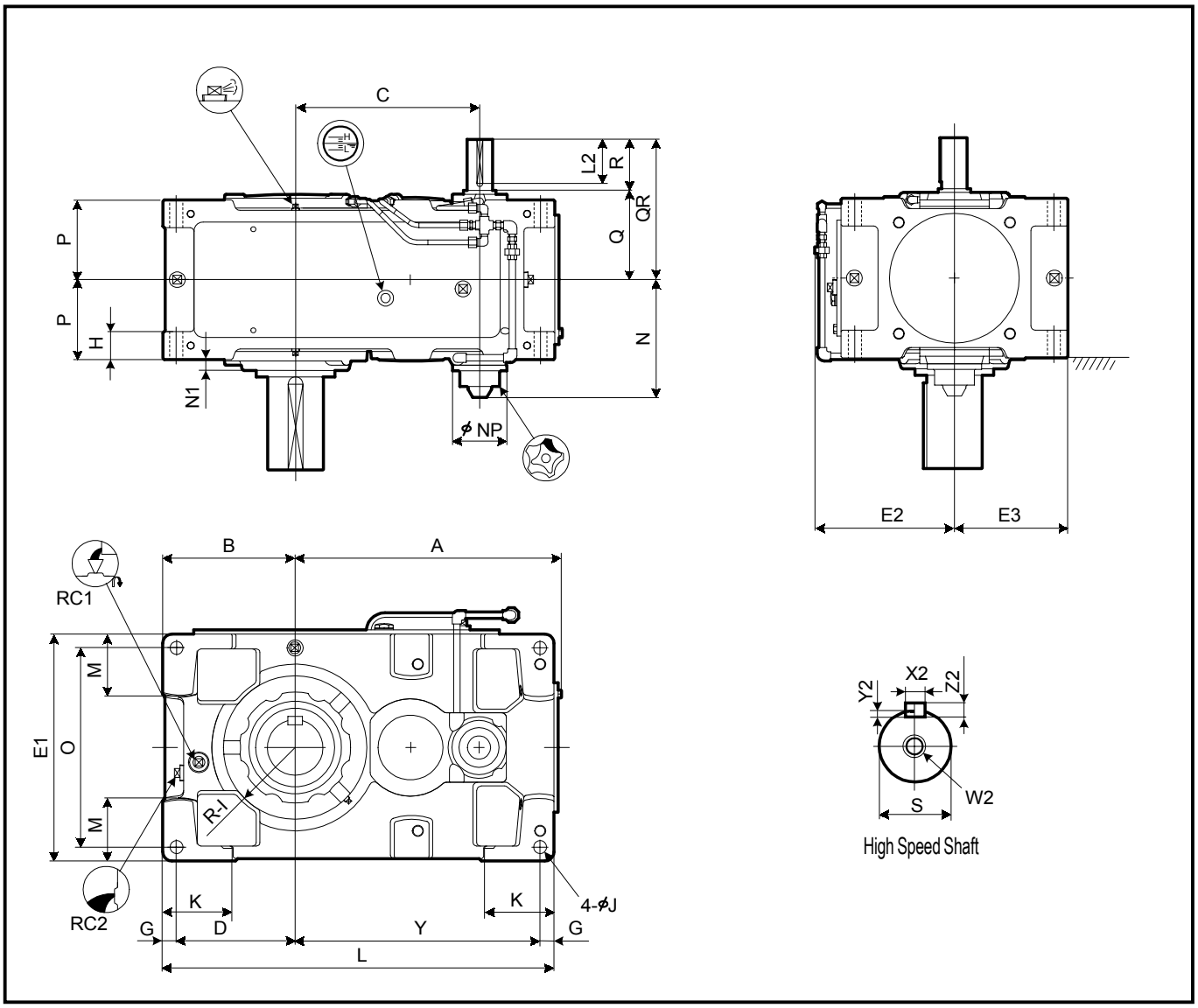

Size	A	B	C	D	E1	E2	E3	G	H	I	J	K	L	M	N	N1	NP	O	P	Y
9015	295	160	194	140	270	195	135	20	35	80	15	95	440	70	183	25	100	230	102.5	260
9025	346	175	227	155	310	215	155	20	40	87.5	19	110	505	75	195	23	100	270	117.5	310
9030	406	200	264	175	320	220	160	25	50	105	24	120	590	85	208	22	100	270	132.5	365
9035	437	219	295	194	370	245	185	25	50	120	24	120	640	100	208	22	100	320	132.5	396
9040	467	235	306	205	400	260	200	30	60	120	28	150	685	100	235	15	117	340	157.5	420
9050	537	255	358	225	420	270	210	30	60	140	28	150	775	110	255	23	117	360	172.5	490
9055	576	286	397	256	490	305	245	30	60	155	28	150	845	135	255	23	117	430	172.5	529

Size	High Speed Shaft									RC1	RC2	Wt.	Oil Qty.
	Q	QR	R	S	W2/Depth	Key							
						X2	Y2	Z2	L2			kg	L
9015	131	211	80	30k6	M10/22	8	4	7	70	3/4"	3/4"	100	5
9025	146	225	80	35k6	M12/28	10	5	8	70	3/4"	3/4"	140	7
9030	159	269	110	40k6	M16/36	12	5	8	95	3/4"	3/4"	195	9
9035	159	269	110	40k6	M16/36	12	5	8	95	3/4"	3/4"	215	12
9040	174	284	110	50k6	M16/36	14	5.5	9	95	1"	1"	285	18
9050	193	303	110	55m6	M20/42	16	6	10	95	1"	1"	415	22
9055	193	303	110	55m6	M20/42	16	6	10	95	1"	1"	475	31

Units:mm

1.Key and keyways are based on ISO R773-1969 Close keys(JIS B1301-1996 Parallel key in fastening type)
2.The oil quantity is approximate.Oil shall be supplied within the range shown on the oil gauge.
3. Refer to the page D - 12 for dimensions not shown in these drawings.
4. Refer to the page D - 25 for the dimension of optional parts.

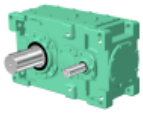

Slow Speed Shaft

Solid Shaft	Hollow Shaft (Shrink Disk Type)	Hollow Shaft (KeyType)
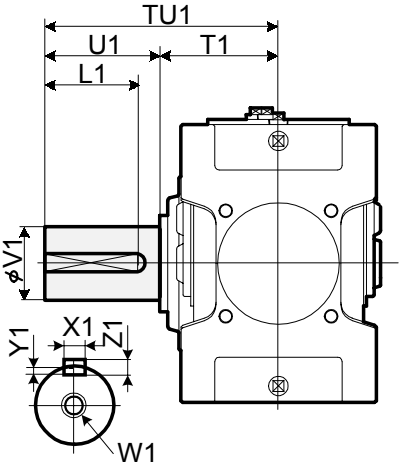	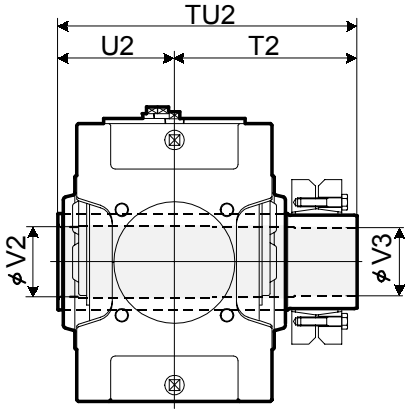 Refer to the page D - 18 for details.	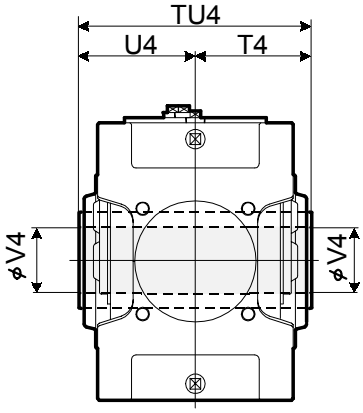 Refer to the page D - 19 for details.

Size	Solid Shaft									Hollow Shaft (Shrink Disk Type)					Hollow Shaft (Key Type)			
	TU1	T1	U1	V1	W1/Depth	Key				TU2	T2	U2	V2	V3	TU4	T4	U4	V4
						X1	Y1	Z1	L1									
9015	245	135	110	58m6	M20/42	18	7	11	95	328	193	135	63	60	270	135	135	55
9025	285	145	140	70m6	M20/42	20	7.5	12	125	358	213	145	73	70	300	150	150	65
9030	330	160	170	80m6	M20/42	22	9	14	150	393	233	160	83	80	330	165	165	75
9035	330	160	170	90m6	M20/42	25	9	14	150	403	243	160	88	85	330	165	165	85
9040	349	179	170	95m6	M24/50	25	9	14	150	448	268	180	98	95	360	180	180	90
9050	411	201	210	110m6	M24/50	28	10	16	190	503	303	200	108	105	410	205	205	105
9055	411	201	210	120m6	M24/50	32	11	18	185	528	323	205	123	120	410	205	205	115

Units:mm

Standard Shaft Arrangement Configuration

RL	RR
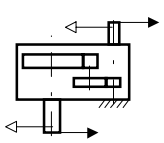	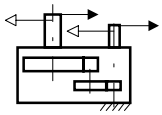

Nomenclature

P V A [ ] P 2 - [ ] [ ] - [ ]

Size: 9015, 9025, 9030, 9035, 9040, 9050, 9055

Shaft Arrangement: RL, RR

Low Speed Shaft Type:
(blank) : Solid Shaft
T : Hollow shaft (Shrink Disk type)
K : Hollow shaft (Key type)

Nominal Reduction Ratio

Size	Nominal Reduction Ratio											
	6.3	7.1	8	9	10	11.2	12.5	14	16	18	20	22.4
9015	O	O	O	O	O	O	O	O	O	O		
9025	O	O	O	O	O	O	O	O	O	O		
9030	O	O	O	O	O	O	O	O	O	O		
9035			O	O	O	O	O	O	O	O	O	O
9040	O	O	O	O	O	O	O	O	O	O		
9050	O	O	O	O	O	O	O	O	O	O		
9055			O	O	O	O	O	O	O	O	O	O

Air Breather | Air Vent | Oil Fill | Drain Plug | Dip Stick | Oil Gauge | Inspection Cover | Oil Pump | Backstop (Option) | Opposite Side

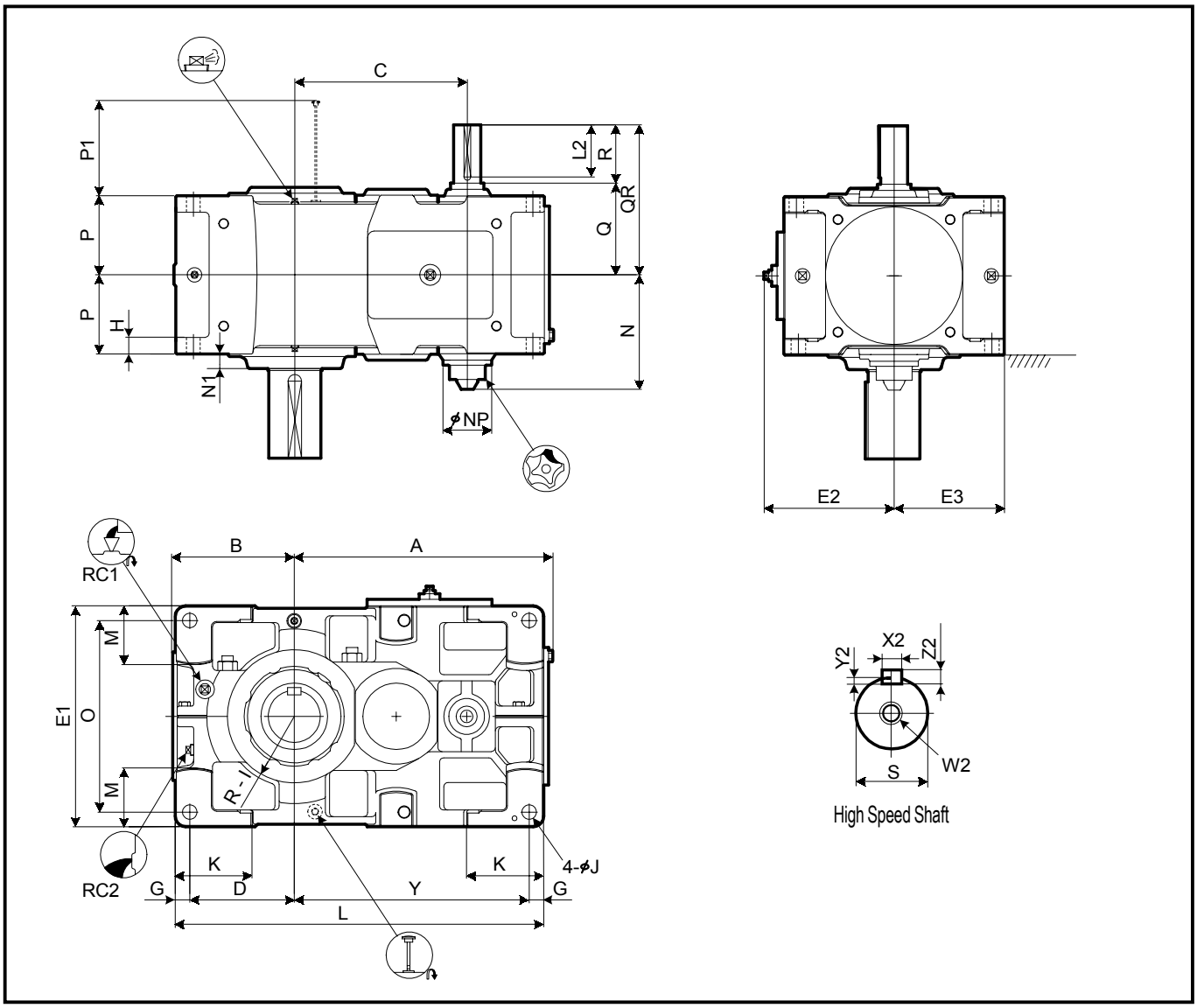

Size	A	B	C	D	E1	E2	E3	G	H	I	J	K	L	M	N	N1	NP	O	P	P1	Y
9060	621	291	414	251	530	313	265	35	35	160	35	180	885	140	275	35	117	460	190	223	564
9070	719	328	482	283	600	348	300	40	40	175	42	215	1020	155	300	38	117	520	215	253	657
9075	772	375	535	330	670	383	335	40	52	190	42	220	1120	195	300	40	117	590	215	253	710
9080	812	370	556	325	670	383	335	40	52	190	42	220	1155	170	320	45	117	590	230	283	750
9085	868	414	612	369	750	423	375	40	52	215	42	220	1255	210	320	40	117	670	230	283	806

Size	High Speed Shaft									RC1	RC2	Wt.	Oil Qty.
	Q	QR	R	S	W2/Depth	Key							
						X2	Y2	Z2	L2			kg	L
9060	220	360	140	65m6	M20/42	18	7	11	125	1"	1"	610	25
9070	245	385	140	75m6	M20/42	20	7.5	12	125	1"	1"	860	39
9075	245	385	140	75m6	M20/42	20	7.5	12	125	1"	1"	1110	49
9080	264	434	170	85m6	M20/42	22	9	14	150	1"	1"	1240	54
9085	264	434	170	85m6	M20/42	22	9	14	150	1"	1"	1500	71

Units:mm

1.Key and keyways are based on ISO R773-1969 Close keys(JIS B1301-1996 Parallel key in fastening type)
2.The oil quantity is approximate.Oil shall be supplied within the range shown on the oil gauge.
3. Refer to the page D - 14 for dimensions not shown in these drawings.
4. Refer to the page D - 28 for the dimension of optional parts.

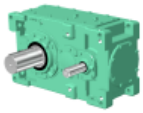

Slow Speed Shaft

Solid Shaft	Hollow Shaft (Shrink Disk Type)	Hollow Shaft (KeyType)
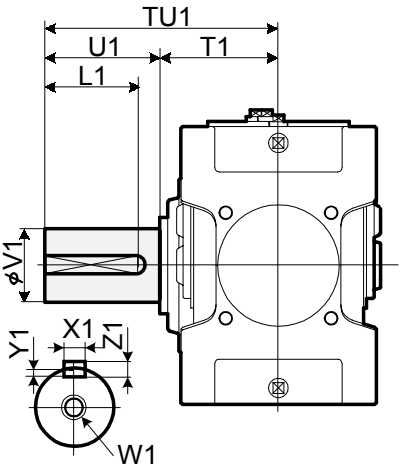	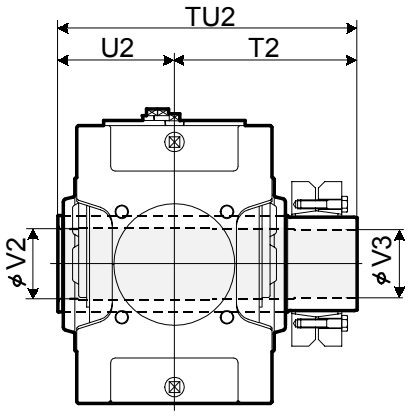 Refer to the page D - 18 for details.	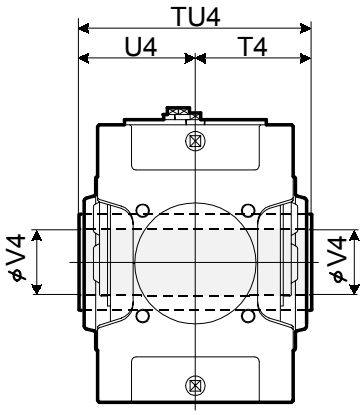 Refer to the page D - 19 for details.

Size	Solid Shaft									Hollow Shaft (Shrink Disk Type)					Hollow Shaft (Key Type)			
	TU1	T1	U1	V1	W1/Depth	Key				TU2	T2	U2	V2	V3	TU4	T4	U4	V4
						X1	Y1	Z1	L1									
9060	440	230	210	125m6	M24/50	32	11	18	185	583	353	230	128	125	470	235	235	125
9070	509	259	250	145m6	M30/60	36	12	20	225	644	384	260	148	145	530	265	265	145
9075	562	262	300	160m6	M30/60	40	13	22	275	651	386	265	158	155	530	265	265	150
9080	582	282	300	165m6	M30/60	40	13	22	275	714	429	285	173	170	570	285	285	165
9085	585	285	300	175m6	M30/60	45	15	25	270	714	429	285	183	180	570	285	285	175

Units:mm

Standard Shaft Arrangement Configuration

RL	RR
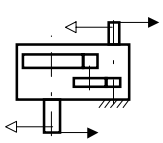	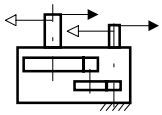

Nomenclature

P V D [Size] P 2 - [Shaft Arrangement] [Low Speed Shaft Type] - [Nominal Reduction Ratio]

Size: 9060, 9070, 9075, 9080, 9085

Shaft Arrangement: RL, RR

Low Speed Shaft Type:
- (blank) : Solid Shaft
- T : Hollow shaft (Shrink Disk type)
- K : Hollow shaft (Key type)

Size	Nominal Reduction Ratio											
	6.3	7.1	8	9	10	11.2	12.5	14	16	18	20	22.4
9060	O	O	O	O	O	O	O	O	O	O		
9070	O	O	O	O	O	O	O	O	O	O		
9075			O	O	O	O	O	O	O	O	O	O
9080	O	O	O	O	O	O	O	O	O	O		
9085			O	O	O	O	O	O	O	O	O	O

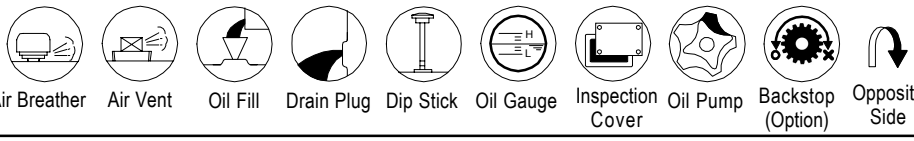

Air Breather | Air Vent | Oil Fill | Drain Plug | Dip Stick | Oil Gauge | Inspection Cover | Oil Pump | Backstop (Option) | Opposite Side

Sumitomo Heavy Industries, Ltd.
http://www.shi.co.jp/ptc

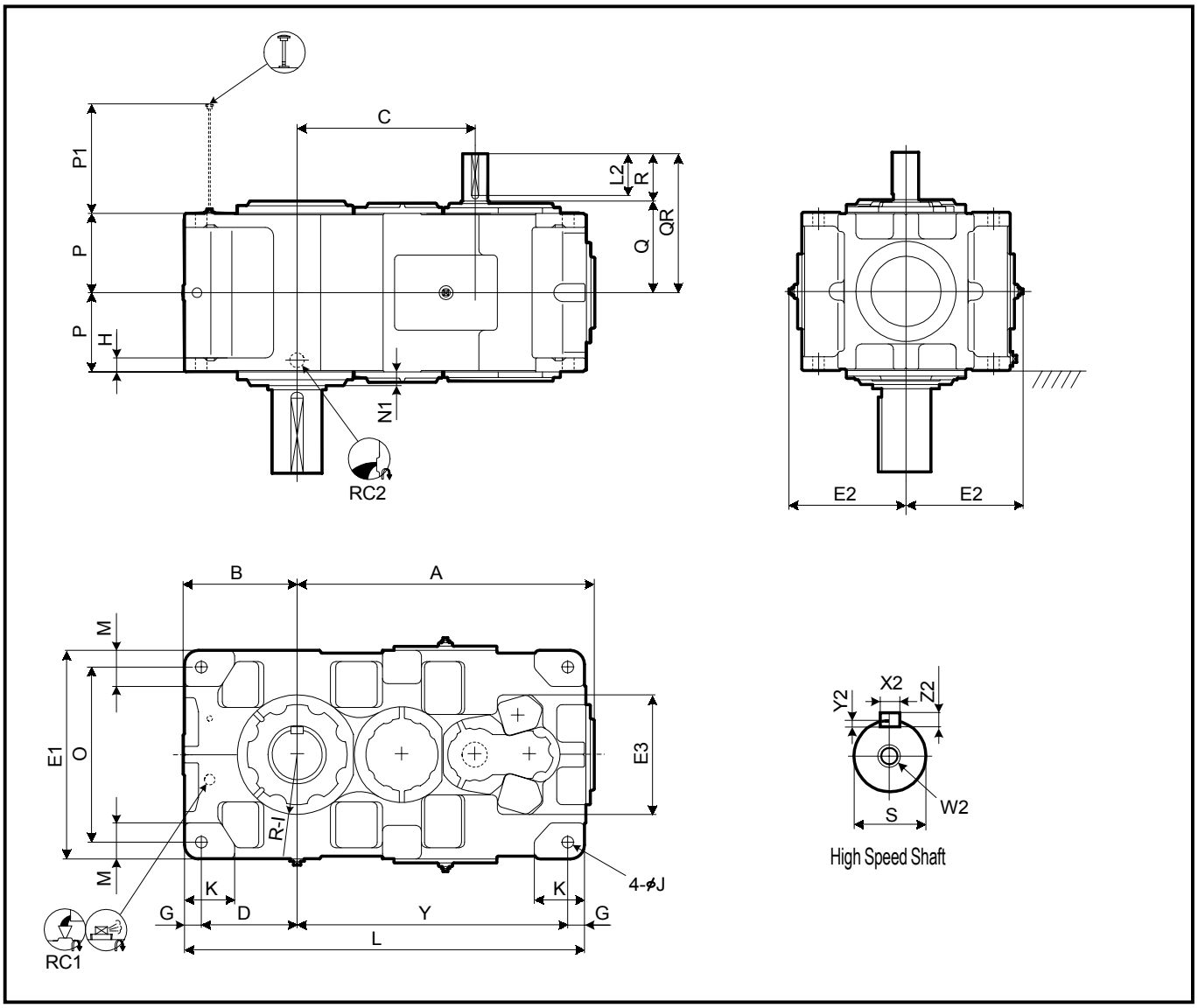

Size	A	B	C	D	E1	E2	E3	G	H	I	J	K	L	M	N1	O	P	P1	Y
9090	1070	410	640	345	750	421	430	60	50	215	42	180	1440	130	50	630	285	394	975
9095	1100	440	670	375	800	446	430	60	50	235	42	200	1500	140	50	680	285	394	1005
9100	1204	450	724	375	850	471	500	70	55	235	48	200	1610	150	60	710	325	443	1095
9105	1238	485	758	410	900	496	500	70	55	260	48	220	1680	160	60	760	325	443	1130
9110	1354	500	824	420	950	521	500	75	60	265	56	220	1810	170	55	800	355	475	1240
9115	1403	550	873	470	1000	546	500	75	60	280	56	250	1910	180	55	850	355	475	1290

Size	High Speed Shaft									RC1	RC2	Wt. kg	Oil Qty. L
	Q	QR	R	S	W2/Depth	Key							
						X2	Y2	Z2	L2				
9090	330	500	170	90m6	M24/50	25	9	14	150	1"	1 1/2"	2070	90
9095	330	500	170	90m6	M24/50	25	9	14	150	1"	1 1/2"	2330	120
9100	375	585	210	100m6	M24/50	28	10	16	190	1"	1 1/2"	2820	140
9105	375	585	210	100m6	M24/50	28	10	16	190	1"	1 1/2"	3300	175
9110	405	615	210	110m6	M24/50	28	10	16	190	1"	1 1/2"	3950	200
9115	405	615	210	110m6	M24/50	28	10	16	190	1"	1 1/2"	4470	255

Units:mm

1.Key and keyways are based on ISO R773-1969 Close keys(JIS B1301-1996 Parallel key in fastening type)
2.The oil quantity is approximate.Oil shall be supplied within the range shown on the oil gauge.
3. Refer to the page D - 16 for dimensions not shown in these drawings.
4. Refer to the page D - 31 for the dimension of optional parts.

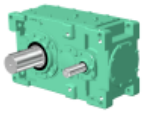

Slow Speed Shaft

Solid Shaft	Hollow Shaft (Shrink Disk Type)
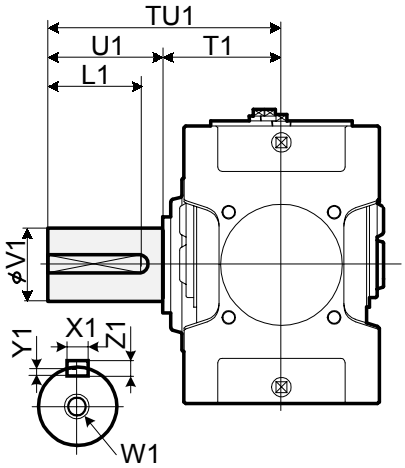	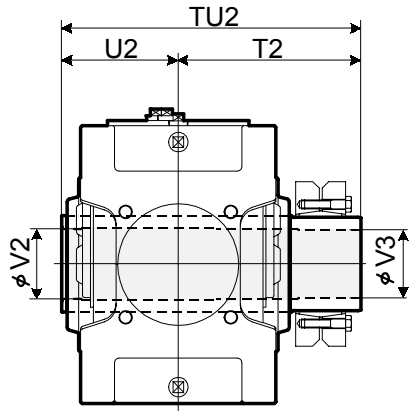 Refer to the page D - 18 for details

SIZE	Solid Shaft									Hollow Shaft (Shrink Disk Type)				
	TU1	T1	U1	V1	W1/Depth	Key				TU2	T2	U2	V2	V3
						X1	Y1	Z1	L1					
9090	650	350	300	180m6	M30/60	45	15	25	270	844	494	350	193	190
9095	700	350	350	190m6	M30/60	45	15	25	320	859	509	350	203	200
9100	740	390	350	200m6	M30/60	45	15	25	320	934	544	390	213	210
9105	740	390	350	220m6	M30/60	50	17	28	320	949	559	390	223	220
9110	770	420	350	220m6	M30/60	50	17	28	320	1030	610	420	243	240
9115	830	420	410	240m6	M30/60	56	20	32	375	1065	645	420	253	250

Units:mm

Standard Shaft Arrangement Configuration

RL	RR
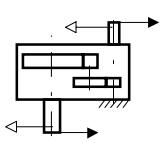	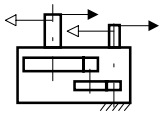

Nomenclature

P V D [Size] P 2 - [Shaft Arrangement] [Low Speed Shaft Type] - [Nominal Reduction Ratio]

Size: 9090, 9095, 9100, 9105, 9110, 9115

Shaft Arrangement: RL, RR

Low Speed Shaft Type:
(blank) : Solid Shaft
T : Hollow shaft (Shrink Disk type)

Size	Nominal Reduction Ratio										
	6.3	7.1	8	9	10	11.2	12.5	14	16	18	20
9090	O	O	O	O	O	O	O	O	O	O	
9095		O	O	O	O	O	O	O	O	O	O
9100	O	O	O	O	O	O	O	O	O	O	
9105		O	O	O	O	O	O	O	O	O	O
9110	O	O	O	O	O	O	O	O	O	O	
9115		O	O	O	O	O	O	O	O	O	O

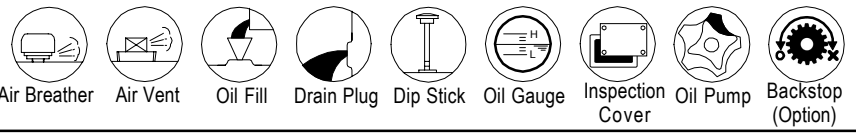

Air Breather | Air Vent | Oil Fill | Drain Plug | Dip Stick | Oil Gauge | Inspection Cover | Oil Pump | Backstop (Option) | Opposite Side

Sumitomo Heavy Industries, Ltd.
http://www.shi.co.jp/ptc

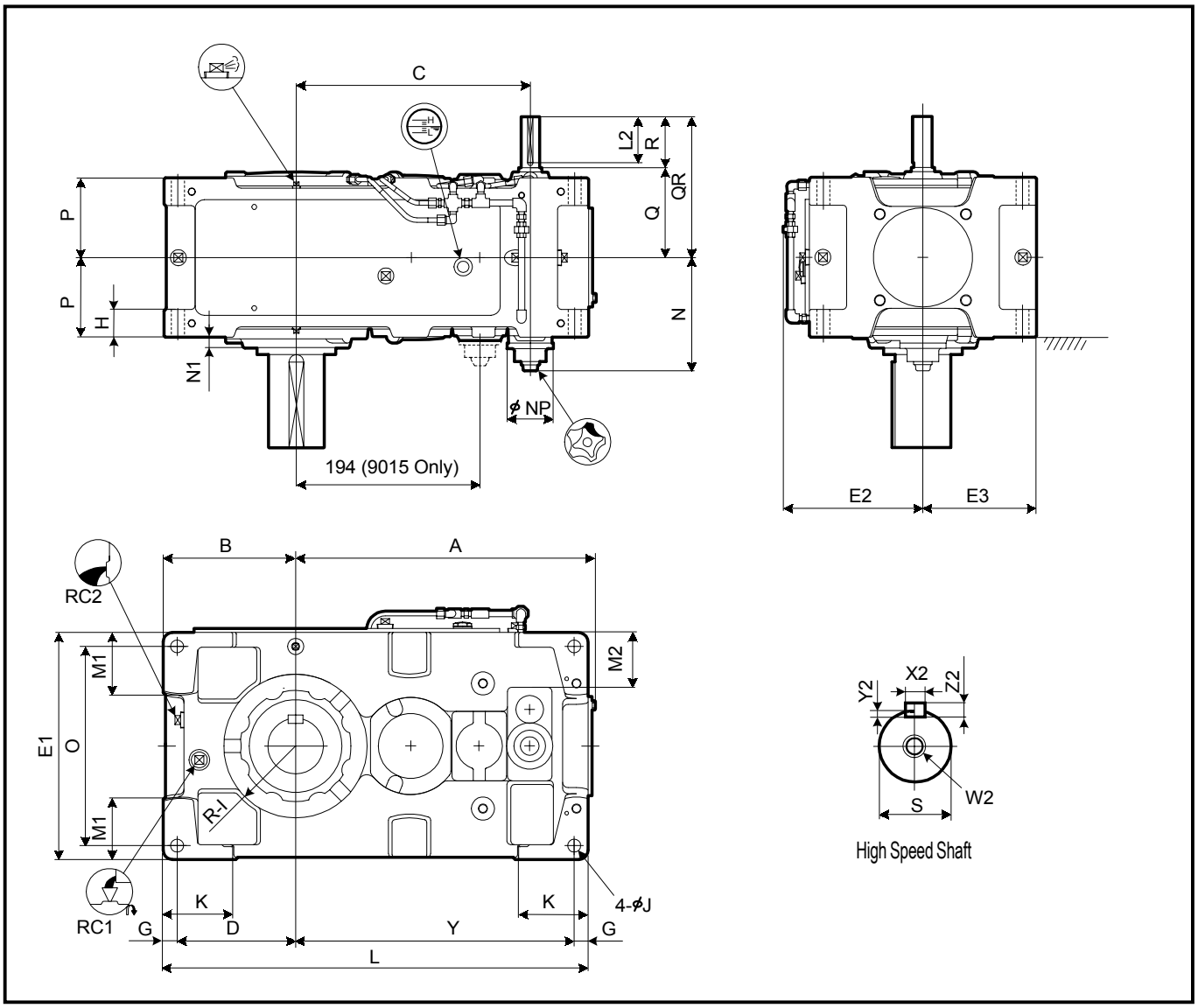

Size	A	B	C	D	E1	E2	E3	G	H	I	J	K	L	M1	M2	N	N1	NP	O	P	Y
9015	338	160	257	140	270	195	135	20	35	80	15	95	485	70	80	183	25	100	230	102.5	305
9025	408	175	306	155	310	215	155	20	40	87.5	19	110	570	75	90	195	23	100	270	117.5	375
9030	453	200	343	175	320	220	160	25	50	105	24	120	640	85	50	208	22	100	270	132.5	415
9035	489	219	374	194	370	245	185	25	50	120	24	120	690	100	75	208	22	100	320	132.5	446
9040	540	235	398	205	400	260	200	30	60	120	28	150	759	100	70	225	15	100	340	157.5	494
9050	609	255	467	225	420	270	210	30	60	140	28	150	848	110	83	245	23	100	360	172.5	563
9055	648	286	506	256	490	305	245	30	60	155	28	150	918	135	118	245	23	100	430	172.5	602

Size	High Speed Shaft									RC1	RC2	Wt.	Oil Qty.
	Q	QR	R	S	W2/Depth	Key							
						X2	Y2	Z2	L2			kg	L
9015	130	190	60	25k6	M10/22	8	4	7	50	3/4"	3/4"	105	6
9025	144	204	60	28k6	M10/22	8	4	7	50	3/4"	3/4"	150	8
9030	161	241	80	30k6	M10/22	8	4	7	70	3/4"	3/4"	205	10
9035	161	241	80	30k6	M10/22	8	4	7	70	3/4"	3/4"	225	14
9040	176	256	80	35k6	M12/28	10	5	8	70	1"	1"	305	18
9050	194	304	110	40k6	M16/36	12	5	8	95	1"	1"	445	25
9055	194	304	110	40k6	M16/36	12	5	8	95	1"	1"	505	35

Units:mm

1.Key and keyways are based on ISO R773-1969 Close keys(JIS B1301-1996 Parallel key in fastening type)
2.The oil quantity is approximate.Oil shall be supplied within the range shown on the oil gauge.
3. Refer to the page D - 13 for dimensions not shown in these drawings.
4. Refer to the page D - 25 for the dimension of optional parts.

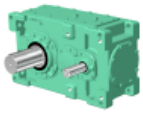

Slow Speed Shaft

Solid Shaft	Hollow Shaft (Shrink Disk Type)	Hollow Shaft (KeyType)
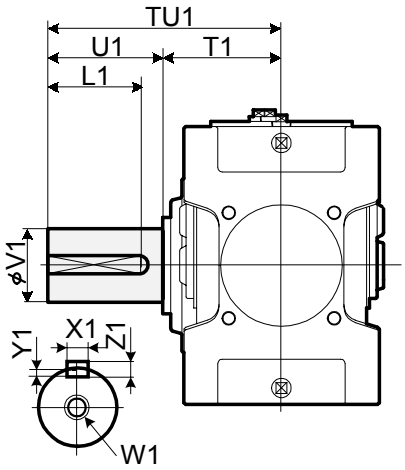	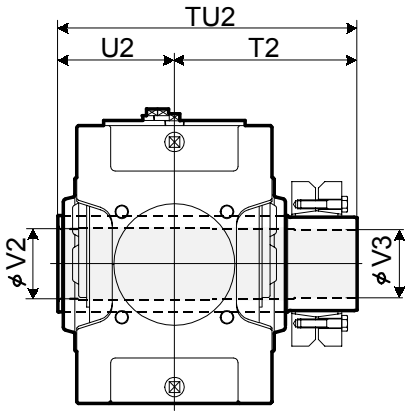 Refer to the page D - 18 for details.	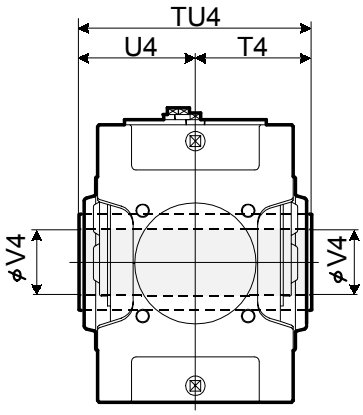 Refer to the page D - 19 for details.

Size	Solid Shaft									Hollow Shaft (Shrink Disk Type)					Hollow Shaft (Key Type)			
	TU1	T1	U1	V1	W1/Depth	Key				TU2	T2	U2	V2	V3	TU4	T4	U4	V4
						X1	Y1	Z1	L1									
9015	245	135	110	58m6	M20/42	18	7	11	95	328	193	135	63	60	270	135	135	55
9025	285	145	140	70m6	M20/42	20	7.5	12	125	358	213	145	73	70	300	150	150	65
9030	330	160	170	80m6	M20/42	22	9	14	150	393	233	160	83	80	330	165	165	75
9035	330	160	170	90m6	M20/42	25	9	14	150	403	243	160	88	85	330	165	165	85
9040	349	179	170	95m6	M24/50	25	9	14	150	448	268	180	98	95	360	180	180	90
9050	411	201	210	110m6	M24/50	28	10	16	190	503	303	200	108	105	410	205	205	105
9055	411	201	210	120m6	M24/50	32	11	18	185	528	323	205	123	120	410	205	205	115

Units:mm

Standard Shaft Arrangement Configuration

RL	RR
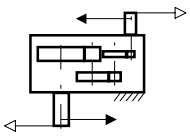	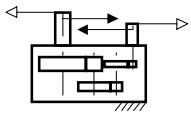

Nomenclature

P V A [Size] P 3 - [Shaft Arrangement] [Low Speed Shaft Type] - [Nominal Reduction Ratio]

Size: 9015, 9025, 9030, 9035, 9040, 9050, 9055

Shaft Arrangement: RL, RR

Low Speed Shaft Type:
(blank) : Solid Shaft
T : Hollow shaft (Shrink Disk type)
K : Hollow shaft (Key type)

Size	Nominal Reduction Ratio													
	20	22.4	25	28	31.5	35.5	40	45	50	56	63	71	80	90
9015	O	O	O	O	O	O	O	O						
9025	O	O	O	O	O	O	O	O						
9030	O	O	O	O	O	O	O	O	O	O	O	O		
9035			O	O	O	O	O	O	O	O	O	O	O	O
9040	O	O	O	O	O	O	O	O	O	O	O	O		
9050	O	O	O	O	O	O	O	O	O	O	O	O		
9055			O	O	O	O	O	O	O	O	O	O	O	O

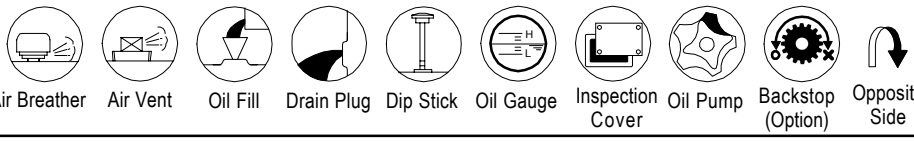

Air Breather | Air Vent | Oil Fill | Drain Plug | Dip Stick | Oil Gauge | Inspection Cover | Oil Pump | Backstop (Option) | Opposite Side

Sumitomo Heavy Industries, Ltd.
http://www.shi.co.jp/ptc

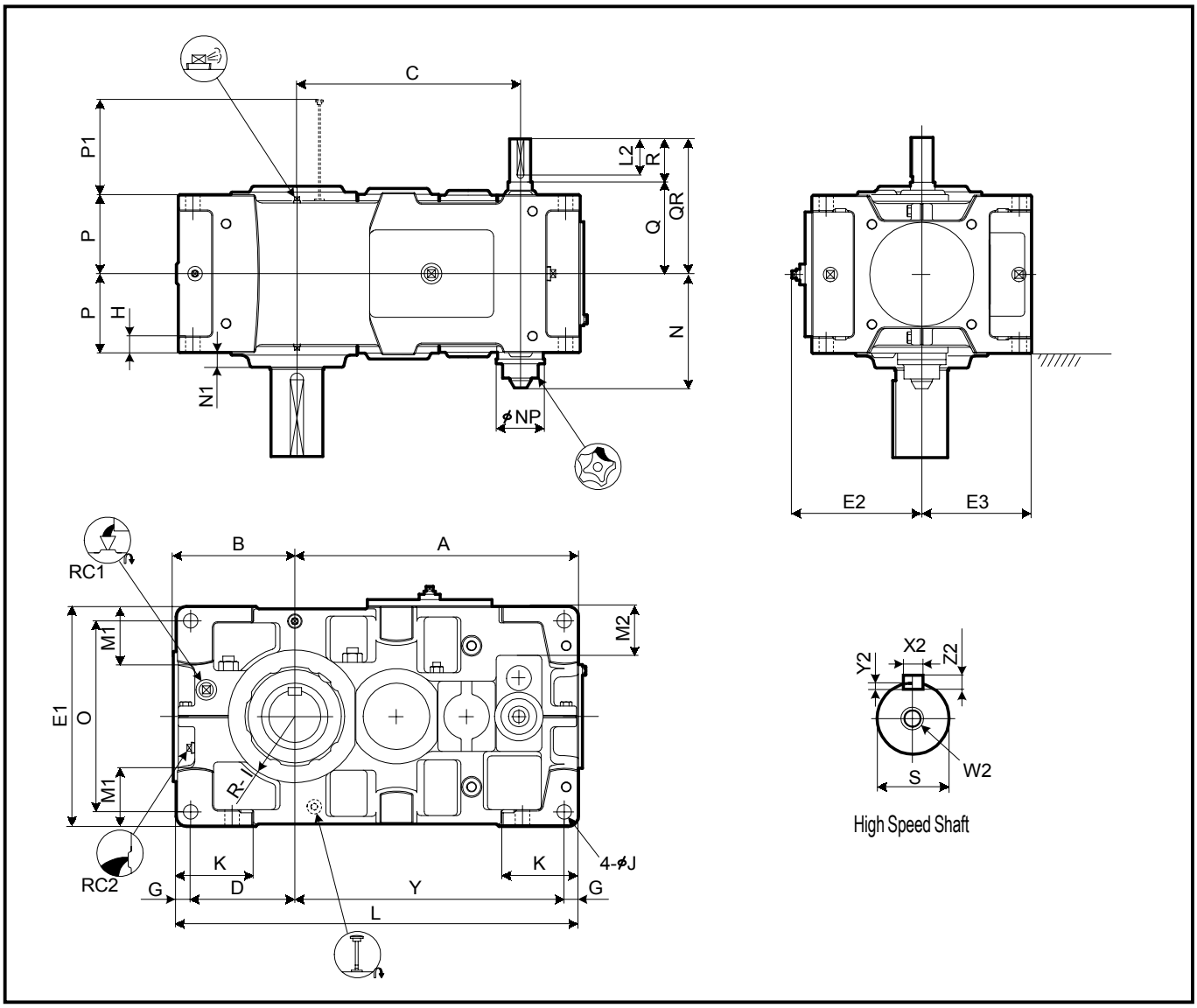

Size	A	B	C	D	E1	E2	E3	G	H	I	J	K	L	M1	M2	N	N1	NP	O	P	P1	Y
9060	701	291	540	251	530	313	265	35	35	160	35	180	970	140	118	275	35	117	460	190	223	649
9070	809	328	630	283	600	348	300	40	40	175	42	215	1115	155	128	300	38	117	520	215	253	752
9075	862	375	683	330	670	383	335	40	52	190	42	220	1215	195	163	300	40	117	590	215	253	805
9080	932	370	725	325	670	383	335	40	52	190	42	220	1275	170	140	320	45	117	590	230	283	870
9085	988	414	781	369	750	423	375	40	52	215	42	220	1375	210	180	320	40	117	670	230	283	926

Size	High Speed Shaft									RC1	RC2	Wt. kg	Oil Qty. L
	Q	QR	R	S	W2/Depth	Key							
						X2	Y2	Z2	L2				
9060	219	329	110	50k6	M16/36	14	5.5	9	95	1"	1"	660	28
9070	244	354	110	55m6	M20/42	16	6	10	95	1"	1"	940	44
9075	244	354	110	55m6	M20/42	16	6	10	95	1"	1"	1160	56
9080	265	405	140	65m6	M20/42	18	7	11	125	1"	1"	1350	57
9085	265	405	140	65m6	M20/42	18	7	11	125	1"	1"	1610	79

Units:mm

1.Key and keyways are based on ISO R773-1969 Close keys(JIS B1301-1996 Parallel key in fastening type)
2.The oil quantity is approximate.Oil shall be supplied within the range shown on the oil gauge.
3. Refer to the page D - 15 for dimensions not shown in these drawings.
4. Refer to the page D - 28 for the dimension of optional parts.

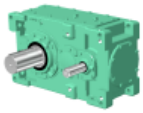

Slow Speed Shaft

Solid Shaft	Hollow Shaft (Shrink Disk Type)	Hollow Shaft (KeyType)
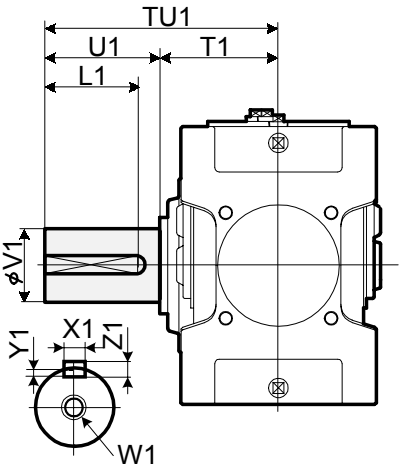	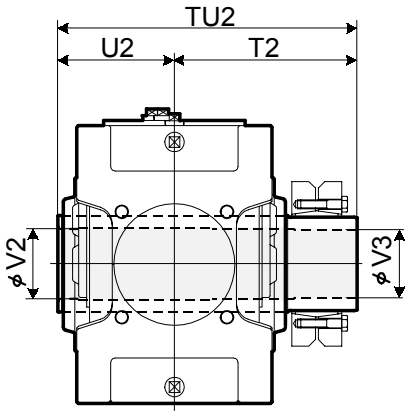 Refer to the page D - 18 for details.	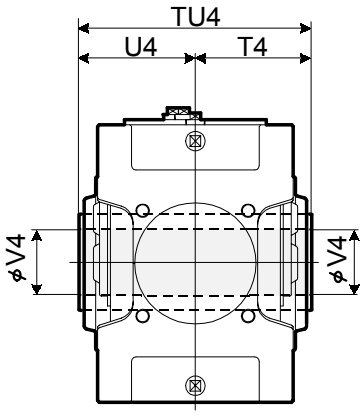 Refer to the page D - 19 for details.

Size	Solid Shaft									Hollow Shaft (Shrink Disk Type)					Hollow Shaft (Key Type)			
	TU1	T1	U1	V1	W1/Depth	Key				TU2	T2	U2	V2	V3	TU4	T4	U4	V4
						X1	Y1	Z1	L1									
9060	440	230	210	125m6	M24/50	32	11	18	185	583	353	230	128	125	470	235	235	125
9070	509	259	250	145m6	M30/60	36	12	20	225	644	384	260	148	145	530	265	265	145
9075	562	262	300	160m6	M30/60	40	13	22	275	651	386	265	158	155	530	265	265	150
9080	582	282	300	165m6	M30/60	40	13	22	275	714	429	285	173	170	570	285	285	165
9085	585	285	300	175m6	M30/60	45	15	25	270	714	429	285	183	180	570	285	285	175

Units:mm

Standard Shaft Arrangement Configuration

RL	RR
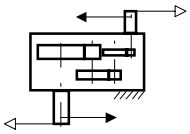	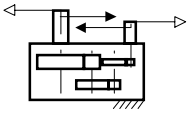

Nomenclature

P V D [ ] P 3 - [ ] [ ] - [ ]

Size: 9060, 9070, 9075, 9080, 9085

Shaft Arrangement: RL, RR

Low Speed Shaft Type:
- (blank) : Solid Shaft
- T : Hollow shaft (Shrink Disk type)
- K : Hollow shaft (Key type)

Nominal Reduction Ratio

Size	Nominal Reduction Ratio													
	20	22.4	25	28	31.5	35.5	40	45	50	56	63	71	80	90
9060	O	O	O	O	O	O	O	O	O	O	O	O		
9070	O	O	O	O	O	O	O	O	O	O	O	O		
9075			O	O	O	O	O	O	O	O	O	O	O	O
9080	O	O	O	O	O	O	O	O	O	O	O	O		
9085			O	O	O	O	O	O	O	O	O	O	O	O

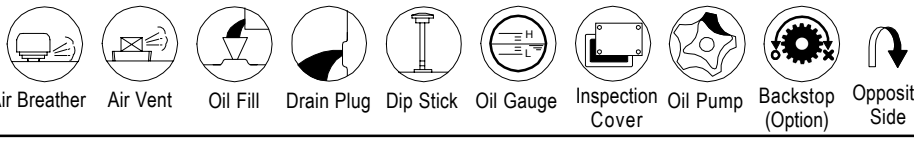

Air Breather, Air Vent, Oil Fill, Drain Plug, Dip Stick, Oil Gauge, Inspection Cover, Oil Pump, Backstop (Option), Opposite Side

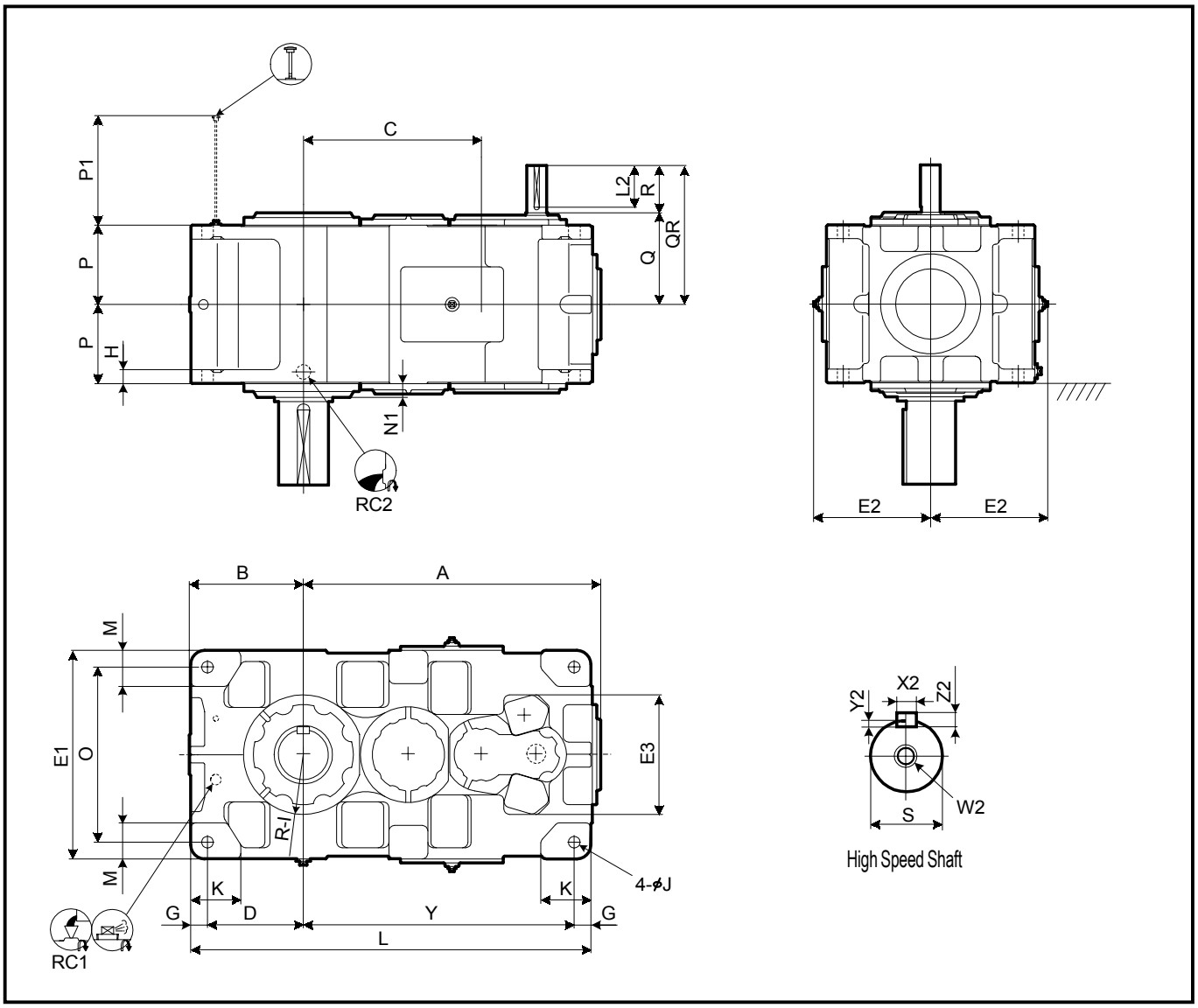

Size	A	B	C	D	E1	E2	E3	G	H	I	J	K	L	M	N1	O	P	P1	Y
9090	1070	410	837	345	750	421	430	60	50	215	42	180	1440	130	50	630	285	394	975
9095	1100	440	867	375	800	446	430	60	50	235	42	200	1500	140	50	680	285	394	1005
9100	1204	450	950	375	850	471	500	70	55	235	48	200	1610	150	60	710	325	443	1095
9105	1238	485	984	410	900	496	500	70	55	260	48	220	1680	160	60	760	325	443	1130
9110	1354	500	1050	420	950	521	500	75	60	265	56	220	1810	170	55	800	355	475	1240
9115	1403	550	1099	470	1000	546	500	75	60	280	56	250	1910	180	55	850	355	475	1290

Size	High Speed Shaft									RC1	RC2	Wt. kg	Oil Qty. L
	Q	QR	R	S	W2/Depth	Key							
						X2	Y2	Z2	L2				
9090	330	470	140	65m6	M20/42	18	7	11	125	1"	1 1/2"	2120	90
9095	330	470	140	65m6	M20/42	18	7	11	125	1"	1 1/2"	2380	120
9100	375	515	140	75m6	M20/42	20	7.5	12	125	1"	1 1/2"	2870	140
9105	375	515	140	75m6	M20/42	20	7.5	12	125	1"	1 1/2"	3350	175
9110	405	575	170	80m6	M20/42	22	9	14	150	1"	1 1/2"	4000	200
9115	405	575	170	80m6	M20/42	22	9	14	150	1"	1 1/2"	4520	255

Units:mm

1.Key and keyways are based on ISO R773-1969 Close keys(JIS B1301-1996 Parallel key in fastening type)
2.The oil quantity is approximate.Oil shall be supplied within the range shown on the oil gauge.
3. Refer to the page D - 16 for dimensions not shown in these drawings.
4. Refer to the page D - 31 for the dimension of optional parts.

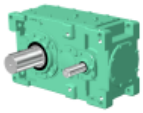

Slow Speed Shaft

Solid Shaft	Hollow Shaft (Shrink Disk Type)
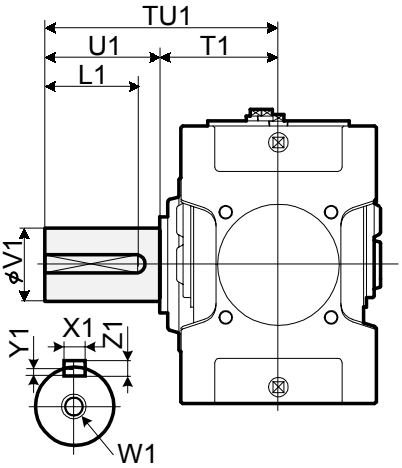	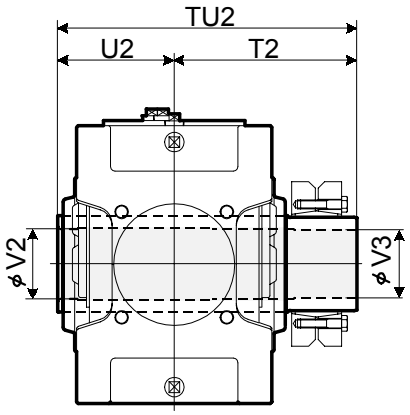 Refer to the page D - 18 for details

Size	Solid Shaft									Hollow Shaft (Shrink Disk Type)				
	TU1	T1	U1	V1	W1/Depth	Key				TU2	T2	U2	V2	V3
						X1	Y1	Z1	L1					
9090	650	350	300	180m6	M30/60	45	15	25	270	844	494	350	193	190
9095	700	350	350	190m6	M30/60	45	15	25	320	859	509	350	203	200
9100	740	390	350	200m6	M30/60	45	15	25	320	934	544	390	213	210
9105	740	390	350	220m6	M30/60	50	17	28	320	949	559	390	223	220
9110	770	420	350	220m6	M30/60	50	17	28	320	1030	610	420	243	240
9115	830	420	410	240m6	M30/60	56	20	32	375	1065	645	420	253	250

Units:mm

Standard Shaft Arrangement Configuration

RL	RR
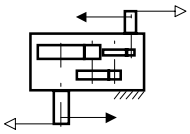	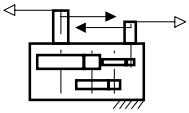

Nomenclature

P V D [ ] P 3 - [ ] [ ] - [ ]

Size: 9090, 9095, 9100, 9105, 9110, 9115

Shaft Arrangement: RL, RR

Low Speed Shaft Type: (blank) : Solid Shaft; T : Hollow shaft (Shrink Disk type)

Nominal Reduction Ratio

Size	Nominal Reduction Ratio													
	20	22.4	25	28	31.5	35.5	40	45	50	56	63	71	80	90
9090	O	O	O	O	O	O	O	O	O	O	O	O	O	
9095		O	O	O	O	O	O	O	O	O	O	O	O	O
9100	O	O	O	O	O	O	O	O	O	O	O	O	O	
9105		O	O	O	O	O	O	O	O	O	O	O	O	O
9110	O	O	O	O	O	O	O	O	O	O	O	O	O	
9115		O	O	O	O	O	O	O	O	O	O	O	O	O

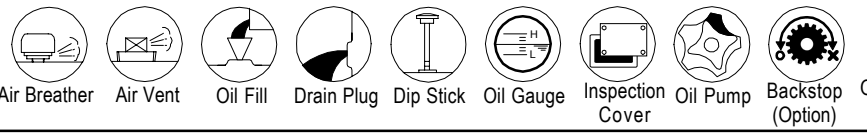

Air Breather, Air Vent, Oil Fill, Drain Plug, Dip Stick, Oil Gauge, Inspection Cover, Oil Pump, Backstop (Option), Opposite Side

Sumitomo Heavy Industries, Ltd.
http://www.shi.co.jp/ptc

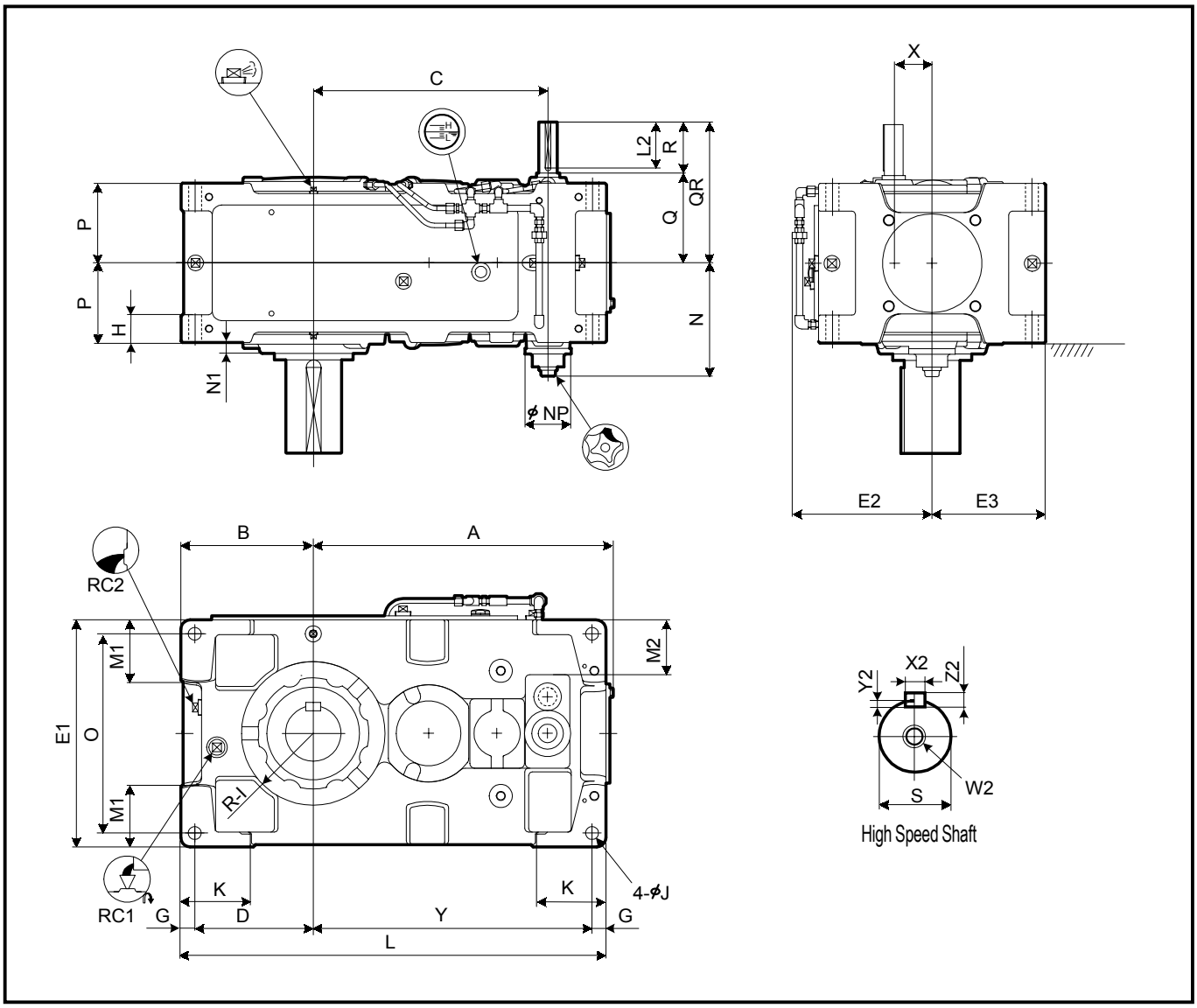

Size	A	B	C	D	E1	E2	E3	G	H	I	J	K	L	M1	M2	N	N1	NP	O	P	X	Y
9030	453	200	343	175	320	220	160	25	50	105	24	120	640	85	50	208	22	100	270	132.5	63	415
9035	484	219	374	194	370	245	185	25	50	120	24	120	690	100	75	208	22	100	320	132.5	63	446
9040	540	235	398	205	400	260	200	30	60	120	28	150	759	100	70	225	15	100	340	157.5	79	494
9050	609	255	467	225	420	270	210	30	60	140	28	150	848	110	83	245	23	100	360	172.5	79	563
9055	648	286	506	256	490	305	245	30	60	155	28	150	918	135	118	245	23	100	430	172.5	79	602

Size	High Speed Shaft									RC1	RC2	Wt.	Oil Qty.
	Q	QR	R	S	W2/Depth	Key							
						X2	Y2	Z2	L2			kg	L
9030	159	219	60	25k6	M10/22	8	4	7	50	3/4"	3/4"	210	10
9035	159	219	60	25k6	M10/22	8	4	7	50	3/4"	3/4"	230	14
9040	175	235	60	28k6	M10/22	8	4	7	50	1"	1"	310	17
9050	195	275	80	30k6	M10/22	8	4	7	70	1"	1"	450	23
9055	195	275	80	30k6	M10/22	8	4	7	70	1"	1"	510	33

Units:mm

1.Key and keyways are based on ISO R773-1969 Close keys(JIS B1301-1996 Parallel key in fastening type)
2.The oil quantity is approximate.Oil shall be supplied within the range shown on the oil gauge.
3. Refer to the page D - 13 for dimensions not shown in these drawings.
4. Refer to the page D - 25 for the dimension of optional parts.

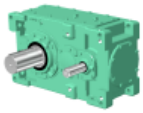

Slow Speed Shaft

Solid Shaft	Hollow Shaft (Shrink Disk Type)	Hollow Shaft (KeyType)
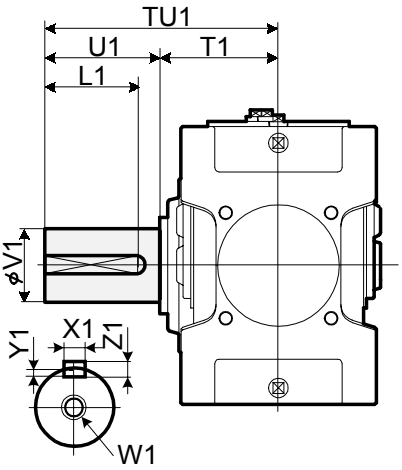	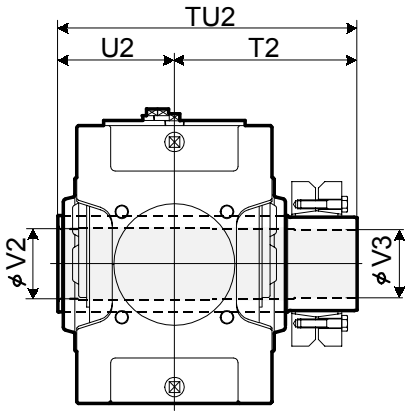 Refer to the page D - 18 for details.	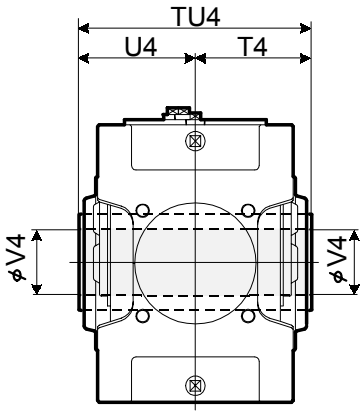 Refer to the page D - 19 for details.

Size	Solid Shaft									Hollow Shaft (Shrink Disk Type)					Hollow Shaft (Key Type)			
	TU1	T1	U1	V1	W1/Depth	Key				TU2	T2	U2	V2	V3	TU4	T4	U4	V4
						X1	Y1	Z1	L1									
9030	330	160	170	80m6	M20/42	22	9	14	150	393	233	160	83	80	330	165	165	75
9035	330	160	170	90m6	M20/42	25	9	14	150	403	243	160	88	85	330	165	165	85
9040	349	179	170	95m6	M24/50	25	9	14	150	448	268	180	98	95	360	180	180	90
9050	411	201	210	110m6	M24/50	28	10	16	190	503	303	200	108	105	410	205	205	105
9055	411	201	210	120m6	M24/50	32	11	18	185	528	323	205	123	120	410	205	205	115

Units:mm

Standard Shaft Arrangement Configuration

RL	RR
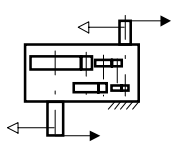	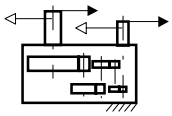

Nomenclature

P V A [ ] P 4 - [ ] [ ] - [ ]

Size: 9030, 9035, 9040, 9050, 9055

Shaft Arrangement: RL, RR

Low Speed Shaft Type:
(blank) : Solid Shaft
T : Hollow shaft (Shrink Disk type)
K : Hollow shaft (Key type)

Nominal Reduction Ratio

Size	80	90	100	112	125	140	160	180	200	224	250	280	315	355	400	450	500
9030	O	O	O	O	O	O	O	O	O	O							
9035			O	O	O	O	O	O	O	O	O	O					
9040	O	O	O	O	O	O	O	O	O	O							
9050	O	O	O	O	O	O	O	O	O	O	O	O	O	O	O		
9055			O	O	O	O	O	O	O	O	O	O	O	O	O	O	O

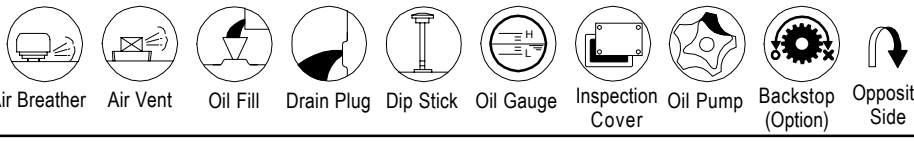

Air Breather, Air Vent, Oil Fill, Drain Plug, Dip Stick, Oil Gauge, Inspection Cover, Oil Pump, Backstop (Option), Opposite Side

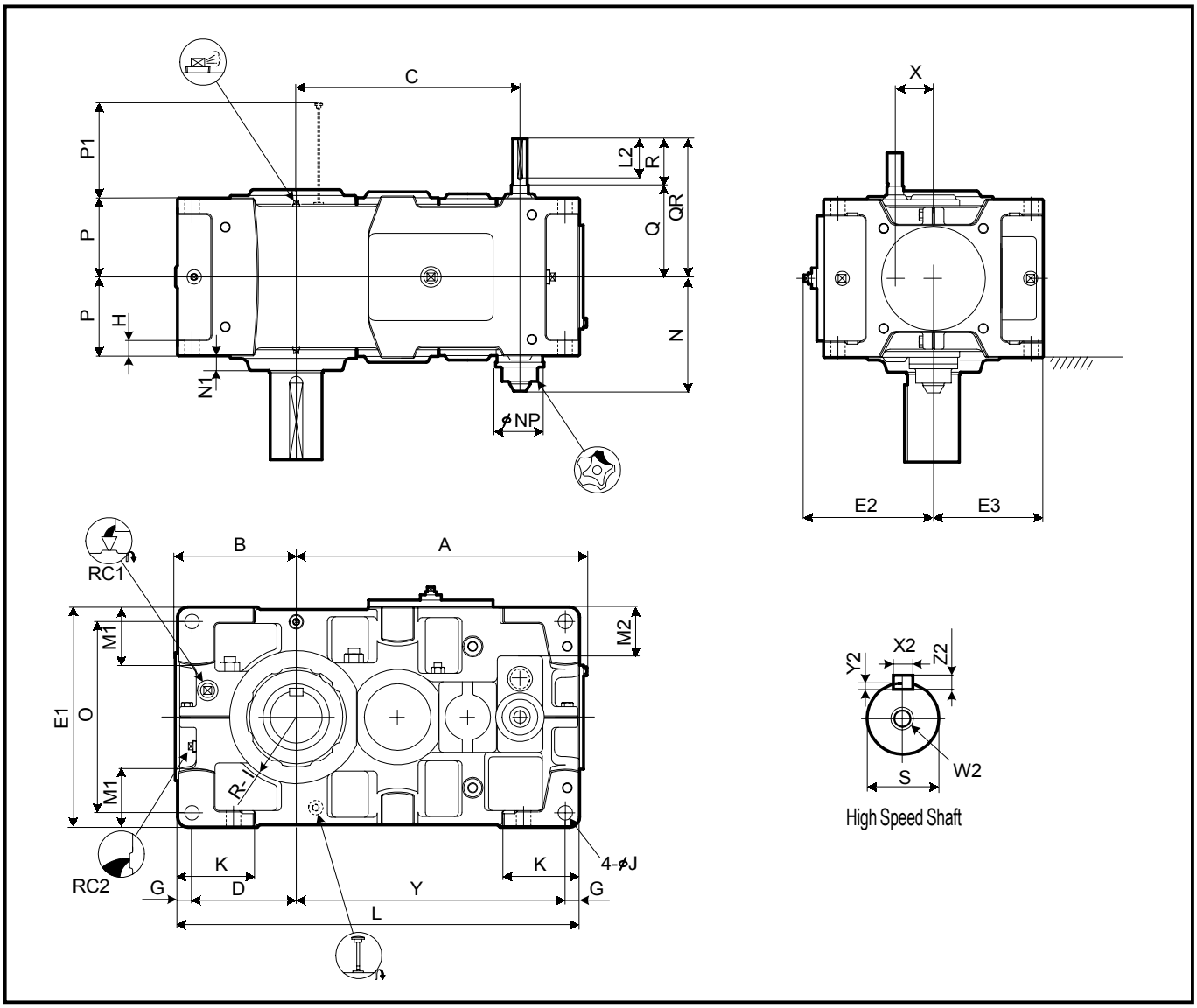

Size	A	B	C	D	E1	E2	E3	G	H	I	J	K	L	M1	M2	N	N1	NP	O	P	P1	X	Y
9060	701	291	540	251	530	313	265	35	35	160	35	180	970	140	118	275	35	117	460	190	213	92	649
9070	809	328	630	283	600	348	300	40	40	175	42	215	1115	155	128	300	38	117	520	215	233	109	752
9075	862	375	683	330	670	383	335	40	52	190	42	220	1215	195	163	300	40	117	590	215	233	109	805
9080	932	370	725	325	670	383	335	40	52	190	42	220	1275	170	140	320	45	117	590	230	268	126	870
9085	988	414	781	369	750	423	375	40	52	215	42	220	1375	210	180	320	40	117	670	230	268	126	926

Size	High Speed Shaft									RC1	RC2	Wt. kg	Oil Qty. L
	Q	QR	R	S	W2/Depth	Key							
						X2	Y2	Z2	L2				
9060	221	301	80	35k6	M12/28	10	5	8	70	1"	1"	660	32
9070	244	354	110	40k6	M16/36	12	5	8	95	1"	1"	950	53
9075	244	354	110	40k6	M16/36	12	5	8	95	1"	1"	1170	67
9080	264	374	110	45k6	M16/36	14	5.5	9	95	1"	1"	1360	65
9085	264	374	110	45k6	M16/36	14	5.5	9	95	1"	1"	1620	89

Units:mm

1.Key and keyways are based on ISO R773-1969 Close keys(JIS B1301-1996 Parallel key in fastening type)
2.The oil quantity is approximate.Oil shall be supplied within the range shown on the oil gauge.
3. Refer to the page D - 15 for dimensions not shown in these drawings.
4. Refer to the page D - 28 for the dimension of optional parts.

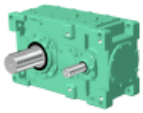

Slow Speed Shaft

Solid Shaft	Hollow Shaft (Shrink Disk Type)	Hollow Shaft (KeyType)
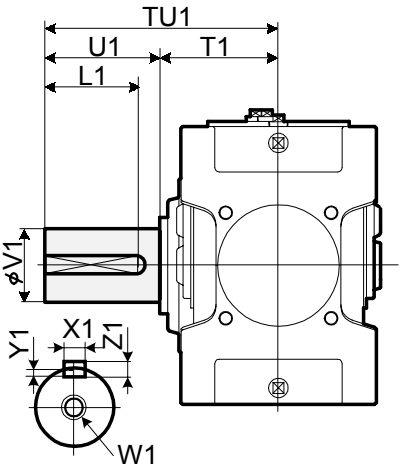	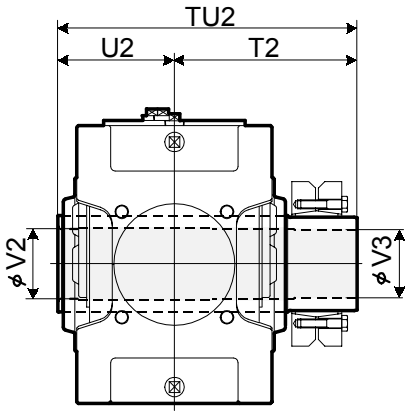 Refer to the page D - 18 for details.	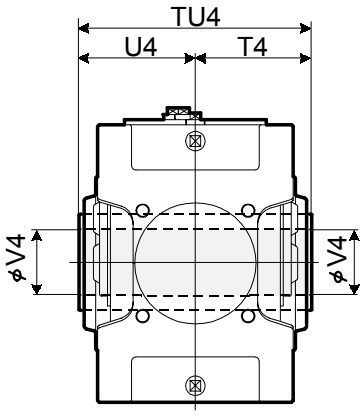 Refer to the page D - 19 for details.

Size	Solid Shaft									Hollow Shaft (Shrink Disk Type)					Hollow Shaft (Key Type)			
	TU1	T1	U1	V1	W1/Depth	Key				TU2	T2	U2	V2	V3	TU4	T4	U4	V4
						X1	Y1	Z1	L1									
9060	440	230	210	125m6	M24/50	32	11	18	185	583	353	230	128	125	470	235	235	125
9070	509	259	250	145m6	M30/60	36	12	20	225	644	384	260	148	145	530	265	265	145
9075	562	262	300	160m6	M30/60	40	13	22	275	651	386	265	158	155	530	265	265	150
9080	582	282	300	165m6	M30/60	40	13	22	275	714	429	285	173	170	570	285	285	165
9085	585	285	300	175m6	M30/60	45	15	25	270	714	429	285	183	180	570	285	285	175

Units:mm

Standard Shaft Arrangement Configuration

RL	RR
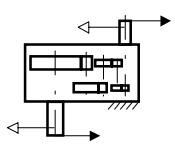	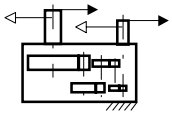

Nomenclature

P V D [Size] P 4 - [Shaft Arrangement] [Low Speed Shaft Type] - [Nominal Reduction Ratio]

Size: 9060, 9070, 9075, 9080, 9085

Shaft Arrangement: RL, RR

Low Speed Shaft Type:
- (blank) : Solid Shaft
- T : Hollow shaft (Shrink Disk type)
- K : Hollow shaft (Key type)

Size	Nominal Reduction Ratio																
	80	90	100	112	125	140	160	180	200	224	250	280	315	355	400	450	500
9060	O	O	O	O	O	O	O	O	O	O	O	O	O	O	O		
9070	O	O	O	O	O	O	O	O	O	O	O	O	O	O	O		
9075			O	O	O	O	O	O	O	O	O	O	O	O	O	O	O
9080	O	O	O	O	O	O	O	O	O	O	O	O	O	O	O		
9085			O	O	O	O	O	O	O	O	O	O	O	O	O	O	O

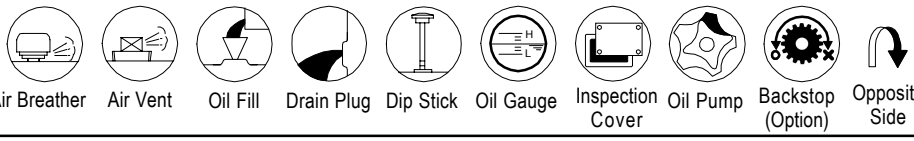

Air Breather | Air Vent | Oil Fill | Drain Plug | Dip Stick | Oil Gauge | Inspection Cover | Oil Pump | Backstop (Option) | Opposite Side

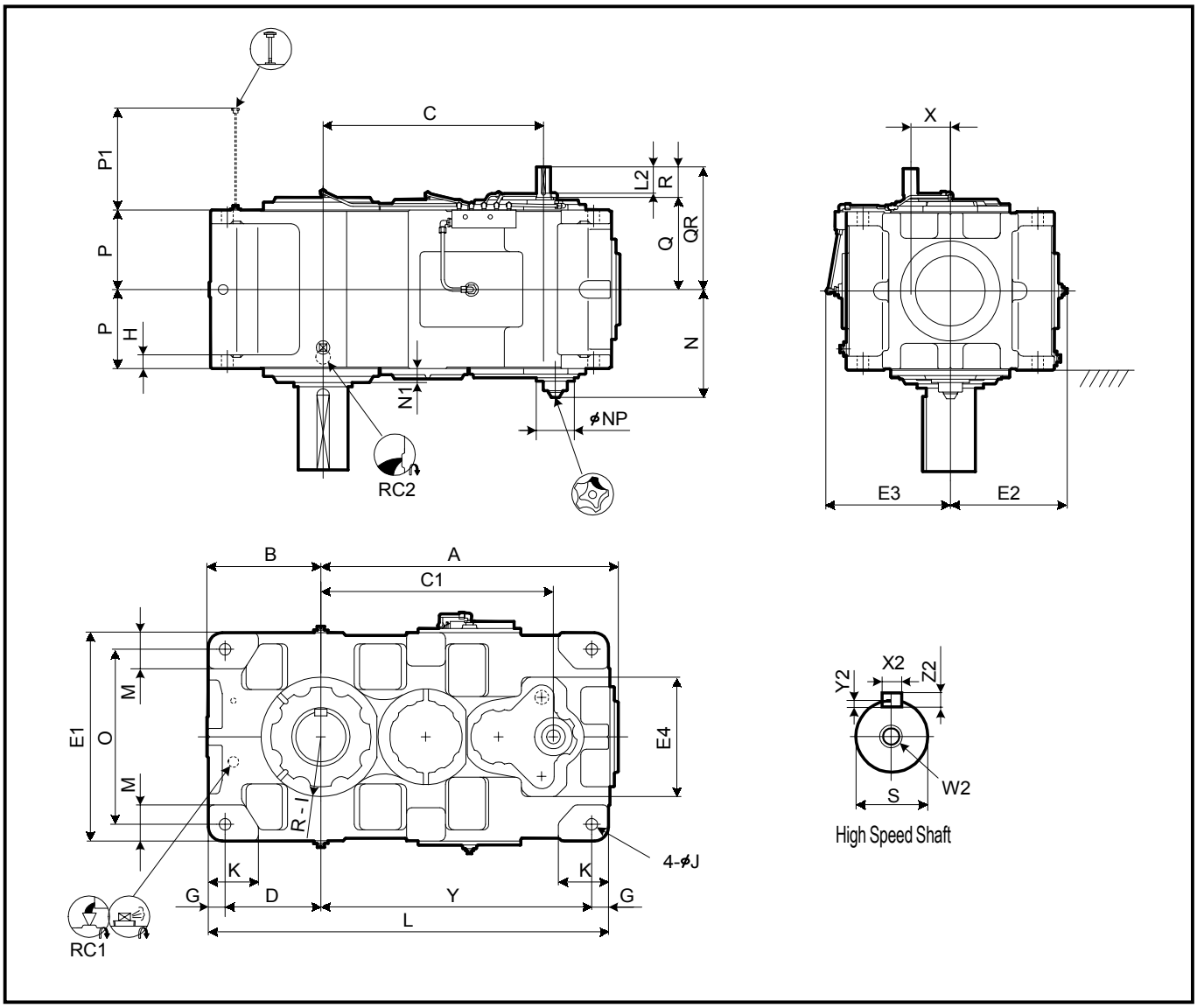

Size	A	B	C	C1	D	E1	E2	E3	E4	G	H	I	J	K	L	M	N	NP	N1	O	P	P1	X	Y
9090	1070	410	795	837	345	750	421	449	430	60	50	215	42	180	1440	130	388	137	50	630	285	367	142	975
9095	1100	440	825	867	375	800	446	474	430	60	50	235	42	200	1500	140	388	137	50	680	285	367	142	1005
9100	1204	450	901	950	375	850	471	499	500	70	55	235	48	200	1610	150	428	137	60	710	325	409	162	1095
9105	1238	485	935	984	410	900	496	524	500	70	55	260	48	220	1680	160	428	137	60	760	325	409	162	1130
9110	1354	500	1001	1050	420	950	521	-	500	75	60	265	56	220	1810	170	-	-	55	800	355	442	162	1240
9115	1403	550	1050	1099	470	1000	546	-	500	75	60	280	56	250	1910	180	-	-	55	850	355	442	162	1290

Size	High Speed Shaft									RC1	RC2	Wt.	Oil Qty.
	Q	QR	R	S	W2/Depth	Key							
						X2	Y2	Z2	L2			kg	L
9090	330	440	110	50k6	M16/36	14	5.5	9	95	1"	1 1/2"	2170	110
9095	330	440	110	50k6	M16/36	14	5.5	9	95	1"	1 1/2"	2430	140
9100	375	515	140	60m6	M20/42	18	7	11	125	1"	1 1/2"	2920	170
9105	375	515	140	60m6	M20/42	18	7	11	125	1"	1 1/2"	3400	210
9110	405	545	140	60m6	M20/42	18	7	11	125	1"	1 1/2"	4050	240
9115	405	545	140	60m6	M20/42	18	7	11	125	1"	1 1/2"	4570	295

Units:mm

1.Key and keyways are based on ISO R773-1969 Close keys(JIS B1301-1996 Parallel key in fastening type)
2.The oil quantity is approximate.Oil shall be supplied within the range shown on the oil gauge.
3. Refer to the page D - 16 for dimensions not shown in these drawings.
4. Refer to the page D - 31 for the dimension of optional parts.

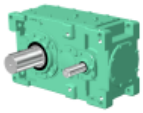

Slow Speed Shaft

Solid Shaft	Hollow Shaft (Shrink Disk Type)
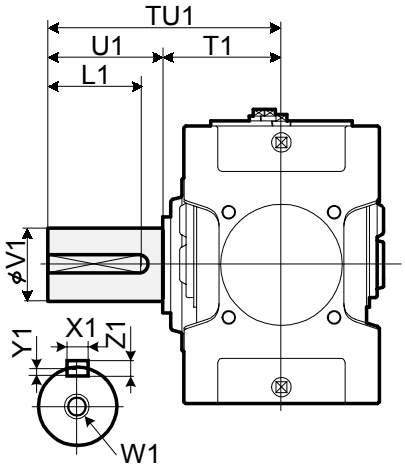	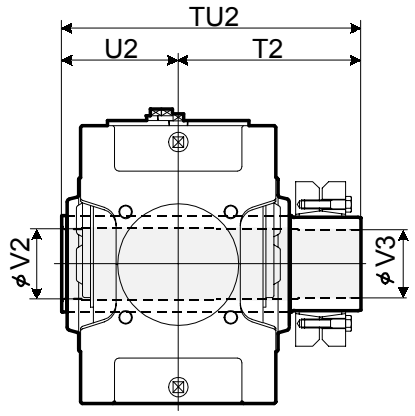 Refer to the page D - 18 for details

Size	Solid Shaft									Hollow Shaft (Shrink Disk Type)				
	TU1	T1	U1	V1	W1/Depth	Key				TU2	T2	U2	V2	V3
						X1	Y1	Z1	L1					
9090	650	350	300	180m6	M30/60	45	15	25	270	844	494	350	193	190
9095	700	350	350	190m6	M30/60	45	15	25	320	859	509	350	203	200
9100	740	390	350	200m6	M30/60	45	15	25	320	934	544	390	213	210
9105	740	390	350	220m6	M30/60	50	17	28	320	949	559	390	223	220
9110	770	420	350	220m6	M30/60	50	17	28	320	1030	610	420	243	240
9115	830	420	410	240m6	M30/60	56	20	32	375	1065	645	420	253	250

Units:mm

Standard Shaft Arrangement Configuration

RL	RR
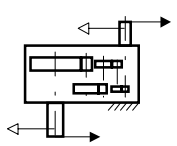	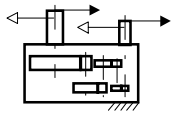

Nomenclature

P V D [Size] P 4 - [Shaft Arrangement] [Low Speed Shaft Type] - [Nominal Reduction Ratio]

Size: 9090, 9095, 9100, 9105, 9110, 9115

Shaft Arrangement: RL, RR

Low Speed Shaft Type:
(blank) : Solid Shaft
T : Hollow shaft (Shrink Disk type)

Size	Nominal Reduction Ratio														
	90	100	112	125	140	160	180	200	224	250	280	315	355	400	450
9090	O	O	O	O	O	O	O	O	O	O	O	O	O	O	
9095		O	O	O	O	O	O	O	O	O	O	O	O	O	O
9100	O	O	O	O	O	O	O	O	O	O	O	O	O	O	
9105		O	O	O	O	O	O	O	O	O	O	O	O	O	O
9110	O	O	O	O	O	O	O	O	O	O	O	O	O	O	
9115		O	O	O	O	O	O	O	O	O	O	O	O	O	O

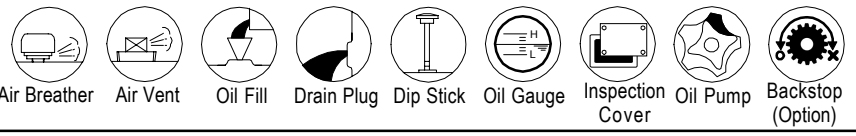

Air Breather, Air Vent, Oil Fill, Drain Plug, Dip Stick, Oil Gauge, Inspection Cover, Oil Pump, Backstop (Option), Opposite Side

Sumitomo Heavy Industries, Ltd.
http://www.shi.co.jp/ptc

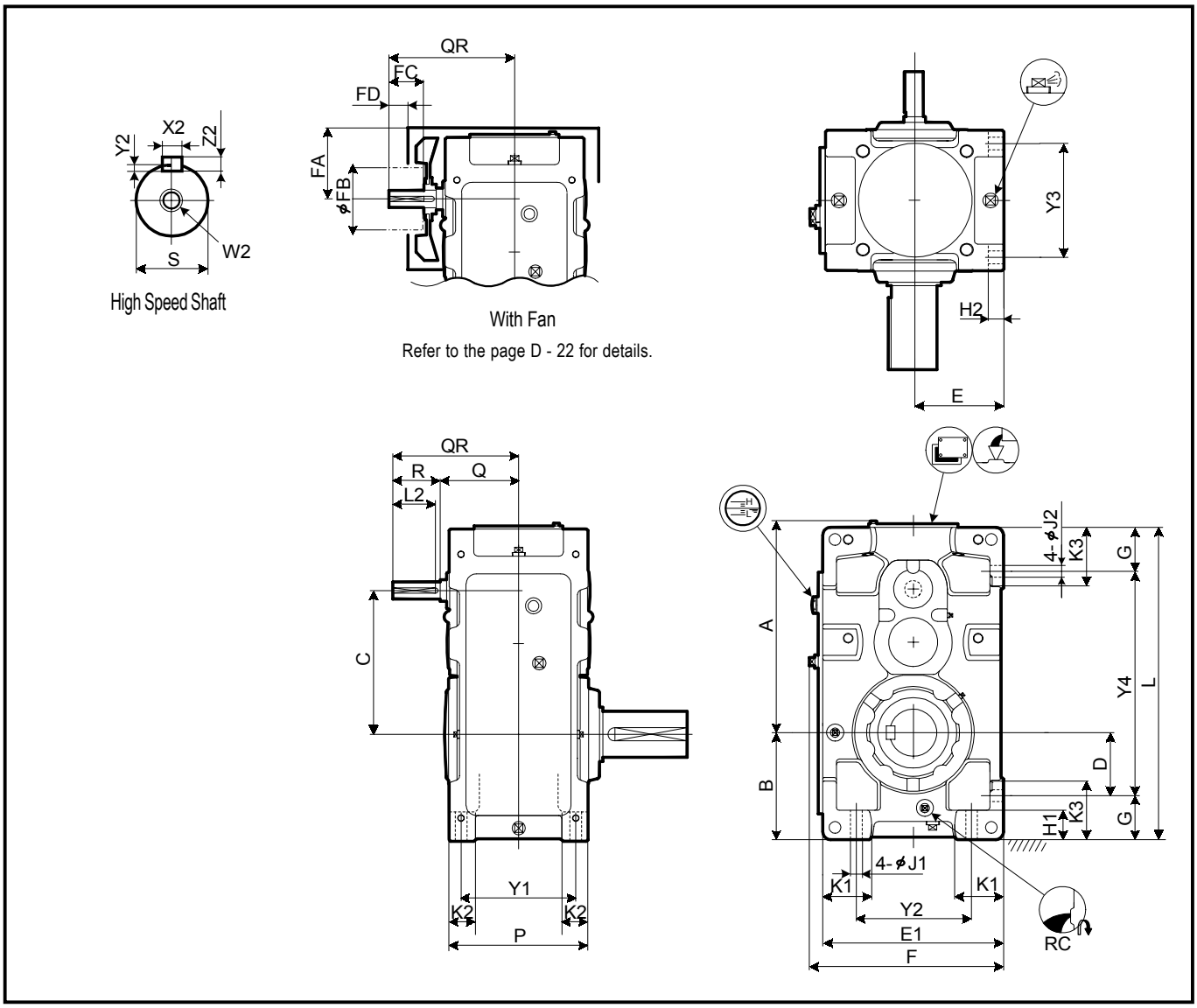

Size	A	B	C	D	E	E1	F	G	H1	H2	J1	J2	K1	K2	K3	L	P	Y1	Y2	Y3	Y4
9015	296	160	194	90	135	270	298	70	50	22	15	15	70	35	95	440	205	170	180	170	300
9025	347	175	227	95	155	310	338	80	55	25	19	19	75	40	110	505	235	195	200	195	345
9030	407	200	264	110	160	320	348	90	60	28	24	24	85	50	120	590	265	215	200	215	410
9035	438	219	295	129	185	370	398	90	60	28	24	24	100	50	120	640	265	215	250	215	460
9040	468	235	306	120	200	400	430	115	75	30	28	28	100	60	150	685	315	255	260	255	455
9050	538	255	358	138.5	210	420	450	116.5	75	32	28	28	110	60	150	775	345	285	280	285	542
9055	577	286	397	171	245	490	520	115	75	32	28	28	135	60	150	845	345	285	350	285	615

Size	High Speed Shaft									Fan				RC1	RC2	Wt. kg	Oil Qty. L
	Q	QR	R	S	W2/Depth	Key				FA	FB	FC	FD				
						X2	Y2	Z2	L2								
9015	131	211	80	30k6	M10/22	8	4	7	70	129	125	50	30	3/4"	3/4"	100	9
9025	146	225	80	35k6	M12/28	10	5	8	70	143	140	50	30	3/4"	3/4"	140	13
9030	159	269	110	40k6	M16/36	12	5	8	95	169	140	80	52	3/4"	3/4"	195	16
9035	159	269	110	40k6	M16/36	12	5	8	95	169	140	80	52	3/4"	3/4"	215	22
9040	174	284	110	50k6	M16/36	14	5.5	9	95	188	160	80	52	1"	1"	285	29
9050	193	303	110	55m6	M20/42	16	6	10	95	208	160	80	52	1"	1"	415	36
9055	193	303	110	55m6	M20/42	16	6	10	95	208	160	80	52	1"	1"	475	47

Units:mm

1.Key and keyways are based on ISO R773-1969 Close keys(JIS B1301-1996 Parallel key in fastening type)
2.The oil quantity is approximate.Oil shall be supplied within the range shown on the oil gauge.
3. Refer to the page D - 12 for dimensions not shown in these drawings.
4. Refer to the page D - 26 for the dimension of optional parts.

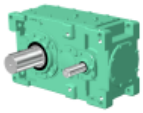

Slow Speed Shaft

Solid Shaft	Hollow Shaft (Shrink Disk Type)	Hollow Shaft (KeyType)
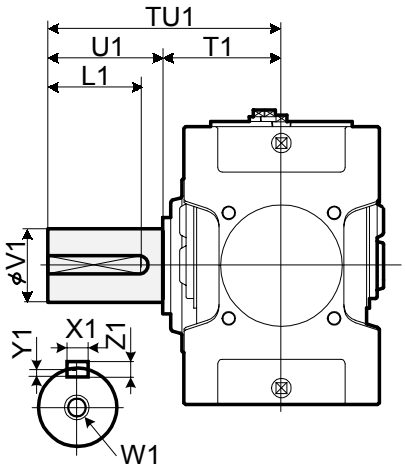	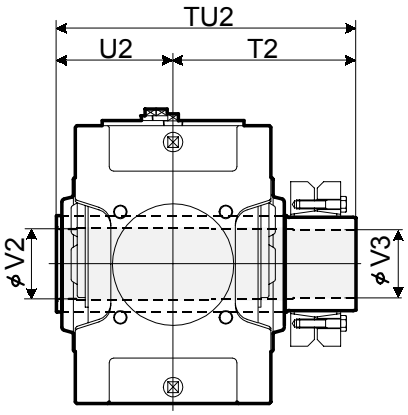	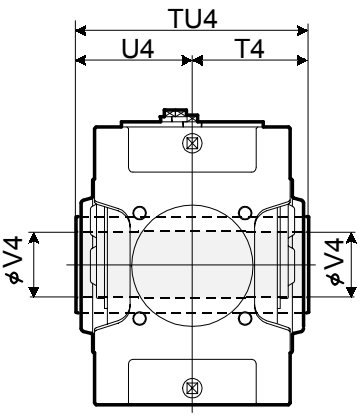
	Refer to the page D-18 for details.	Refer to the page D -19 for details.

Size	Solid Shaft									Hollow Shaft (Shrink Disk Type)					Hollow Shaft (Key Type)			
	TU1	T1	U1	V1	W1/Depth	Key				TU2	T2	U2	V2	V3	TU4	T4	U4	V4
						X1	Y1	Z1	L1									
9015	245	135	110	58m6	M20/42	18	7	11	95	328	193	135	63	60	270	135	135	55
9025	285	145	140	70m6	M20/42	20	7.5	12	125	358	213	145	73	70	300	150	150	65
9030	330	160	170	80m6	M20/42	22	9	14	150	393	233	160	83	80	330	165	165	75
9035	330	160	170	90m6	M20/42	25	9	14	150	403	243	160	88	85	330	165	165	85
9040	349	179	170	95m6	M24/50	25	9	14	150	448	268	180	98	95	360	180	180	90
9050	411	201	210	110m6	M24/50	28	10	16	190	503	303	200	108	105	410	205	205	105
9055	411	201	210	120m6	M24/50	32	11	18	185	528	323	205	123	120	410	205	205	115

Units:mm

Standard Shaft Arrangement Configuration

RL	RR	RB	LR	LL	LB	BL	BR	BB
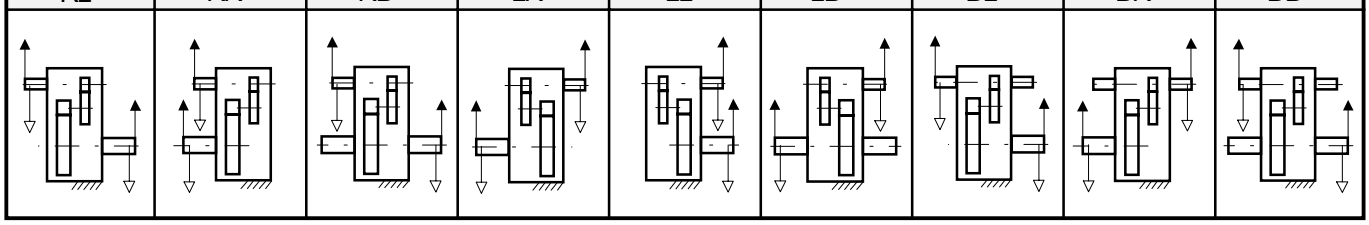								

Nomenclature

P W A [ ] P 2 - [ ] [ ] - [ ]

Size: 9015, 9025, 9030, 9035, 9040, 9050, 9055

Shaft Arrangement: RL, RR, RB, LR, LL, LB, BL, BR, BB

Low Speed Shaft Type:
(blank) : Solid Shaft
T : Hollow shaft (Shrink Disk type)
K : Hollow shaft (Key type)

Nominal Reduction Ratio

Size	6.3	7.1	8	9	10	11.2	12.5	14	16	18	20	22.4
9015	O	O	O	O	O	O	O	O	O	O		
9025	O	O	O	O	O	O	O	O	O	O		
9030	O	O	O	O	O	O	O	O	O	O		
9035			O	O	O	O	O	O	O	O	O	O
9040	O	O	O	O	O	O	O	O	O	O		
9050	O	O	O	O	O	O	O	O	O	O		
9055			O	O	O	O	O	O	O	O	O	O

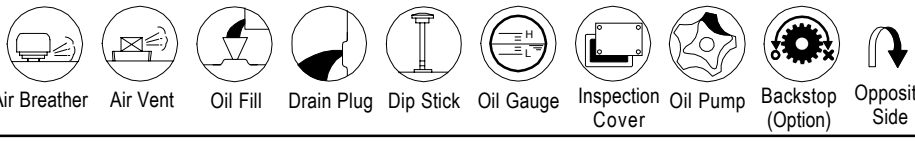

Air Breather, Air Vent, Oil Fill, Drain Plug, Dip Stick, Oil Gauge, Inspection Cover, Oil Pump, Backstop (Option), Opposite Side

Sumitomo Heavy Industries, Ltd.
http://www.shi.co.jp/ptc

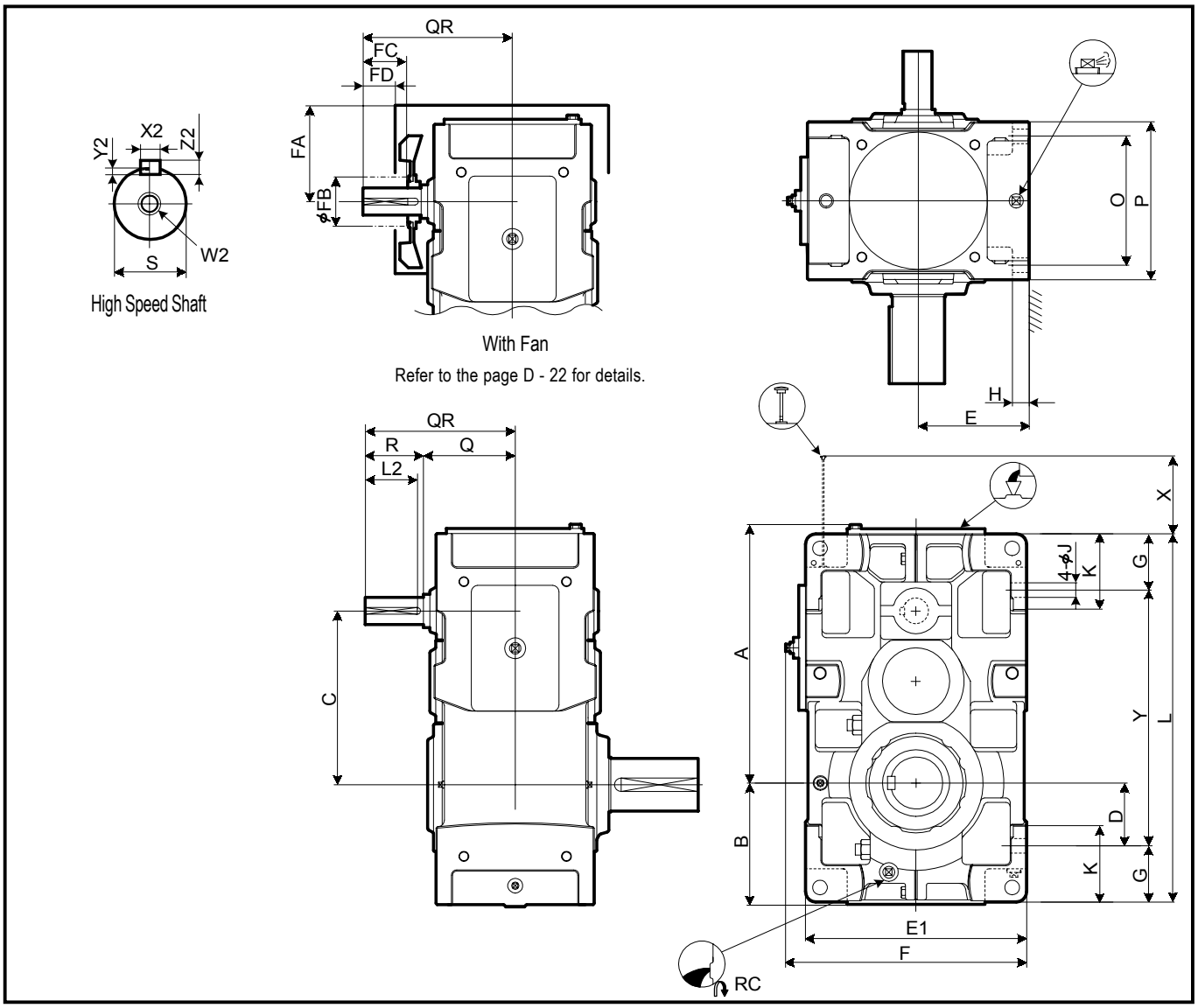

Size	A	B	C	D	E	E1	F	G	H	J	K	L	O	P	X	Y
9060	622	291	414	151	265	530	577	135	35	35	180	885	310	380	133	615
9070	720	328	482	163	300	600	647	160	40	42	215	1020	350	430	138	700
9075	773	375	535	210	335	670	717	160	52	42	220	1120	350	430	138	800
9080	813	370	556	205	335	670	717	160	52	42	220	1155	380	460	169	835
9085	869	414	612	249	375	750	797	160	52	42	220	1255	380	460	169	935

Size	High Speed Shaft									Fan				RC	Wt.	Oil Qty.
	Q	QR	R	S	W2/Depth	Key				FA	FB	FC	FD		kg	L
						X2	Y2	Z2	L2							
9060	220	360	140	65m6	M20/42	18	7	11	125	240	200	105	65	1"	610	53
9070	245	385	140	75m6	M20/42	20	7.5	12	125	274	225	105	65	1"	860	84
9075	245	385	140	75m6	M20/42	20	7.5	12	125	274	225	105	65	1"	1110	100
9080	264	434	170	85m6	M20/42	22	9	14	150	296	225	135	95	1"	1240	109
9085	264	434	170	85m6	M20/42	22	9	14	150	296	225	135	95	1"	1500	137

Units:mm

1.Key and keyways are based on ISO R773-1969 Close keys(JIS B1301-1996 Parallel key in fastening type)
2.The oil quantity is approximate.Oil shall be supplied within the range shown on the oil gauge.
3. Refer to the page D - 14 for dimensions not shown in these drawings.
4. Refer to the page D - 29 for the dimension of optional parts.

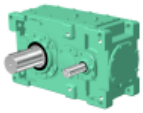

Slow Speed Shaft

Solid Shaft	Hollow Shaft (Shrink Disk Type)	Hollow Shaft (KeyType)
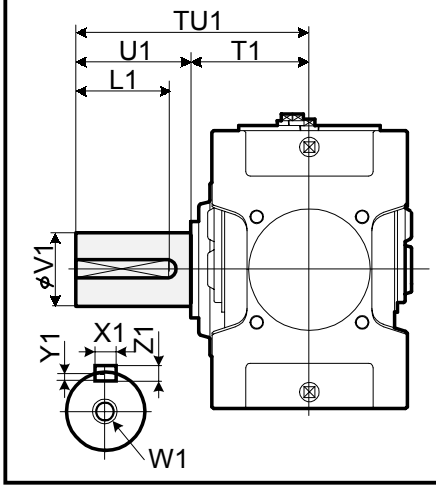	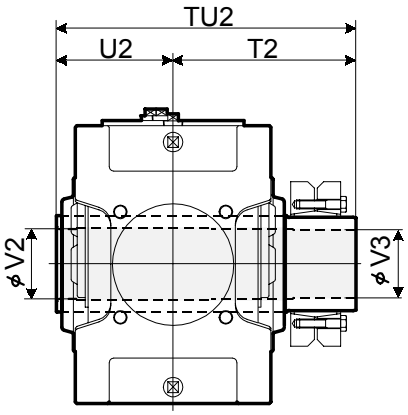 Refer to the page D-18 for details.	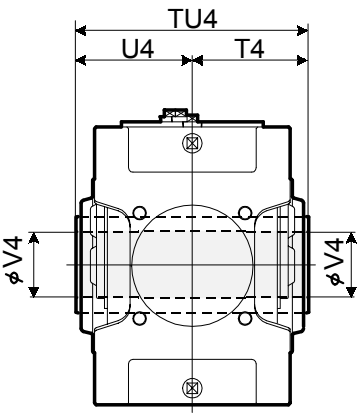 Refer to the page D -19 for details.

Size	Solid Shaft									Hollow Shaft (Shrink Disk Type)					Hollow Shaft (Key Type)			
	TU1	T1	U1	V1	W1/Depth	Key				TU2	T2	U2	V2	V3	TU4	T4	U4	V4
						X1	Y1	Z1	L1									
9060	440	230	210	125m6	M24/50	32	11	18	185	583	353	230	128	125	470	235	235	125
9070	509	259	250	145m6	M30/60	36	12	20	225	644	384	260	148	145	530	265	265	145
9075	562	262	300	160m6	M30/60	40	13	22	275	651	386	265	158	155	530	265	265	150
9080	582	282	300	165m6	M30/60	40	13	22	275	714	429	285	173	170	570	285	285	165
9085	585	285	300	175m6	M30/60	45	15	25	270	714	429	285	183	180	570	285	285	175

Units:mm

Standard Shaft Arrangement Configuration

RL	RR	RB	LR	LL	LB	BL	BR	BB
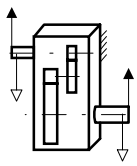	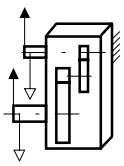	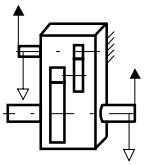	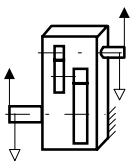	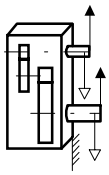	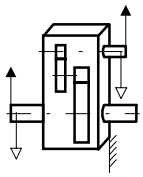	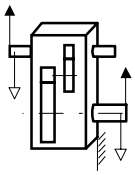	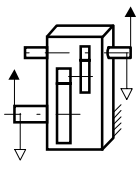	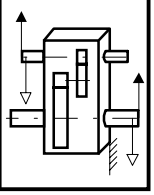

Nomenclature

P W D [Size] P 2 W - [Shaft Arrangement] [Low Speed Shaft Type] - [Nominal Reduction Ratio]

Size: 9060, 9070, 9075, 9080, 9085

Shaft Arrangement: RL, RR, RB, LR, LL, LB, BL, BR, BB

Low Speed Shaft Type:
(blank) : Solid Shaft
T : Hollow shaft (Shrink Disk type)
K : Hollow shaft (Key type)

Size	Nominal Reduction Ratio											
	6.3	7.1	8	9	10	11.2	12.5	14	16	18	20	22.4
9060	O	O	O	O	O	O	O	O	O	O		
9070	O	O	O	O	O	O	O	O	O	O		
9075			O	O	O	O	O	O	O	O	O	O
9080	O	O	O	O	O	O	O	O	O	O		
9085			O	O	O	O	O	O	O	O	O	O

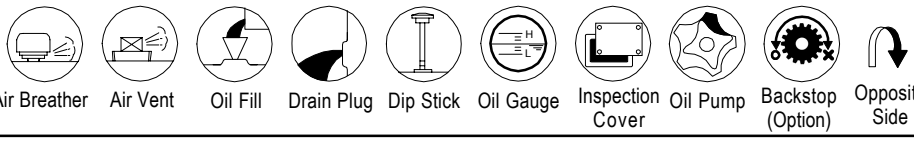

Air Breather, Air Vent, Oil Fill, Drain Plug, Dip Stick, Oil Gauge, Inspection Cover, Oil Pump, Backstop (Option), Opposite Side

Sumitomo Heavy Industries, Ltd.
http://www.shi.co.jp/ptc

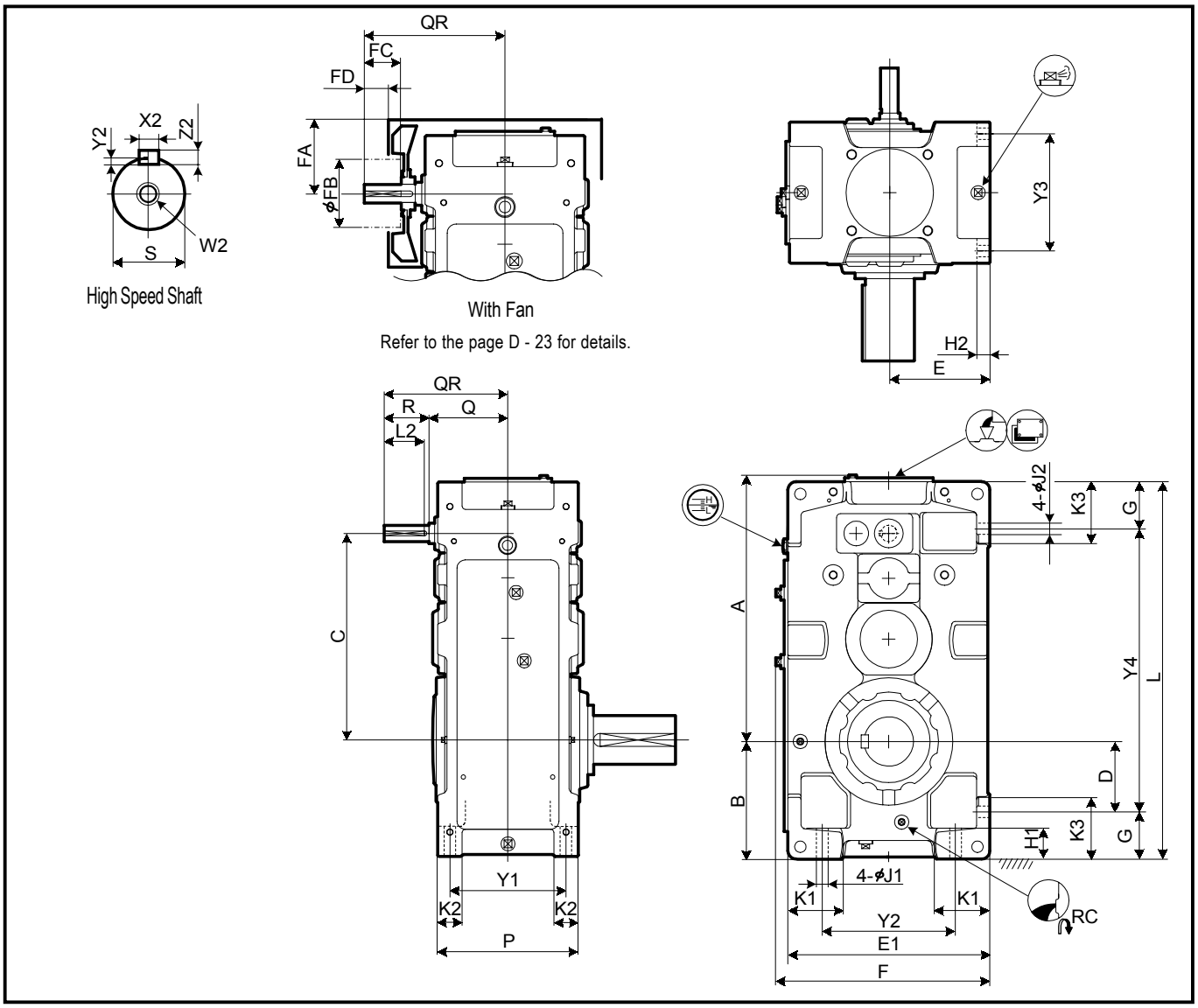

Size	A	B	C	D	E	E1	F	G	H1	H2	J1	J2	K1	K2	K3	L	P	Y1	Y2	Y3	Y4
9015	339	160	257	90	135	270	298	70	50	22	15	15	70	35	95	485	205	170	180	170	345
9025	409	175	306	95	155	310	338	80	55	25	19	19	75	40	110	570	235	195	210	195	410
9030	454	200	343	110	160	320	348	90	60	28	24	24	85	50	120	640	265	215	200	215	460
9035	485	219	374	129	185	370	398	90	60	28	24	24	100	50	120	690	265	215	250	215	510
9040	541	235	398	120	200	400	430	115	75	30	28	28	100	60	150	759	315	255	260	255	529
9050	610	255	467	138.5	210	420	450	116.5	75	32	28	28	110	60	150	848	345	285	280	285	615
9055	649	286	506	171	245	490	520	115	75	32	28	28	135	60	150	918	345	285	350	285	688

Size	High Speed Shaft									Fan				RC1	RC2	Wt. kg	Oil Qty. L
	Q	QR	R	S	W2/Depth	Key				FA	FB	FC	FD				
						X2	Y2	Z2	L2								
9015	130	190	60	25k6	M10/22	8	4	7	50	111	125	30	10	3/4"	3/4"	105	11
9025	144	204	60	28k6	M10/22	8	4	7	50	129	125	30	10	3/4"	3/4"	150	15
9030	161	241	80	30k6	M10/22	8	4	7	70	140	125	50	30	3/4"	3/4"	205	20
9035	161	241	80	30k6	M10/22	8	4	7	70	150	140	50	22	3/4"	3/4"	225	25
9040	176	256	80	35k6	M12/28	10	5	8	70	170	140	50	22	1"	1"	305	35
9050	194	304	110	40k6	M16/36	12	5	8	95	172	140	80	52	1"	1"	445	45
9055	194	304	110	40k6	M16/36	12	5	8	95	172	140	80	52	1"	1"	505	59

Units:mm

1.Key and keyways are based on ISO R773-1969 Close keys(JIS B1301-1996 Parallel key in fastening type)
2.The oil quantity is approximate.Oil shall be supplied within the range shown on the oil gauge.
3. Refer to the page D - 13 for dimensions not shown in these drawings.
4. Refer to the page D - 26 for the dimension of optional parts.

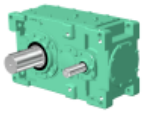

Slow Speed Shaft

Solid Shaft	Hollow Shaft (Shrink Disk Type)	Hollow Shaft (KeyType)
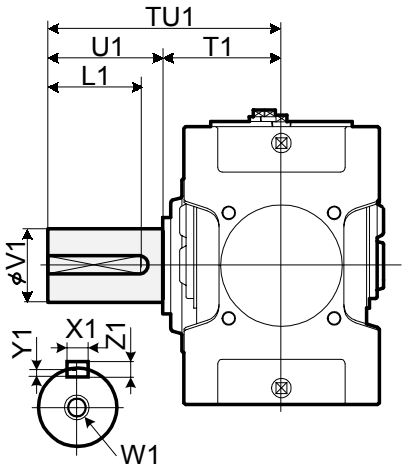	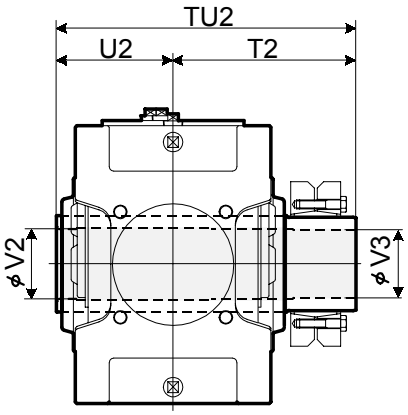	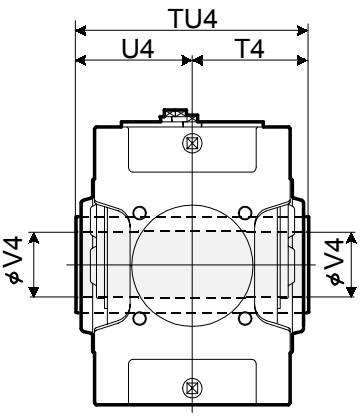
	Refer to the page D-18 for details.	Refer to the page D -19 for details.

Size	Solid Shaft									Hollow Shaft (Shrink Disk Type)					Hollow Shaft (Key Type)			
	TU1	T1	U1	V1	W1/Depth	Key				TU2	T2	U2	V2	V3	TU4	T4	U4	V4
						X1	Y1	Z1	L1									
9015	245	135	110	58m6	M20/42	18	7	11	95	328	193	135	63	60	270	135	135	55
9025	285	145	140	70m6	M20/42	20	7.5	12	125	358	213	145	73	70	300	150	150	65
9030	330	160	170	80m6	M20/42	22	9	14	150	393	233	160	83	80	330	165	165	75
9035	330	160	170	90m6	M20/42	25	9	14	150	403	243	160	88	85	330	165	165	85
9040	349	179	170	95m6	M24/50	25	9	14	150	448	268	180	98	95	360	180	180	90
9050	411	201	210	110m6	M24/50	28	10	16	190	503	303	200	108	105	410	205	205	105
9055	411	201	210	120m6	M24/50	32	11	18	185	528	323	205	123	120	410	205	205	115

Units:mm

Standard Shaft Arrangement Configuration

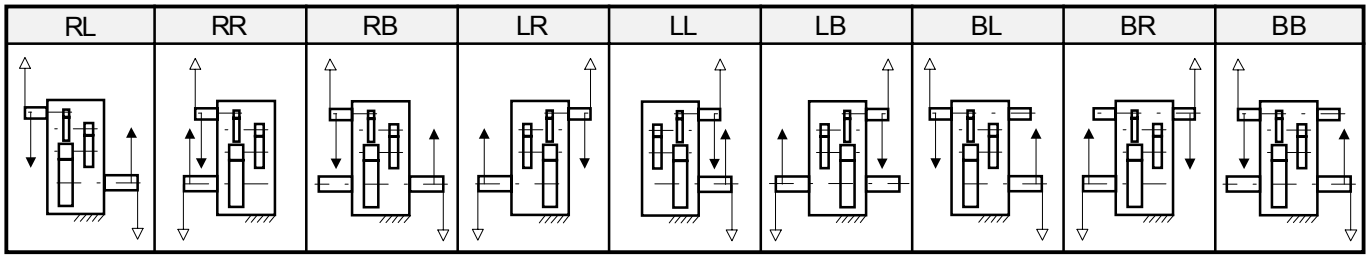

Nomenclature

P W A [Size] P 3 - [Shaft Arrangement] [Low Speed Shaft Type] - [Nominal Reduction Ratio]

Size: 9015, 9025, 9030, 9035, 9040, 9050, 9055

Shaft Arrangement: RL, RR, RB, LR, LL, LB, BL, BR, BB

Low Speed Shaft Type:
- (blank) : Solid Shaft
- T : Hollow shaft (Shrink Disk type)
- K : Hollow shaft (Key type)

Size	Nominal Reduction Ratio													
	20	22.4	25	28	31.5	35.5	40	45	50	56	63	71	80	90
9015	O	O	O	O	O	O	O	O						
9025	O	O	O	O	O	O	O	O						
9030	O	O	O	O	O	O	O	O	O	O	O	O		
9035			O	O	O	O	O	O	O	O	O	O	O	O
9040	O	O	O	O	O	O	O	O	O	O	O	O		
9050	O	O	O	O	O	O	O	O	O	O	O	O		
9055			O	O	O	O	O	O	O	O	O	O	O	O

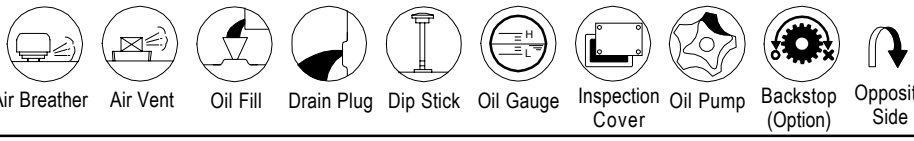

Air Breather | Air Vent | Oil Fill | Drain Plug | Dip Stick | Oil Gauge | Inspection Cover | Oil Pump | Backstop (Option) | Opposite Side

Sumitomo Heavy Industries, Ltd.
http://www.shi.co.jp/ptc

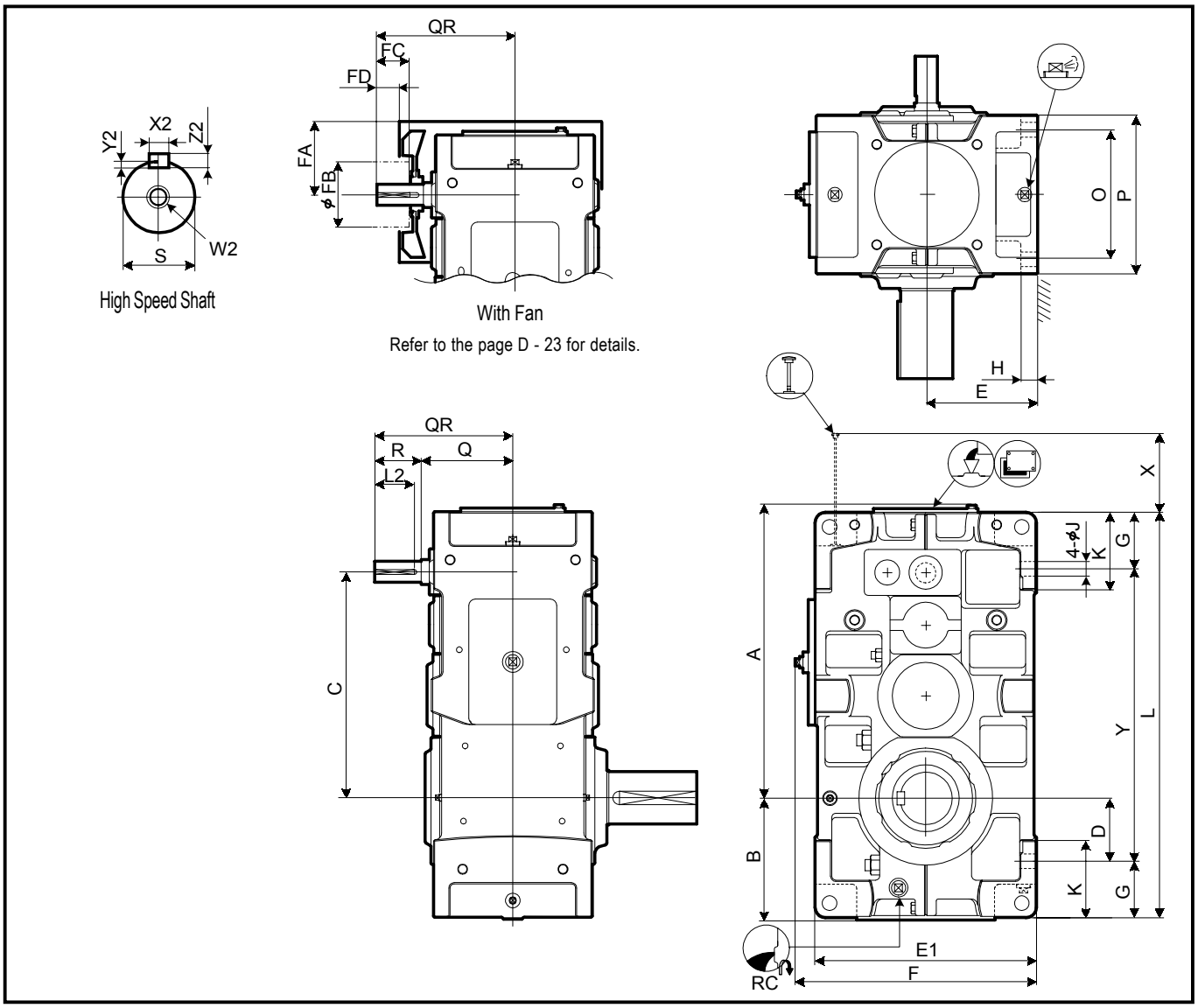

Size	A	B	C	D	E	E1	F	G	H	J	K	L	O	P	X	Y
9060	702	291	540	151	265	530	577	135	35	35	180	970	310	380	216	700
9070	810	328	630	163	300	600	647	160	40	42	215	1115	350	430	233	795
9075	863	375	683	210	335	670	717	160	52	42	220	1215	350	430	233	895
9080	933	370	725	205	335	670	717	160	52	42	220	1275	380	460	285	955
9085	989	414	781	249	375	750	797	160	52	42	220	1375	380	460	285	1055

Size	High Speed Shaft									Fan				RC	Wt. kg	Oil Qty. L
	Q	QR	R	S	W2/Depth	Key				FA	FB	FC	FD			
						X2	Y2	Z2	L2							
9060	219	329	110	50k6	M16/36	14	5.5	9	95	199	160	80	52	1"	660	68
9070	244	354	110	55m6	M20/42	16	6	10	95	221	160	80	52	1"	940	106
9075	244	354	110	55m6	M20/42	16	6	10	95	221	160	80	52	1"	1160	120
9080	265	405	140	65m6	M20/42	18	7	11	125	247	200	105	65	1"	1350	130
9085	265	405	140	65m6	M20/42	18	7	11	125	247	200	105	65	1"	1610	176

Units:mm

1.Key and keyways are based on ISO R773-1969 Close keys(JIS B1301-1996 Parallel key in fastening type)
2.The oil quantity is approximate.Oil shall be supplied within the range shown on the oil gauge.
3. Refer to the page D - 15 for dimensions not shown in these drawings.
4. Refer to the page D - 29 for the dimension of optional parts.

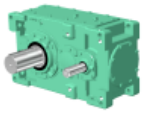

Slow Speed Shaft

Solid Shaft	Hollow Shaft (Shrink Disk Type)	Hollow Shaft (KeyType)
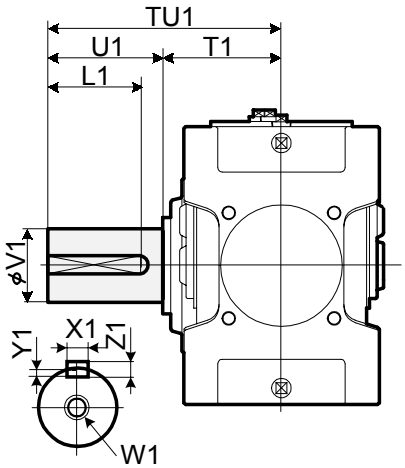	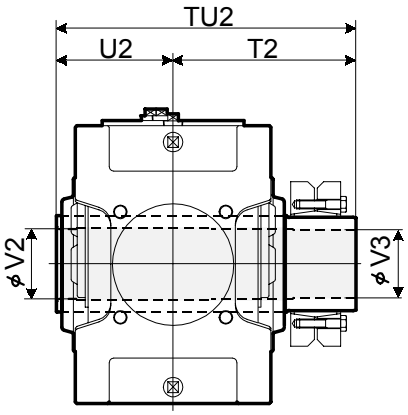 Refer to the page D-18 for details.	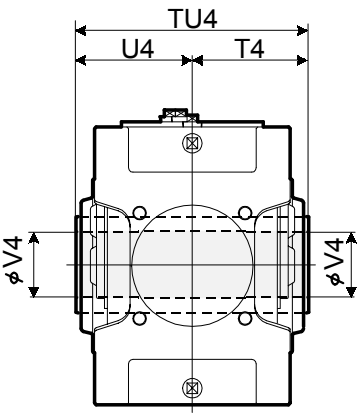 Refer to the page D -19 for details.

Size	Solid Shaft									Hollow Shaft (Shrink Disk Type)					Hollow Shaft (Key Type)			
	TU1	T1	U1	V1	W1/Depth	Key				TU2	T2	U2	V2	V3	TU4	T4	U4	V4
						X1	Y1	Z1	L1									
9060	440	230	210	125m6	M24/50	32	11	18	185	583	353	230	128	125	470	235	235	125
9070	509	259	250	145m6	M30/60	36	12	20	225	644	384	260	148	145	530	265	265	145
9075	562	262	300	160m6	M30/60	40	13	22	275	651	386	265	158	155	530	265	265	150
9080	582	282	300	165m6	M30/60	40	13	22	275	714	429	285	173	170	570	285	285	165
9085	585	285	300	175m6	M30/60	45	15	25	270	714	429	285	183	180	570	285	285	175

Units:mm

Standard Shaft Arrangement Configuration

RL	RR	RB	LR	LL	LB	BL	BR	BB
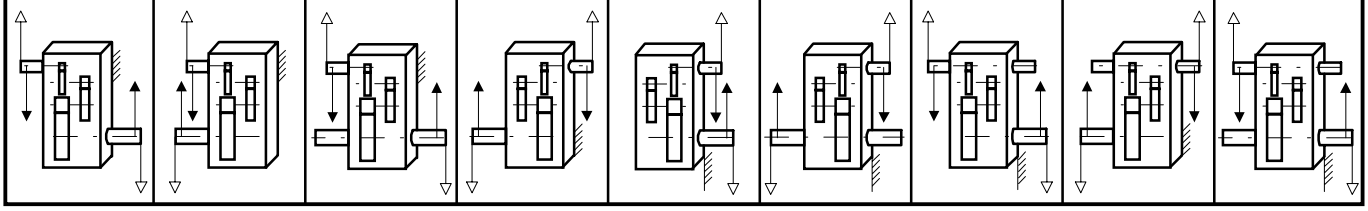								

Nomenclature

P W D [ ] P 3 W - [ ] [ ] - [ ]

Size: 9060, 9070, 9075, 9080, 9085

Shaft Arrangement: RL, RR, RB, LR, LL, LB, BL, BR, BB

Low Speed Shaft Type:
(blank) : Solid Shaft
T : Hollow shaft (Shrink Disk type)
K : Hollow shaft (Key type)

Nominal Reduction Ratio

Size	20	22.4	25	28	31.5	35.5	40	45	50	56	63	71	80	90
9060	O	O	O	O	O	O	O	O	O	O	O	O		
9070	O	O	O	O	O	O	O	O	O	O	O	O		
9075			O	O	O	O	O	O	O	O	O	O	O	O
9080	O	O	O	O	O	O	O	O	O	O	O	O		
9085			O	O	O	O	O	O	O	O	O	O	O	O

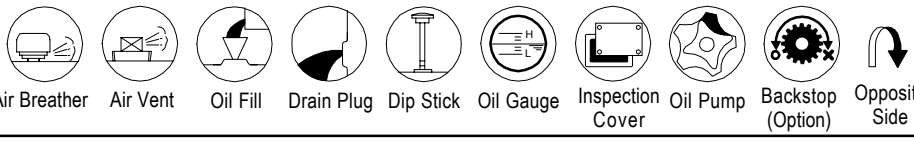

Air Breather | Air Vent | Oil Fill | Drain Plug | Dip Stick | Oil Gauge | Inspection Cover | Oil Pump | Backstop (Option) | Opposite Side

Sumitomo Heavy Industries, Ltd.
http://www.shi.co.jp/ptc

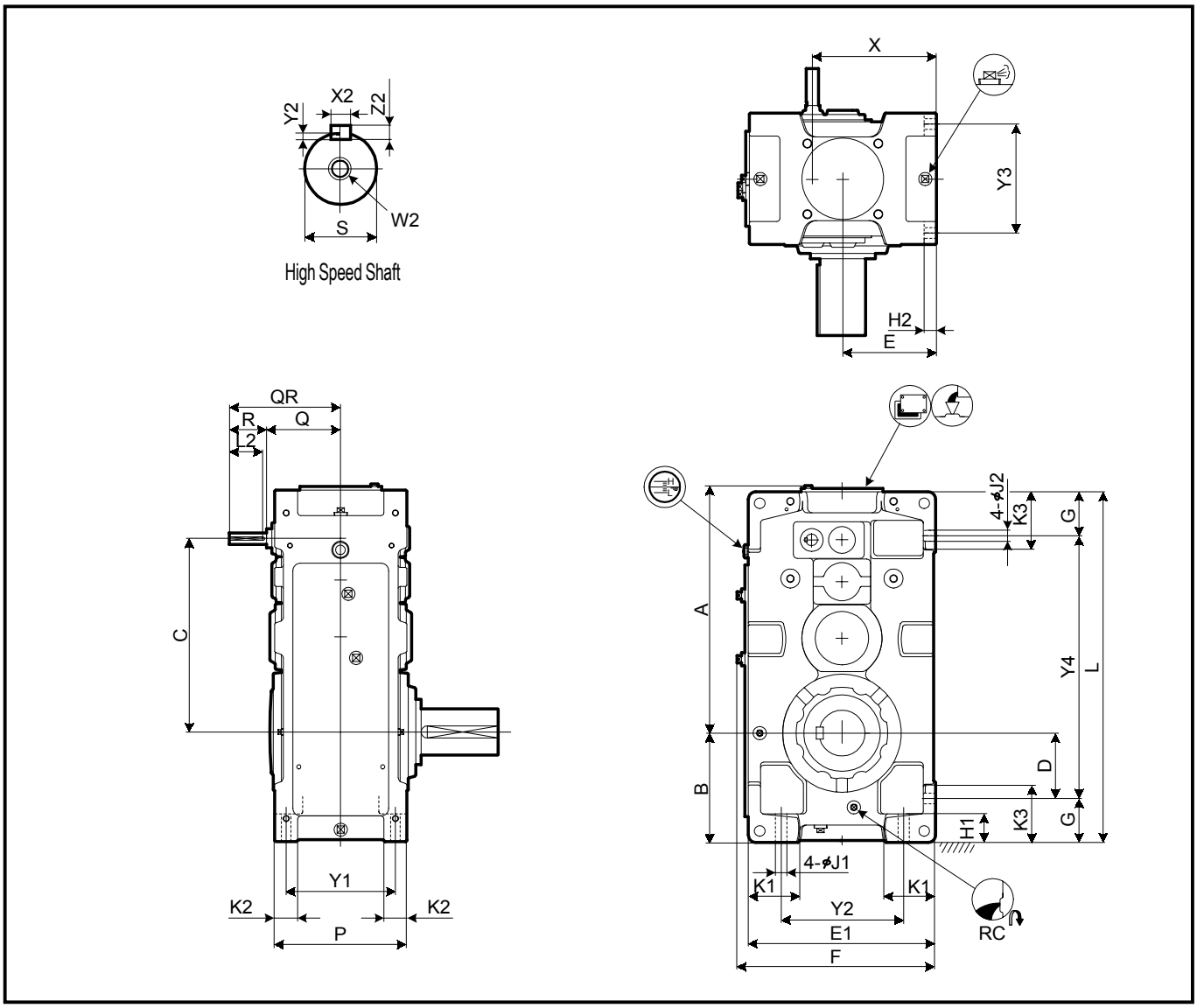

Size	A	B	C	D	E	E1	F	G	H1	H2	J1	J2	K1	K2	K3	L	P	Y1	Y2	Y3	Y4
9030	454	200	343	110	160	320	348	90	60	28	24	24	85	50	120	640	265	215	200	215	460
9035	485	219	374	129	185	370	398	90	60	28	24	24	100	50	120	690	265	215	250	215	510
9040	541	235	398	120	200	400	430	115	75	30	28	28	100	60	150	759	315	255	260	255	529
9050	610	255	467	138.5	210	420	450	116.5	75	32	28	28	110	60	150	848	345	285	280	285	615
9055	649	286	506	171	245	490	520	115	75	32	28	28	135	60	150	918	345	285	350	285	688

Size	High Speed Shaft									RC1	RC2	Wt.	Oil Qty.
	Q	QR	R	S	W2/Depth	Key							
						X2	Y2	Z2	L2			kg	L
9030	159	219	60	25k6	M10/22	8	4	7	50	3/4"	3/4"	210	20
9035	159	219	60	25k6	M10/22	8	4	7	50	3/4"	3/4"	230	25
9040	175	135	60	28k6	M10/22	8	4	7	50	1"	1"	310	35
9050	195	275	80	30k6	M10/22	8	4	7	70	1"	1"	450	46
9055	195	275	80	30k6	M10/22	8	4	7	70	1"	1"	510	59

Units:mm

1.Key and keyways are based on ISO R773-1969 Close keys(JIS B1301-1996 Parallel key in fastening type)
2.The oil quantity is approximate.Oil shall be supplied within the range shown on the oil gauge.
3. Refer to the page D - 13 for dimensions not shown in these drawings.
4. Refer to the page D - 26 for the dimension of optional parts.

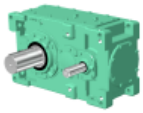

Slow Speed Shaft

Solid Shaft	Hollow Shaft (Shrink Disk Type)	Hollow Shaft (KeyType)
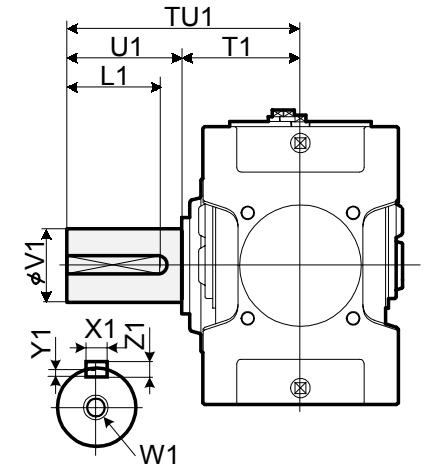	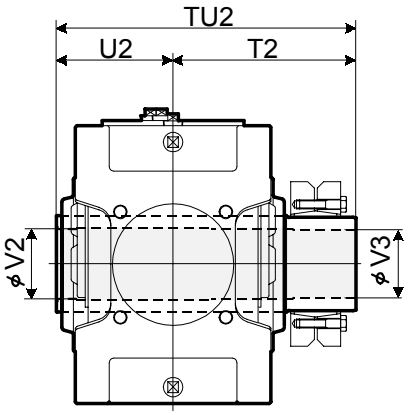 Refer to the page D-18 for details.	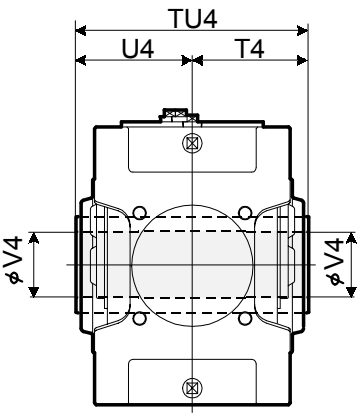 Refer to the page D -19 for details.

Size	Solid Shaft									Hollow Shaft (Shrink Disk Type)					Hollow Shaft (Key Type)			
	TU1	T1	U1	V1	W1/Depth	Key				TU2	T2	U2	V2	V3	TU4	T4	U4	V4
						X1	Y1	Z1	L1									
9030	330	160	170	80m6	M20/42	22	9	14	150	393	233	160	83	80	330	165	165	75
9035	330	160	170	90m6	M20/42	25	9	14	150	403	243	160	88	85	330	165	165	85
9040	349	179	170	95m6	M24/50	25	9	14	150	448	268	180	98	95	360	180	180	90
9050	411	201	210	110m6	M24/50	28	10	16	190	503	303	200	108	105	410	205	205	105
9055	411	201	210	120m6	M24/50	32	11	18	185	528	323	205	123	120	410	205	205	115

Units:mm

Standard Shaft Arrangement Configuration

RL	RR	RB	LR	LL	LB	BL	BR	BB
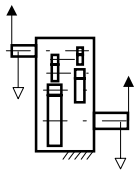	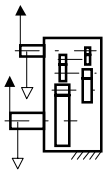	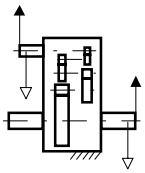	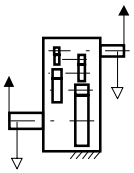	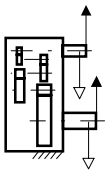	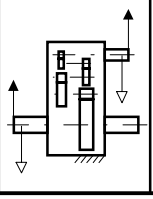	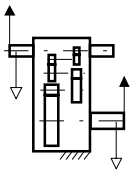	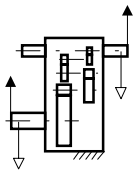	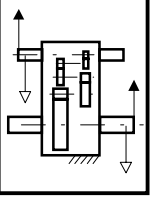

Nomenclature

P W A [Size] P 4 - [Shaft Arrangement] [Low Speed Shaft Type] - [Nominal Reduction Ratio]

Size: 9030, 9035, 9040, 9050, 9055

Shaft Arrangement: RL, RR, RB, LR, LL, LB, BL, BR, BB

Low Speed Shaft Type:
(blank) : Solid Shaft
T : Hollow shaft (Shrink Disk type)
K : Hollow shaft (Key type)

Size	Nominal Reduction Ratio																
	80	90	100	112	125	140	160	180	200	224	250	280	315	355	400	450	500
9030	O	O	O	O	O	O	O	O	O	O							
9035			O	O	O	O	O	O	O	O	O	O					
9040	O	O	O	O	O	O	O	O	O	O							
9050	O	O	O	O	O	O	O	O	O	O	O	O	O	O	O		
9055			O	O	O	O	O	O	O	O	O	O	O	O	O	O	O

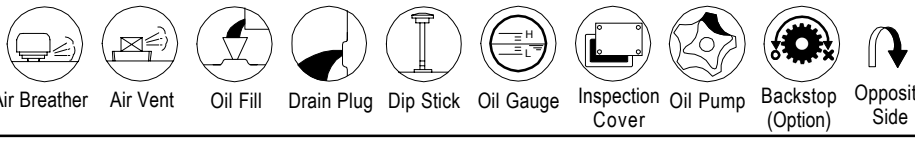

Air Breather, Air Vent, Oil Fill, Drain Plug, Dip Stick, Oil Gauge, Inspection Cover, Oil Pump, Backstop (Option), Opposite Side

Sumitomo Heavy Industries, Ltd.
http://www.shi.co.jp/ptc

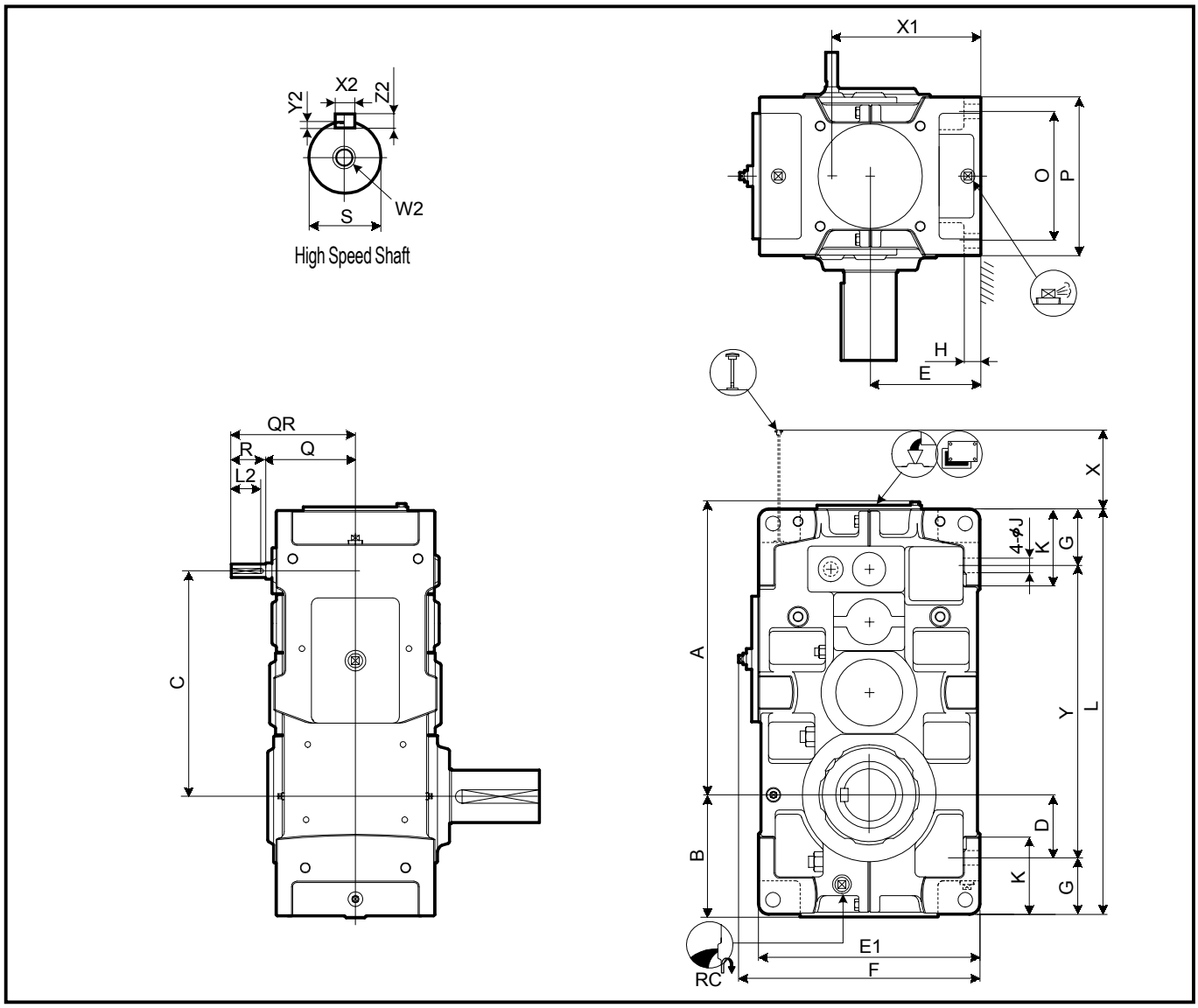

Size	A	B	C	D	E	E1	F	G	H	J	K	L	O	P	X	X1	Y
9060	702	291	540	151	265	530	577	135	35	35	180	970	310	380	73	357	700
9070	810	328	630	163	300	600	647	160	40	42	215	1115	350	430	67	409	795
9075	863	375	683	210	335	670	717	160	52	42	220	1215	350	430	67	444	895
9080	933	370	725	205	335	670	717	160	52	42	220	1275	380	460	93	461	955
9085	989	414	781	249	375	750	797	160	52	42	220	1375	380	460	93	501	1055

Size	High Speed Shaft									RC1	Wt.	Oil Qty.
	Q	QR	R	S	W2/Depth	Key						
						X2	Y2	Z2	L2		kg	L
9060	221	301	80	35k6	M12/28	10	5	8	70	1"	660	69
9070	244	354	110	40k6	M16/36	12	5	8	95	1"	950	108
9075	244	354	110	40k6	M16/36	12	5	8	95	1"	1170	122
9080	264	374	110	45k6	M16/36	14	5.5	9	95	1"	1360	130
9085	264	374	110	45k6	M16/36	14	5.5	9	95	1"	1620	175

Units:mm

1.Key and keyways are based on ISO R773-1969 Close keys(JIS B1301-1996 Parallel key in fastening type)
2.The oil quantity is approximate.Oil shall be supplied within the range shown on the oil gauge.
3. Refer to the page D - 15 for dimensions not shown in these drawings.
4. Refer to the page D - 29 for the dimension of optional parts.

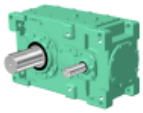

Slow Speed Shaft

Solid Shaft	Hollow Shaft (Shrink Disk Type)	Hollow Shaft (KeyType)
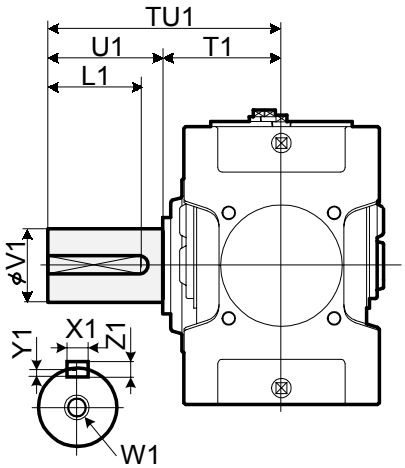	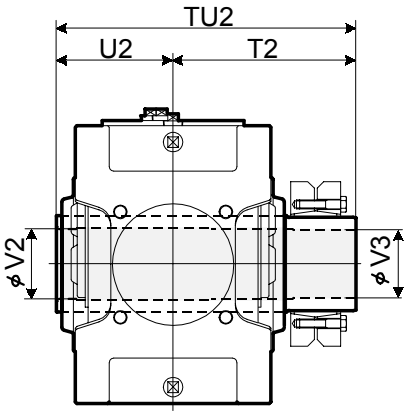 Refer to the page D-18 for details.	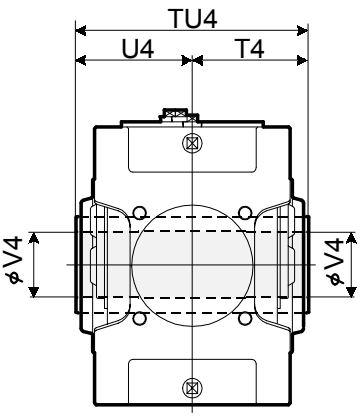 Refer to the page D -19 for details.

Size	Solid Shaft									Hollow Shaft (Shrink Disk Type)					Hollow Shaft (Key Type)			
	TU1	T1	U1	V1	W1/Depth	Key				TU2	T2	U2	V2	V3	TU4	T4	U4	V4
						X1	Y1	Z1	L1									
9060	440	230	210	125m6	M24/50	32	11	18	185	583	353	230	128	125	470	235	235	125
9070	509	259	250	145m6	M30/60	36	12	20	225	644	384	260	148	145	530	265	265	145
9075	562	262	300	160m6	M30/60	40	13	22	275	651	386	265	158	155	530	265	265	150
9080	582	282	300	165m6	M30/60	40	13	22	275	714	429	285	173	170	570	285	285	165
9085	585	285	300	175m6	M30/60	45	15	25	270	714	429	285	183	180	570	285	285	175

Units:mm

Standard Shaft Arrangement Configuration

RL	RR	RB	LR	LL	LB	BL	BR	BB
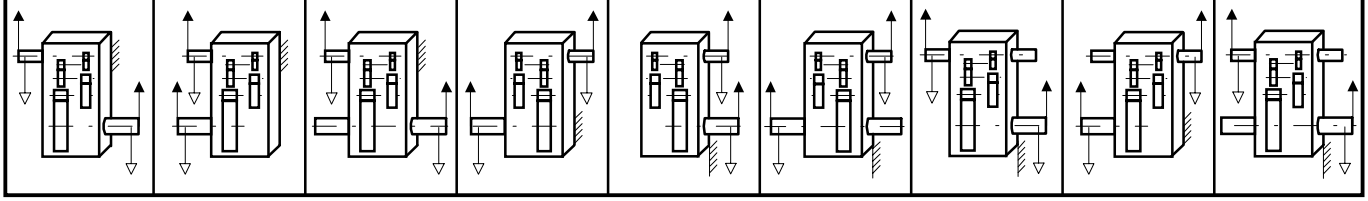								

Nomenclature

P W D [Size] P 4 W - [Shaft Arrangement] [Low Speed Shaft Type] - [Nominal Reduction Ratio]

Size: 9060, 9070, 9075, 9080, 9085

Shaft Arrangement: RL, RR, RB, LR, LL, LB, BL, BR, BB

Low Speed Shaft Type:
- (blank) : Solid Shaft
- T : Hollow shaft (Shrink Disk type)
- K : Hollow shaft (Key type)

Size	Nominal Reduction Ratio																
	80	90	100	112	125	140	160	180	200	224	250	280	315	355	400	450	500
9060	O	O	O	O	O	O	O	O	O	O	O	O	O	O	O		
9070	O	O	O	O	O	O	O	O	O	O	O	O	O	O	O		
9075			O	O	O	O	O	O	O	O	O	O	O	O	O	O	O
9080	O	O	O	O	O	O	O	O	O	O	O	O	O	O	O		
9085			O	O	O	O	O	O	O	O	O	O	O	O	O	O	O

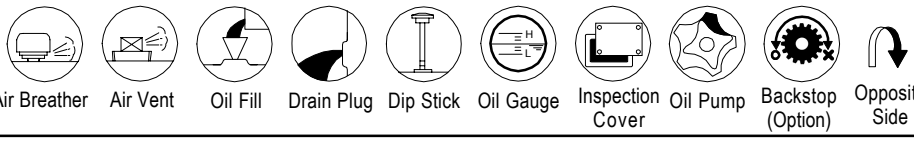

Air Breather | Air Vent | Oil Fill | Drain Plug | Dip Stick | Oil Gauge | Inspection Cover | Oil Pump | Backstop (Option) | Opposite Side

Sumitomo Heavy Industries, Ltd.
http://www.shi.co.jp/ptc

D

Technical Data

Lubricant and Installation ... D- 2
Painting Specifications and Rust Proof Standard ... D- 3
Moment of Inertia of Right Angle Shaft ... D- 4
GD^2 of Right Angle Shaft ... D- 6
Moment of Inertia of Parallel Shaft ... D- 8
GD^2 of Parallel Shaft ... D-10
Supplementary Dimension Drawing ... D-12
Supplementary Matters to Hollow Shaft ... D-17
Hollow Shaft Related Dimensions ... D-18
Cooling Fan Dimension ... D-20
Option Dimension ... D-24
Motor Terminal Box ... D-32
Motor Flange Dimension ... D-34

Lubricant

PARAMAX DRIVE is shipped without lubrication oil. Supply oil within the range shown on the dip stick before operation.
The table on the right shows appropriate viscosity of oil based on ISO and AGMA for respective ambient temperatures and slow speed shaft r/min.
When the ambient temperature is lower than -10 deg or higher than +50 deg, a heating or cooling unit is necessary, in general.

Slow Speed Shaft Speed		Ambient Temperature		
		-10 deg to +15 deg	0 deg to +30 deg	+10 deg to +50 deg
Over 100r/min	ISO* AGMA	VG68 2EP	VG150 4EP	VG220 5EP
Under 100r/min	ISO* AGMA	VG100 3EP	VG220 5EP	VG320 6EP

* Kinetic Viscosity (cSt) at ISO 40 deg.

Recommended Lubricants

	Brand	ARAL	BP	CASTROL	CHEVRON	ELF	ESSO	FINA	GULF	MOBIL	SHELL	SUNOCO	TEXACO	TOTAL	WINTER-SHALL
Gear Oil	ISO VG68 AGMA 2EP	DEGOL BG68	ENERGOL GR-XP-68	ALPHA SP68	NI GEAR COMPOUND 68	REDUCT ELF SP68	SPARTAN EP68	GIRAN 68	EP LUBRICANT HD68	MOBIL-GEAR 626	OMALA 68	SUNEP 1050 ISO68	MEROPA 68	CARTER EP68	WIOLAN IT68
Gear Oil	ISO VG100 AGMA 3EP	DEGOL BG100	ENERGOL GR-XP-100	ALPHA SP100	NI GEAR COMPOUND 100	REDUCT ELF SP100	SPARTAN EP100	GIRAN 100	EP LUBRICANT HD100	MOBIL-GEAR 627	OMALA 100	SUNEP 1055 ISO100	MEROPA 100	CARTER EP100N	WIOLAN IT100
Gear Oil	ISO VG150 AGMA 4EP	DEGOL BG150	ENERGOL GR-XP-150	ALPHA SP150	NI GEAR COMPOUND 150	REDUCT ELF SP150	SPARTAN EP150	GIRAN 150	EP LUBRICANT HD150	MOBIL-GEAR 629	OMALA 150	SUNEP 1060 ISO150	MEROPA 150	CARTER EP150N	WIOLAN IT150
Gear Oil	ISO VG220 AGMA 5EP	DEGOL BG220	ENERGOL GR-XP-220	ALPHA SP220	NI GEAR COMPOUND 220	REDUCT ELF SP220	SPARTAN EP220	GIRAN 220	EP LUBRICANT HD220	MOBIL-GEAR 630	OMALA 220	SUNEP 1070 ISO220	MEROPA 220	CARTER EP220N	WIOLAN IT220
Gear Oil	ISO VG320 AGMA 6EP	DEGOL BG320	ENERGOL GR-XP-320	ALPHA SP320	NI GEAR COMPOUND 320	REDUCT ELF SP320	SPARTAN EP320	GIRAN 320	EP LUBRICANT HD320	MOBIL-GEAR 632	OMALA 320	SUNEP 1090 ISO320	MEROPA 320	CARTER EP320N	WIOLAN IT320
Bearing grease		ARALUB HL3	ENER-GREASE LS EP2	SPHEEROL AP3	DURALITH GREASE 68	EPEXA 2	BEACON EP2	MARSON EPL3	GULF-CROWN EP2	MOBIL-PLEX 48	ALVANIA EP2	MULTI DUTY EP2	MUL-TIFAK EP2	MULTIS EP2	WIOLUB LKF2

Installation

(1) Consult us when PARAMAX DRIVE is to be installed on an inclined surface or on a ceiling.
Additional lubrication system may be necessary.
(2) Install PARAMAX DRIVE horizontally on a sufficiently rigid base.
When ths unit is made for inclined installation according to your specification, do not install it at any other angle other than the specified angle.
(3) Installation bolts for PARAMAX DRIVE shall be equivalent to JIS strength classification 10.9.
Consult us when the force that pushes up PARAMAX DRIVE is to be applied.
(4) Refer to the maintenunce manual attached to the unit for other installation notes.

Painting Specifications

Painting Area	Surface Conditioning	Kind of Painting		Painting Specification of				Application
		Class	Painting of Finish Coat	Type	Coating	Thickness μ	Type of Coating	
Outside Painting	Cast Iron Class 1	Standard painting	———	Under	1	20 - 40	Modified alkyd resin	Standard under coat
			Phalic acid	Finish	1	15 - 30	Alkyd resin paint	Standard finish coat
		Standard export painting	———	Under	2	40 - 80	Modified alkyd resin	Export standard
			Modified epoxy	Finish	1	15 - 30	Vinyl modified epoxy resin	
		Special painting (Including rust-proof and heat resisting painting) Onelayer of Unigrand PTC Primer as the first primer	Modified epoxy	Under	1	20 - 40	Vinyl modified epoxy resin	Moderate corrosive atomosphere, sea side, outdoorhumid atomosphere, chemical plant area, etc...
				Finish	2	30 - 60	Vinyl modified epoxy resin	
			Long oil phtalic	Under	2	40 - 80	Lead rust preventive paint	Ocean-going vessel & boat , bridge, seaside, outdoor humid atomosphere, etc...
				Finish	2	30 - 60	Synthetics resin paint	
			Chloride rubber	Under	2	40 - 80	Lead rust preventive paint	Ocean-going vessel & boat , bridge, seaside, outdoor humid atomosphere, etc...
				Second	1	20 - 40	Phenol M.I.O paint	
				Finish	2	30 - 60	Chloride rubber paint	
			Phenol	Under	2	40 - 80	Lead rust preventive paint	In-and-outdoor of acid treating plant and chemical plant etc...
				Finish	2	30 - 60	Phenol resin enamel	
			Heat-proof silver	Under	1	20 - 40	Lead rust preventive paint	Heating furnace (120 deg), etc...
				Finish	1	15 - 30	Aluminum paint	
	Steel Plate Class 2	Extra rust-proof painting	Epoxy	Under	2	40 - 80	Special permeability epoxy aluminium paint	Indoor anti-corrosion area, Chemical plant
				Finish	3	120 - 240	Polyamide epoxy	
			Polyurethane	Under	2	40 - 80	Special permeability epoxy aluminium paint	Outdoor anti-corrosion area, Chemical plant
				Finish	3	45 - 90	Polyisocianate urethane resin paint	
		Extra rust-proof painting (Sand blast under coating)	Thick film epoxy		5	250 - 350	Thick film type modified epoxy resin paint	Submersible equipment, marine structure, etc...
Inside Painting	Cast Iron Class 1 Steel Plate Class 3	Standard painting			1	20-40	Modified alkyd resin	Standard inside painting

Note : SUMITOMO standard color is Mansel #5G 6/4.5

Rust Proof Standard

Rust proofing treatment has been conducted on all completely assembled models, prior to shipment.

1. Standard rust proofing specifications

(1) Outside rust proofing

Rust proofing oil has been applied to products before shipment.
Check the rust proofing conditions every 6 months after shipment,
and conduct rust proofing treatment, as necessary.

Rust proofing period	6 months
Storage condition	Generally to be stored inside the shop or warehouse, relatively free of humidity, dust, extreme temperature fluctuation, corrosive gas, and similar atomosphere. After shipment, the product shall be operated 5-10 munites every 2-3 months with recommended lubricants.

2. Export rust proofing specifications

Consult us for export rust proofing when export specifications or severe specifications sre required.

Moment of Inertia : Right Angle Shaft Double Reduction

Nominal reduction ratio	Size of Reducer												
	9015	**9025**	**9030**	**9035**	**9040**	**9050**	**9055**	**9060**	**9070**	**9075**	**9080**	**9085**	**9090**
6.3	0.00423	0.00805	0.0157		0.0333	0.0662		0.146	0.301		0.502		
7.1	0.00400	0.00750	0.0153		0.0313	0.0621		0.135	0.281		0.475		
8	0.00288	0.00508	0.0137	0.0181	0.0283	0.0603	0.0745	0.130	0.253	0.337	0.480	0.562	
9	0.00275	0.00475	0.0134	0.0175	0.0269	0.0577	0.0681	0.124	0.242	0.311	0.464	0.524	
10	0.00218	0.00488	0.0111	0.0152	0.0201	0.0492	0.0653	0.0981	0.203	0.274	0.398	0.516	
11.2	0.00210	0.00468	0.0109	0.0149	0.0193	0.0475	0.0614	0.0939	0.196	0.259	0.387	0.493	
12.5	0.00188	0.00390	0.00843	0.0120	0.0138	0.0357	0.0525	0.0691	0.139	0.216	0.268	0.422	
14	0.00183	0.00375	0.00830	0.0118	0.0133	0.0345	0.0499	0.0664	0.135	0.207	0.261	0.407	
16	0.00133	0.00258	0.00583	0.00908	0.0107	0.0243	0.0379	0.0514	0.102	0.147	0.194	0.282	
18	0.00130	0.00250	0.00575	0.00890	0.0104	0.0237	0.0362	0.0497	0.0987	0.141	0.190	0.273	
20				0.00620			0.0257			0.107		0.203	
22.4				0.00610			0.0246			0.103		0.198	

Moment of Inertia : Right Angle Shaft Triple Reduction

Nominal reduction ratio	Size of Reducer												
	9015	**9025**	**9030**	**9035**	**9040**	**9050**	**9055**	**9060**	**9070**	**9075**	**9080**	**9085**	**9090**
20			0.00378		0.00693	0.0140		0.0289	0.0590		0.121		0.240
22.4			0.00373		0.00670	0.0136		0.0278	0.0571		0.118		0.237
25			0.00338	0.00403	0.00608	0.0115	0.0149	0.0237	0.0515	0.0624	0.106	0.126	0.212
28			0.00333	0.00395	0.00595	0.0112	0.0142	0.0230	0.0503	0.0600	0.104	0.123	0.210
31.5			0.00193	0.00353	0.00433	0.00835	0.0120	0.0183	0.0359	0.0537	0.0700	0.110	0.141
35.5			0.00190	0.00350	0.00425	0.00818	0.0116	0.0178	0.0351	0.0521	0.0689	0.108	0.140
40			0.00178	0.00203	0.00403	0.00738	0.00868	0.0161	0.0328	0.0373	0.0644	0.0722	0.129
45			0.00175	0.00200	0.00398	0.00730	0.00843	0.0159	0.0323	0.0363	0.0636	0.0708	0.129
50			0.00118	0.00183	0.00233	0.00555	0.00758	0.0120	0.0239	0.0337	0.0484	0.0659	0.0931
56			0.00115	0.00183	0.00230	0.00550	0.00743	0.0118	0.0236	0.0331	0.0479	0.0649	0.0927
63			0.00110	0.00120	0.00220	0.00423	0.00568	0.00893	0.0173	0.0245	0.0349	0.0493	0.0664
71			0.00110	0.00120	0.00218	0.00418	0.00558	0.00883	0.0171	0.0241	0.0346	0.0487	0.0661
80				0.00113			0.00430			0.0176		0.0355	0.0642
90				0.00113			0.00423			0.0174		0.0351	
100													

Moment of Inertia : Right Angle Shaft Quadruple Reduction

Nominal reduction ratio	Size of Reducer												
	9015	**9025**	**9030**	**9035**	**9040**	**9050**	**9055**	**9060**	**9070**	**9075**	**9080**	**9085**	**9090**
63													
71													
80					0.00295	0.00283		0.00553	0.0113		0.0229		
90					0.00293	0.00280		0.00548	0.0112		0.0227		0.0467
100					0.00215	0.00268		0.00523	0.0108	0.0115	0.0219	0.0233	0.0452
112					0.00215	0.00265	0.00283	0.00518	0.0107	0.0114	0.0218	0.0230	0.0451
125					0.00203	0.00243	0.00270	0.00473	0.00923	0.0110	0.0188	0.0222	0.0409
140					0.00203	0.00243	0.00268	0.00470	0.00918	0.0109	0.0188	0.0220	0.0408
160						0.00120	0.00245	0.00243	0.00480	0.00930	0.00993	0.0190	0.0243
180						0.00120	0.00243	0.00240	0.00478	0.00925	0.00990	0.0189	0.0242
200						0.00118	0.00123	0.00235	0.00468		0.00970	0.0100	0.0183
224						0.00118	0.00120	0.00233	0.00465	0.00483	0.00968	0.0100	0.0183
250						0.00110	0.00118	0.00223	0.00428	0.00473	0.00893	0.00978	0.0172
280						0.00110	0.00118	0.00220	0.00425	0.00470	0.00893	0.00973	0.0172
315						0.00110	0.00113	0.00220	0.00420	0.00430	0.00885	0.00898	0.0171
355						0.00108	0.00110	0.00215	0.00418	0.00428	0.00868	0.00895	0.0163
400							0.00110			0.00423		0.00885	
450							0.00108			0.00418		0.00868	
500													

Unit : kg m²

Size of Reducer											Nominal reduction ratio
9095	**9100**	**9105**	**9110**	**9115**	**9118**	**9121**	**9128**	**9131**	**9131**	**9136**	
											6.3
											7.1
											8
1.18		2.23		4.16							**9**
1.16		2.20		3.98							**10**
0.871		1.68		3.10							**11.2**
0.858		1.65		2.99							**12.5**
0.638		1.22		2.28							**14**
0.630		1.20		2.21							**16**
0.464		0.894		1.68							**18**
0.459		0.884		1.63							**20**
											22.4

Unit : kg m²

Size of Reducer											Nominal reduction ratio
9095	**9100**	**9105**	**9110**	**9115**	**9118**	**9121**	**9128**	**9131**	**9131**	**9136**	
	0.460		0.889								**20**
0.249	0.453	0.476	0.866	0.926							**22.4**
0.245	0.401	0.470	0.774	0.896	0.959						**25**
0.218	0.397	0.412	0.759	0.798		2.18	2.21		4.48	4.53	**28**
0.215	0.264	0.408	0.454	0.779	0.701	2.12	2.15		4.24	4.28	**31.5**
0.144	0.262	0.271	0.445	0.468	0.731	1.29	1.31	2.39	3.31	3.34	**35.5**
0.143	0.241	0.268	0.409	0.456	0.615	1.25	1.27	2.33	3.16	3.18	**40**
0.132	0.239	0.245	0.403	0.418	0.559	0.939	0.952	1.78	2.41	2.43	**45**
0.131	0.175	0.244	0.311	0.411	0.443	0.917	0.928	1.74	2.32	2.33	**50**
0.0945	0.174	0.178	0.307	0.317	0.408	0.683	0.691	1.28	1.76	1.77	**56**
0.0940	0.127	0.177	0.225	0.312	0.322	0.668	0.675	1.26	1.70	1.71	**63**
0.0673	0.126	0.129	0.223	0.229	0.300	0.509	0.515	0.934			**71**
0.0669	0.121	0.128	0.211	0.226	0.232	0.500	0.505	0.919			**80**
0.0648		0.123		0.214	0.218						**90**
											100

Unit : kg m²

Size of Reducer											Nominal reduction ratio
9095	**9100**	**9105**	**9110**	**9115**	**9118**	**9121**	**9128**	**9131**	**9131**	**9136**	
											63
									0.979	0.987	**71**
									0.819	0.825	**80**
	0.0962		0.108			0.235	0.238	0.502	0.713	0.718	**90**
0.0472	0.0930	0.0972	0.102	0.110	0.139	0.230	0.233	0.492	0.688	0.692	**100**
0.0455	0.0927	0.0937	0.101	0.104	0.123	0.199	0.201	0.429	0.505	0.508	**112**
0.0454	0.0846	0.0934	0.0908	0.102	0.105	0.196	0.198	0.423	0.489	0.492	**125**
0.0411	0.0844	0.0850	0.0902	0.0918	0.100	0.152	0.154	0.281	0.448	0.450	**140**
0.0410	0.0493	0.0849	0.0527	0.0910	0.0927	0.150	0.151	0.277	0.438	0.439	**160**
0.0244	0.0492	0.0496	0.0523	0.0533	0.0890	0.137	0.138	0.252	0.326	0.327	**180**
0.0244	0.0370	0.0495	0.0393	0.0528	0.0693	0.136	0.136	0.250	0.319	0.320	**200**
0.0184	0.0369	0.0371	0.0391	0.0397	0.0544	0.0978	0.0983	0.143	0.234	0.235	**224**
0.0183	0.0349	0.0371	0.0364	0.0394	0.0516	0.0969	0.0974	0.141	0.230	0.231	**250**
0.0172	0.0348	0.0350	0.0363	0.0367	0.0501	0.0693	0.0696	0.131	0.217	0.217	**280**
0.0172	0.0345	0.0350	0.0355	0.0365	0.0477	0.0688	0.0690	0.130			**315**
0.0171	0.0334	0.0346	0.0341	0.0357	0.0360	0.0664	0.0667	0.125			**355**
0.0164		0.0334		0.0343	0.0345						**400**
											450
											500

GD² : Right Angle Shaft Double Reduction

Nominal reduction ratio	Size of Reducer												
	9015	9025	9030	9035	9040	9050	9055	9060	9070	9075	9080	9085	9090
6.3	0.0169	0.0322	0.0629		0.133	0.265		0.584	1.20		2.01		
7.1	0.0160	0.0300	0.0610		0.125	0.248		0.541	1.13		1.90		
8	0.0115	0.0203	0.0548	0.0723	0.113	0.241	0.298	0.522	1.01	1.35	1.92	2.25	
9	0.0110	0.0190	0.0536	0.0699	0.108	0.231	0.272	0.495	0.968	1.24	1.86	2.10	
10	0.0087	0.0195	0.0443	0.0609	0.0805	0.197	0.261	0.392	0.812	1.10	1.59	2.06	
11.2	0.0084	0.0187	0.0436	0.0594	0.0772	0.190	0.246	0.376	0.783	1.04	1.55	1.97	
12.5	0.0075	0.0156	0.0337	0.0481	0.0553	0.143	0.210	0.276	0.556	0.865	1.07	1.69	
14	0.0073	0.0150	0.0332	0.0472	0.0532	0.138	0.200	0.266	0.538	0.827	1.04	1.63	
16	0.0053	0.0103	0.0233	0.0363	0.0428	0.0972	0.152	0.206	0.407	0.590	0.777	1.13	
18	0.0052	0.0100	0.0230	0.0356	0.0414	0.0946	0.145	0.199	0.395	0.566	0.759	1.09	
20				0.0248			0.103			0.429		0.814	
22.4				0.0244			0.0985			0.413		0.790	

GD² : Right Angle Shaft Triple Reduction

Nominal reduction ratio	Size of Reducer												
	9015	9025	9030	9035	9040	9050	9055	9060	9070	9075	9080	9085	9090
20			0.0151		0.0277	0.0559		0.116	0.236		0.482		0.960
22.4			0.0149		0.0268	0.0542		0.111	0.229		0.471		0.949
25			0.0135	0.0161	0.0243	0.0459	0.0594	0.0946	0.206	0.250	0.425	0.505	0.848
28			0.0133	0.0158	0.0238	0.0449	0.0567	0.0919	0.201	0.240	0.418	0.491	0.842
31.5			0.0077	0.0141	0.0173	0.0334	0.0479	0.0730	0.144	0.215	0.280	0.440	0.563
35.5			0.0076	0.0140	0.0170	0.0327	0.0464	0.0712	0.141	0.208	0.276	0.431	0.559
40			0.0071	0.0081	0.0161	0.0295	0.0347	0.0645	0.131	0.149	0.257	0.289	0.518
45			0.0070	0.0080	0.0159	0.0292	0.0337	0.0635	0.129	0.145	0.255	0.283	0.515
50			0.0047	0.0073	0.0093	0.0222	0.0303	0.0480	0.0957	0.135	0.193	0.264	0.372
56			0.0046	0.0073	0.0092	0.0220	0.0297	0.0473	0.0945	0.132	0.192	0.260	0.371
63			0.0044	0.0048	0.0088	0.0169	0.0227	0.0357	0.0690	0.0979	0.140	0.197	0.266
71			0.0044	0.0048	0.0087	0.0167	0.0223	0.0353	0.0682	0.0963	0.139	0.195	0.265
80				0.0045			0.0172			0.0704		0.142	0.257
90				0.0045			0.0169			0.0694		0.141	
100													

GD² : Right Angle Shaft Quadruple Reduction

Nominal reduction ratio	Size of Reducer												
	9015	9025	9030	9035	9040	9050	9055	9060	9070	9075	9080	9085	9090
63													
71													
80					0.0118	0.0113		0.0221	0.0452		0.0914		
90					0.0117	0.0112		0.0219	0.0447		0.0907		0.187
100					0.0086	0.0107	0.0115	0.0209	0.0432	0.0461	0.0877	0.0930	0.181
112					0.0086	0.0106	0.0113	0.0207	0.0429	0.0455	0.0872	0.0920	0.180
125					0.0081	0.0097	0.0108	0.0189	0.0369	0.0438	0.0753	0.0887	0.163
140					0.0081	0.0097	0.0107	0.0188	0.0367	0.0434	0.0751	0.0881	0.163
160						0.0048	0.0098	0.0097	0.0192	0.0372	0.0397	0.0759	0.0970
180						0.0048	0.0097	0.0096	0.0191	0.0370	0.0396	0.0756	0.0969
200						0.0047	0.0049	0.0094	0.0187	0.0195	0.0388	0.0401	0.0731
224						0.0047	0.0048	0.0093	0.0186	0.0193	0.0387	0.0399	0.0730
250						0.0044	0.0047	0.0089	0.0171	0.0189	0.0357	0.0391	0.0687
280						0.0044	0.0047	0.0088	0.0170	0.0188	0.0357	0.0389	0.0687
315						0.0044	0.0045	0.0088	0.0168	0.0172	0.0354	0.0359	0.0682
355						0.0043	0.0044	0.0086	0.0167	0.0171	0.0347	0.0358	0.0653
400							0.0044			0.0169		0.0354	
450							0.0043			0.0167		0.0347	
500													

Unit : kgf m²

Size of Reducer											Nominal reduction ratio
9095	**9100**	**9105**	**9110**	**9115**	**9118**	**9121**	**9128**	**9131**	**9131**	**9136**	
											6.3
											7.1
											8
4.72		8.94		16.6							**9**
4.63		8.78		15.9							**10**
3.48		6.70		12.4							**11.2**
3.43		6.61		12.0							**12.5**
2.55		4.88		9.14							**14**
2.52		4.82		8.85							**16**
1.86		3.57		6.71							**18**
1.84		3.54		6.53							**20**
											22.4

Unit : kgf m²

Size of Reducer											Nominal reduction ratio
9095	**9100**	**9105**	**9110**	**9115**	**9118**	**9121**	**9128**	**9131**	**9131**	**9136**	
	1.84		3.56								**20**
0.994	1.81	1.91	3.47	3.70							**22.4**
0.981	1.60	1.88	3.10	3.59	3.84						**25**
0.870	1.59	1.65	3.04	3.19		8.71	8.84		17.9	18.1	**28**
0.862	1.06	1.63	1.81	3.12	2.80	8.48	8.59		17.0	17.1	**31.5**
0.578	1.05	1.08	1.78	1.87	2.92	5.16	5.24	9.58	13.2	13.4	**35.5**
0.572	0.964	1.07	1.64	1.83	2.46	5.01	5.08	9.34	12.6	12.7	**40**
0.527	0.958	0.982	1.61	1.67	2.24	3.76	3.81	7.10	9.65	9.73	**45**
0.523	0.699	0.975	1.24	1.64	1.77	3.67	3.71	6.95	9.27	9.33	**50**
0.378	0.695	0.710	1.23	1.27	1.63	2.73	2.76	5.13	7.04	7.09	**56**
0.760	0.507	0.706	0.900	1.25	1.29	2.67	2.70	5.03	6.79	6.83	**63**
0.269	0.505	0.514	0.890	0.915	1.20	2.04	2.06	3.73			**71**
0.268	0.485	0.512	0.845	0.903	0.928	2.00	2.02	3.67			**80**
0.259		0.491		0.854	0.872						**90**
											100

Unit : kgf m²

Size of Reducer											Nominal reduction ratio
9095	**9100**	**9105**	**9110**	**9115**	**9118**	**9121**	**9128**	**9131**	**9131**	**9136**	
											63
									3.91	3.95	**71**
									3.28	3.30	**80**
	0.385		0.431			0.941	0.954	2.01	2.85	2.87	**90**
0.189	0.372	0.389	0.409	0.439	0.554	0.920	0.930	1.97	2.75	2.77	**100**
0.182	0.371	0.375	0.405	0.415	0.490	0.797	0.805	1.72	2.02	2.03	**112**
0.182	0.338	0.374	0.363	0.410	0.420	0.784	0.790	1.69	1.96	1.97	**125**
0.164	0.338	0.340	0.361	0.367	0.398	0.609	0.614	1.12	1.79	1.80	**140**
0.164	0.197	0.339	0.211	0.364	0.371	0.600	0.605	1.11	1.75	1.76	**160**
0.0976	0.197	0.198	0.209	0.213	0.356	0.548	0.552	1.01	1.30	1.31	**180**
0.0974	0.148	0.198	0.157	0.211	0.277	0.542	0.545	0.998	1.28	1.28	**200**
0.0734	0.148	0.149	0.156	0.159	0.217	0.391	0.393	0.571	0.936	0.940	**224**
0.0733	0.140	0.148	0.146	0.157	0.206	0.388	0.389	0.565	0.920	0.923	**250**
0.0689	0.139	0.140	0.145	0.147	0.200	0.277	0.279	0.525	0.867	0.868	**280**
0.0689	0.138	0.140	0.142	0.146	0.191	0.275	0.276	0.521			**315**
0.0683	0.133	0.138	0.137	0.143	0.144	0.266	0.267	0.498			**355**
0.0654		0.134		0.137	0.138						**400**
											450
											500

Moment of Inertia : Parallel Shaft Double Reduction

Nominal reduction ratio	Size of Reducer												
	9015	9025	9030	9035	9040	9050	9055	9060	9070	9075	9080	9085	9090
6.3	0.00238	0.00508	0.0110		0.0211	0.0416		0.109	0.226		0.447		0.865
7.1	0.00215	0.00455	0.0105		0.0188	0.0376		0.0977	0.207		0.420		0.840
8	0.00185	0.00433	0.00913	0.0135	0.0158	0.0336	0.0496	0.0787	0.167	0.262	0.326	0.502	0.693
9	0.00170	0.00398	0.00880	0.0129	0.0144	0.0309	0.0434	0.0721	0.155	0.236	0.309	0.466	0.675
10	0.00133	0.00305	0.00718	0.0107	0.0136	0.0267	0.0389	0.0619	0.132	0.188	0.256	0.360	0.490
11.2	0.00125	0.00283	0.00698	0.0103	0.0126	0.0251	0.0348	0.0576	0.124	0.173	0.245	0.337	0.480
12.5	0.00100	0.00218	0.00463	0.00820	0.00933	0.0210	0.0300	0.0443	0.0898	0.147	0.165	0.279	0.323
14	0.00095	0.00205	0.00450	0.00795	0.00878	0.0200	0.0275	0.0415	0.0851	0.136	0.158	0.264	0.318
16	0.00078	0.00173	0.00365	0.00523	0.00725	0.0149	0.0232	0.0312	0.0708	0.0984	0.129	0.179	0.253
18	0.00073	0.00163	0.00355	0.00508	0.00690	0.0142	0.0215	0.0296	0.0678	0.0922	0.124	0.169	0.250
20				0.00403			0.0161			0.0764		0.138	
22.4				0.00393			0.0151			0.0724		0.132	

Moment of Inertia : Parallel Shaft Triple Reduction

Nominal reduction ratio	Size of Reducer												
	9015	9025	9030	9035	9040	9050	9055	9060	9070	9075	9080	9085	9090
20	0.00085	0.00210	0.00288		0.00558	0.0135		0.0303	0.0588		0.121		0.239
22.4	0.00083	0.00205	0.00280		0.00538	0.0131		0.0291	0.0570		0.118		0.237
25	0.00073	0.00190	0.00248	0.00310	0.00478	0.0109	0.0144	0.0249	0.0514	0.0622	0.106	0.127	0.212
28	0.00073	0.00188	0.00245	0.00305	0.00463	0.0107	0.0137	0.0242	0.0502	0.0598	0.104	0.123	0.210
31.5	0.00048	0.00115	0.00153	0.00263	0.00335	0.00763	0.0115	0.0164	0.0317	0.0536	0.0690	0.110	0.139
35.5	0.00048	0.00115	0.00153	0.00260	0.00328	0.00743	0.0111	0.0159	0.0309	0.0520	0.0679	0.108	0.138
40	0.00043	0.00108	0.00138	0.00163	0.00303	0.00658	0.00798	0.0142	0.0287	0.0331	0.0632	0.0714	0.128
45	0.00043	0.00108	0.00138	0.00160	0.00298	0.00648	0.00770	0.0140	0.0282	0.0321	0.0624	0.0699	0.127
50			0.00090	0.00145	0.00190	0.00433	0.00680	0.00868	0.0175	0.0296	0.0347	0.0648	0.0695
56			0.00088	0.00143	0.00188	0.00425	0.00663	0.00850	0.0172	0.0289	0.0343	0.0637	0.0693
63			0.00083	0.00093	0.00178	0.00393	0.00448	0.00788	0.0164	0.0180	0.0325	0.0356	0.0653
71			0.00083	0.00093	0.00175	0.00390	0.00435	0.00778	0.0162	0.0177	0.0323	0.0350	0.0650
80				0.00085			0.00400			0.0167		0.0331	0.0630
90				0.00085			0.00395			0.0165		0.0328	

Moment of Inertia : Parallel Shaft Quadruple Reduction

Nominal reduction ratio	Size of Reducer												
	9015	9025	9030	9035	9040	9050	9055	9060	9070	9075	9080	9085	9090
63													
71													
80			0.00078		0.00200	0.00278		0.00618	0.0124		0.0248		
90			0.00078		0.00200	0.00275		0.00610	0.0123		0.0246		0.0675
100			0.00075	0.00080	0.00195	0.00263	0.00283	0.00585	0.0119	0.0126	0.0238	0.0252	0.0658
112			0.00075	0.00078	0.00195	0.00260	0.00278	0.00580	0.0118	0.0125	0.0237	0.0249	0.0658
125			0.00068	0.00075	0.00183	0.00238	0.00265	0.00533	0.0103	0.0121	0.0207	0.0241	0.0613
140			0.00068	0.00075	0.00183	0.00238	0.00263	0.00530	0.0103	0.0120	0.0207	0.0239	0.0613
160			0.00043	0.00068	0.00110	0.00103	0.00240	0.00220	0.00493	0.0104	0.00883	0.0209	0.0193
180			0.00043	0.00068	0.00110	0.00103	0.00238	0.00218	0.00490	0.0104	0.00878	0.0208	0.0193
200			0.00040	0.00043	0.00105	0.00098	0.00105	0.00213	0.00480	0.00498	0.00860	0.00893	0.0189
224			0.00040	0.00043	0.00105	0.00098	0.00103	0.00210	0.00478	0.00495	0.00858	0.00888	0.0189
250				0.00040		0.00093	0.00100	0.00200	0.00440	0.00483	0.00783	0.00865	0.0178
280				0.00040		0.00093	0.00100	0.00198	0.00438	0.00480	0.00780	0.00863	0.0178
315						0.00093	0.00093	0.00198	0.00433	0.00440	0.00773	0.00785	0.0177
355						0.00088	0.00093	0.00193	0.00430	0.00440	0.00755	0.00783	0.0170
400						0.00080	0.00093	0.00163	0.00353	0.00435	0.00685	0.00775	0.0156
450							0.00090			0.00430		0.00758	
500							0.00080			0.00353		0.00685	

Unit : kg m²

Size of Reducer											Nominal reduction ratio
9095	**9100**	**9105**	**9110**	**9115**	**9118**	**9121**	**9128**	**9131**	**9131**	**9136**	
	1.78		3.33								**6.3**
0.950	1.72	1.95	3.10	3.70							**7.1**
0.918	1.32	1.89	2.48	3.40							**8**
0.748	1.28	1.42	2.34	2.70							**9**
0.725	1.02	1.39	1.91	2.53							**10**
0.523	0.990	1.09	1.81	2.05							**11.2**
0.510	0.658	1.06	1.29	1.94							**12.5**
0.345	0.640	0.700	1.23	1.38							**14**
0.338	0.510	0.683	1.01	1.31							**16**
0.268	0.500	0.538	0.968	1.06							**18**
0.263		0.528		1.02							**20**
											22.4

Unit : kg m²

Size of Reducer											Nominal reduction ratio
9095	**9100**	**9105**	**9110**	**9115**	**9118**	**9121**	**9126**	**9128**	**9131**	**9136**	
	0.508		0.720								**20**
0.248	0.500	0.523	0.698	0.755					4.58	4.66	**22.4**
0.245	0.450	0.518	0.610	0.728	0.787				4.19	4.25	**25**
0.217	0.445	0.460	0.595	0.633		1.20	1.23	2.34	3.36	3.41	**28**
0.215	0.300	0.458	0.398	0.615	0.654	1.15	1.17	2.24	3.13	3.16	**31.5**
0.143	0.298	0.308	0.388	0.413	0.567	0.941	0.962	1.72	2.32	2.35	**35.5**
0.142	0.275	0.305	0.350	0.400	0.426	0.906	0.923	1.65	2.16	2.18	**40**
0.130	0.275	0.280	0.345	0.360	0.418	0.630	0.643	1.14	1.73	1.75	**45**
0.129	0.138	0.278	0.178	0.353	0.370	0.609	0.619	1.10	1.63	1.65	**50**
0.0710	0.137	0.141	0.174	0.184	0.333	0.486	0.494	0.810	1.34	1.36	**56**
0.0705	0.128	0.140	0.159	0.179	0.216	0.473	0.479	0.786	1.28	1.29	**63**
0.0660	0.127	0.130	0.157	0.163	0.194	0.367	0.372	0.626	1.02	1.03	**71**
0.0658	0.122	0.129	0.145	0.160	0.166	0.358	0.362	0.610			**80**
0.0638		0.124		0.147	0.152	0.309	0.312	0.491			**90**

Unit : kg m²

Size of Reducer											Nominal reduction ratio
9095	**9100**	**9105**	**9110**	**9115**	**9118**	**9121**	**9126**	**9128**	**9131**	**9136**	
											63
											71
									0.713	0.719	**80**
	0.108		0.123						0.611	0.616	**90**
0.0680	0.105	0.109	0.118	0.125	0.147	0.250	0.253	0.517	0.588	0.592	**100**
0.0663	0.105	0.106	0.117	0.119	0.138	0.221	0.223	0.447	0.525	0.528	**112**
0.0660	0.0963	0.105	0.106	0.118	0.121	0.218	0.219	0.441	0.469	0.471	**125**
0.0615	0.0963	0.0968	0.106	0.107	0.115	0.199	0.200	0.291	0.368	0.371	**140**
0.0615	0.0398	0.0965	0.0678	0.107	0.108	0.189	0.190	0.287	0.331	0.332	**160**
0.0194	0.0395	0.0400	0.0673	0.0683	0.105	0.164	0.165	0.261	0.260	0.261	**180**
0.0194	0.0388	0.0398	0.0425	0.0678	0.0688	0.158	0.159	0.258	0.237	0.238	**200**
0.0190	0.0388	0.0390	0.0423	0.0428	0.0665	0.113	0.114	0.158	0.232	0.233	**224**
0.0189	0.0368	0.0390	0.0398	0.0425	0.0431	0.110	0.110	0.156	0.171	0.172	**250**
0.0179	0.0368	0.0370	0.0395	0.0400	0.0621	0.0830	0.0833	0.146	0.168	0.169	**280**
0.0179	0.0365	0.0368	0.0388	0.0398	0.0597	0.0805	0.0808	0.145	0.141	0.141	**315**
0.0177	0.0353	0.0365	0.0375	0.0390	0.0392	0.0801	0.0803	0.112			**355**
0.0170	0.0295	0.0355	0.0313	0.0375	0.0378	0.0626	0.0628	0.111			**400**
0.0156		0.0295		0.0313	0.0315						**450**
											500

GD²: Parallel Shaft Double Reduction

Nominal reduction ratio	Size of Reducer												
	9015	**9025**	**9030**	**9035**	**9040**	**9050**	**9055**	**9060**	**9070**	**9075**	**9080**	**9085**	**9090**
6.3	0.0095	0.0203	0.0440		0.0845	0.166		0.434	0.906		1.79		3.46
7.1	0.0086	0.0182	0.0419		0.0753	0.150		0.391	0.830		1.68		3.36
8	0.0074	0.0173	0.0365	0.0541	0.0633	0.134	0.199	0.315	0.666	1.05	1.30	2.01	2.77
9	0.0068	0.0159	0.0352	0.0515	0.0577	0.124	0.174	0.288	0.620	0.946	1.24	1.86	2.70
10	0.0053	0.0122	0.0287	0.0426	0.0542	0.107	0.156	0.248	0.529	0.751	1.02	1.44	1.96
11.2	0.0050	0.0113	0.0279	0.0410	0.0505	0.100	0.139	0.230	0.497	0.690	0.978	1.35	1.92
12.5	0.0040	0.0087	0.0185	0.0328	0.0373	0.0841	0.120	0.177	0.359	0.587	0.658	1.12	1.29
14	0.0038	0.0082	0.0180	0.0318	0.0351	0.0798	0.110	0.166	0.340	0.545	0.631	1.06	1.27
16	0.0031	0.0069	0.0146	0.0209	0.0290	0.0594	0.0926	0.125	0.283	0.394	0.514	0.714	1.01
18	0.0029	0.0065	0.0142	0.0203	0.0276	0.0569	0.0860	0.119	0.271	0.369	0.496	0.678	0.998
20				0.0161			0.0643			0.305		0.552	
22.4				0.0157			0.0605			0.290		0.527	

GD²: Parallel Shaft Triple Reduction

Nominal reduction ratio	Size of Reducer												
	9015	**9025**	**9030**	**9035**	**9040**	**9050**	**9055**	**9060**	**9070**	**9075**	**9080**	**9085**	**9090**
20	0.0034	0.0084	0.0115		0.0223	0.0539		0.121	0.235		0.483		0.957
22.4	0.0033	0.0082	0.0112		0.0215	0.0522		0.117	0.228		0.472		0.946
25	0.0029	0.0076	0.0099	0.0124	0.0191	0.0437	0.0574	0.0996	0.206	0.249	0.425	0.507	0.846
28	0.0029	0.0075	0.0098	0.0122	0.0185	0.0427	0.0547	0.0969	0.201	0.239	0.418	0.492	0.839
31.5	0.0019	0.0046	0.0061	0.0105	0.0134	0.0305	0.0458	0.0655	0.127	0.214	0.276	0.441	0.557
35.5	0.0019	0.0046	0.0061	0.0104	0.0131	0.0297	0.0442	0.0637	0.124	0.208	0.272	0.431	0.553
40	0.0017	0.0043	0.0055	0.0065	0.0121	0.0263	0.0319	0.0568	0.115	0.132	0.253	0.285	0.510
45	0.0017	0.0043	0.0055	0.0064	0.0119	0.0259	0.0308	0.0558	0.113	0.128	0.250	0.279	0.508
50			0.0036	0.0058	0.0076	0.0173	0.0272	0.0347	0.0700	0.118	0.139	0.259	0.278
56			0.0035	0.0057	0.0075	0.0170	0.0265	0.0340	0.0689	0.116	0.137	0.255	0.277
63			0.0033	0.0037	0.0071	0.0157	0.0179	0.0315	0.0655	0.0721	0.130	0.142	0.261
71			0.0033	0.0037	0.0070	0.0156	0.0174	0.0311	0.0647	0.0706	0.129	0.140	0.260
80				0.0034			0.0160			0.0668		0.133	0.252
90				0.0034			0.0158			0.0659		0.131	

GD²: Parallel Shaft Quadruple Reduction

Nominal reduction ratio	Size of Reducer												
	9015	**9025**	**9030**	**9035**	**9040**	**9050**	**9055**	**9060**	**9070**	**9075**	**9080**	**9085**	**9090**
63													
71													
80			0.0031		0.0080	0.0111		0.0247	0.0496		0.0990		
90			0.0031		0.0080	0.0110		0.0244	0.0491		0.0983		0.270
100			0.0030	0.0032	0.0078	0.0105	0.0113	0.0234	0.0476	0.0505	0.0953	0.101	0.263
112			0.0030	0.0031	0.0078	0.0104	0.0111	0.0232	0.0473	0.0499	0.0948	0.0996	0.263
125			0.0027	0.0030	0.0073	0.0095	0.0106	0.0213	0.0413	0.0482	0.0829	0.0963	0.245
140			0.0027	0.0030	0.0073	0.0095	0.0105	0.0212	0.0411	0.0478	0.0827	0.0957	0.245
160			0.0017	0.0027	0.0044	0.0041	0.0096	0.0088	0.0197	0.0416	0.0353	0.0835	0.0771
180			0.0017	0.0027	0.0044	0.0041	0.0095	0.0087	0.0196	0.0414	0.0351	0.0832	0.0770
200			0.0016	0.0017	0.0042	0.0039	0.0042	0.0085	0.0192	0.0199	0.0344	0.0357	0.0755
224			0.0016	0.0017	0.0042	0.0039	0.0041	0.0084	0.0191	0.0198	0.0343	0.0355	0.0754
250				0.0016		0.0037	0.0040	0.0080	0.0176	0.0193	0.0313	0.0346	0.0713
280				0.0016		0.0037	0.0040	0.0079	0.0175	0.0192	0.0312	0.0345	0.0712
315						0.0037	0.0037	0.0079	0.0173	0.0176	0.0309	0.0314	0.0707
355						0.0035	0.0037	0.0077	0.0172	0.0176	0.0302	0.0313	0.0680
400						0.0032	0.0037	0.0065	0.0141	0.0174	0.0274	0.0310	0.0622
450							0.0036			0.0172		0.0303	
500							0.0032			0.0141		0.0274	

Unit : kgf m²

Size of Reducer											Nominal reduction ratio
9095	**9100**	**9105**	**9110**	**9115**	**9118**	**9121**	**9128**	**9131**	**9131**	**9136**	
	7.10		13.3								**6.3**
3.80	6.86	7.79	12.4	14.8							**7.1**
3.67	5.28	7.54	9.91	13.6							**8**
2.99	5.12	5.69	9.37	10.8							**9**
2.90	4.06	5.54	7.62	10.1							**10**
2.09	3.96	4.34	7.25	8.21							**11.2**
2.04	2.63	4.24	5.16	7.74							**12.5**
1.38	2.56	2.80	4.93	5.52							**14**
1.35	2.04	2.73	4.02	5.23							**16**
1.07	2.00	2.15	3.87	4.25							**18**
1.05		2.11		4.06							**20**
											22.4

Unit : kgf m²

Size of Reducer											Nominal reduction ratio
9095	**9100**	**9105**	**9110**	**9115**	**9118**	**9121**	**9128**	**9131**	**9131**	**9136**	
	2.03		2.88								**20**
0.991	2.00	2.09	2.79	3.02					18.3	18.7	**22.4**
0.978	1.80	2.07	2.44	2.91	3.15				16.7	17.0	**25**
0.868	1.78	1.84	2.38	2.53		4.80	4.92	9.35	13.4	13.6	**28**
0.859	1.20	1.83	1.59	2.46	2.62	4.58	4.69	8.96	12.5	12.7	**31.5**
0.571	1.19	1.23	1.55	1.65	2.27	3.77	3.85	6.86	9.26	9.40	**35.5**
0.566	1.10	1.22	1.40	1.60	1.70	3.62	3.69	6.62	8.63	8.73	**40**
0.520	1.10	1.12	1.38	1.44	1.67	2.52	2.57	4.57	6.93	7.01	**45**
0.516	0.551	1.11	0.711	1.41	1.48	2.43	2.48	4.41	6.54	6.60	**50**
0.284	0.547	0.562	0.696	0.735	1.33	1.95	1.98	3.24	5.37	5.42	**56**
0.282	0.512	0.558	0.636	0.716	0.863	1.89	1.92	3.14	5.11	5.15	**63**
0.264	0.509	0.519	0.626	0.651	0.776	1.47	1.49	2.51	4.08	4.11	**71**
0.263	0.489	0.517	0.578	0.639	0.666	1.43	1.45	2.44			**80**
0.255		0.495		0.587	0.607	1.24	1.25	1.96			**90**

Unit : kgf m²

Size of Reducer											Nominal reduction ratio
9095	**9100**	**9105**	**9110**	**9115**	**9118**	**9121**	**9128**	**9131**	**9131**	**9136**	
											63
											71
									2.85	2.88	**80**
	0.432		0.493						2.45	2.47	**90**
0.272	0.419	0.436	0.471	0.501	0.589	1.00	1.01	2.07	2.35	2.37	**100**
0.265	0.418	0.422	0.467	0.477	0.552	0.884	0.892	1.79	2.10	2.11	**112**
0.264	0.385	0.421	0.425	0.472	0.482	0.871	0.878	1.77	1.88	1.88	**125**
0.246	0.385	0.387	0.423	0.429	0.460	0.795	0.800	1.16	1.47	1.48	**140**
0.246	0.159	0.386	0.271	0.426	0.433	0.758	0.762	1.15	1.32	1.33	**160**
0.0777	0.158	0.160	0.269	0.273	0.418	0.657	0.661	1.04	1.04	1.04	**180**
0.0775	0.155	0.159	0.170	0.271	0.275	0.632	0.634	1.03	0.948	0.952	**200**
0.0758	0.155	0.156	0.169	0.171	0.266	0.454	0.455	0.631	0.930	0.933	**224**
0.0757	0.147	0.156	0.159	0.170	0.173	0.438	0.440	0.625	0.685	0.688	**250**
0.0715	0.147	0.148	0.158	0.160	0.249	0.332	0.333	0.583	0.673	0.675	**280**
0.0714	0.146	0.147	0.155	0.159	0.239	0.322	0.323	0.579	0.562	0.564	**315**
0.0709	0.141	0.146	0.150	0.156	0.157	0.320	0.321	0.448			**355**
0.0681	0.118	0.142	0.125	0.150	0.151	0.251	0.251	0.445			**400**
0.0623		0.118		0.125	0.126						**450**
											500

9015-9055 / Right Angle Double, Triple / Parallel double / Horizontal, Vertical Upright

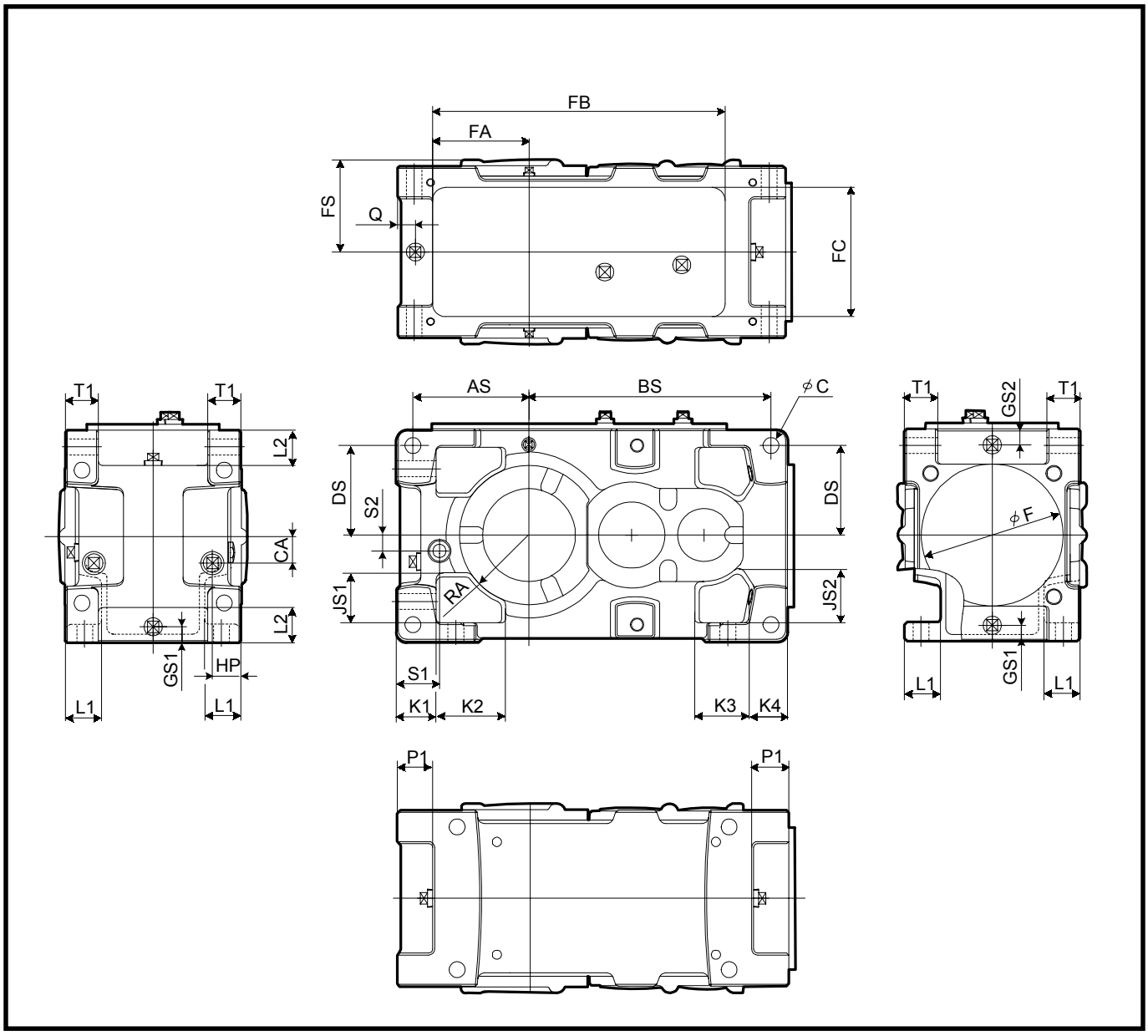

Size	FS	FA	FB	FC	AS	BS	C	CA	HP	DS	GS1	GS2	JS1	JS2	K1	K2	K3	K4
9015	118	110	325	175	140	260	15	25	38	115	23	23	60	58	50	75	85	50
9025	130	125	385	190	155	310	19	30	41	135	24	24	70	65	55	90	110	55
9030	143	147	445	200	175	365	24	40	43	135	24	24	75	81	60	105	80	60
9035	143	166	495	200	194	396	24	40	43	160	24	24	90	106	60	105	80	60
9040	165	168	510	240	205	420	28	48	55	170	28	28	95	107	75	125	100	75
9050	186	188	590	250	225	490	28	55	50	180	29	29	95	103	75	135	100	75
9055	186	219	660	250	256	529	28	55	50	215	29	29	120	138	75	135	100	75

Size	L1	L2	P1	Q	T1	S1	S2	I	F
9015	38	47	50	25	35	53	23	80	175
9025	45	50	50	26	40	58	26	87.5	200
9030	54	53	53	27	50	65	24	105	214
9035	54	60	53	27	50	65	24	120	214
9040	66	67	67	30	60	70	28	120	250
9050	68	67	67	31	60	78	32	140	280
9055	68	80	67	31	60	78	32	155	280

9015-9055/ Right Angle Quadruple / Parallel Triple, Quadruple / Horizontal, Vertical, Upright

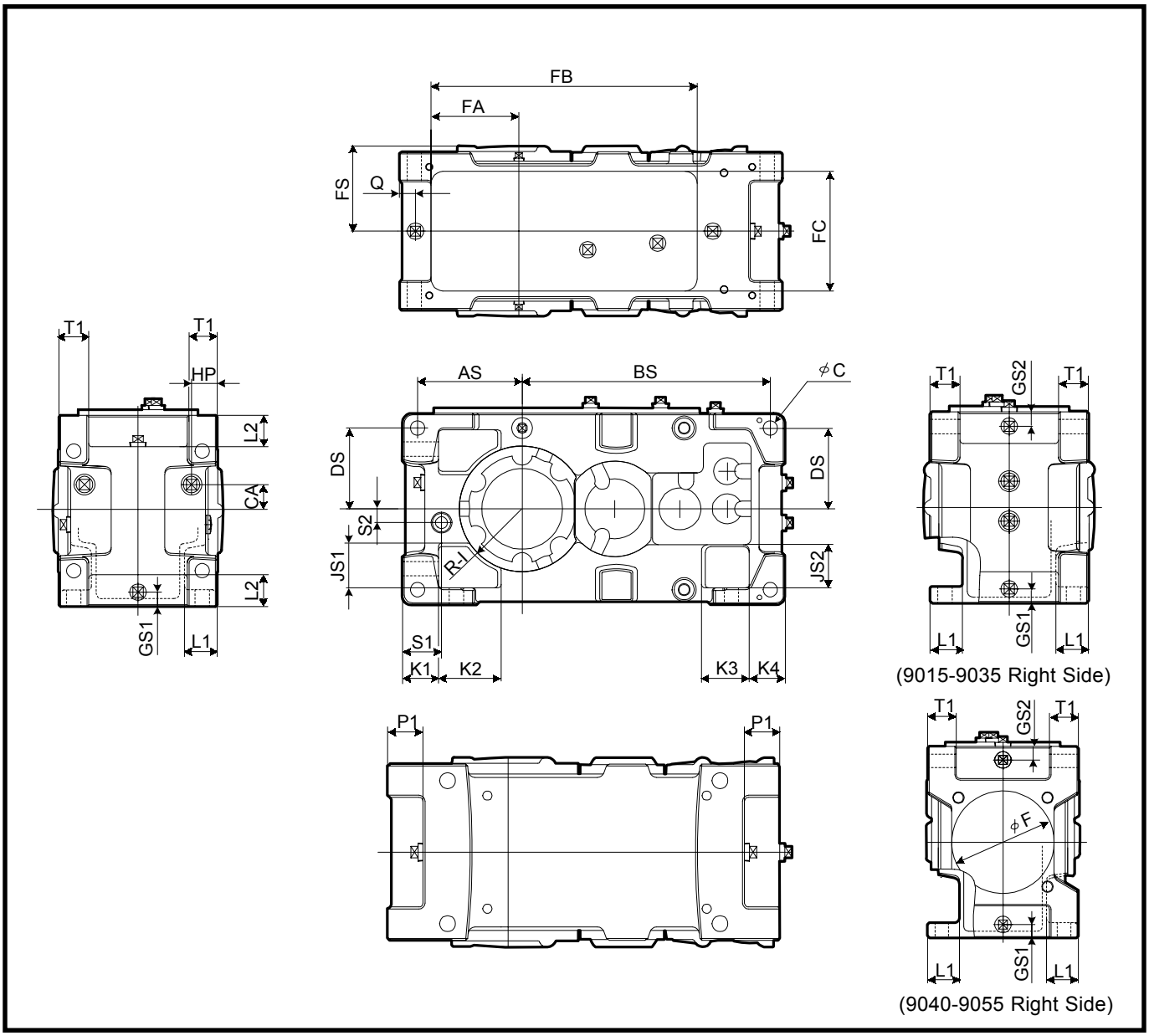

Size	FS	FA	FB	FC	AS	BS	C	CA	HP	DS	GS1	GS2	JS1	JS2	K1	K2	K3	K4
9015	118	110	325	175	140	305	15	25	38	115	23	23	60	58	50	75	65	50
9025	130	125	385	190	155	375	19	23	41	135	24	24	70	65	55	90	85	55
9030	143	147	445	200	175	415	24	44	43	135	24	24	75	72	60	105	80	60
9035	143	166	495	200	194	446	24	44	43	160	24	24	90	97	60	105	80	60
9040	165	168	510	240	205	494	28	56	55	170	28	28	95	100	75	125	100	75
9050	186	188	590	250	225	563	28	56	50	180	29	29	95	103	75	135	100	75
9055	186	219	660	250	256	602	28	56	50	215	29	29	120	138	75	135	100	75

Size	L1	L2	P1	Q	T1	S1	S2	I	F
9015	38	47	50	25	35	53	19	80	-
9025	45	50	50	26	40	58	23	87.5	-
9030	54	53	53	27	50	65	23	105	-
9035	54	60	53	27	50	65	23	120	-
9040	66	67	67	30	60	70	24	120	214
9050	68	67	67	31	60	78	24	140	214
9055	68	80	67	31	60	78	24	155	214

9060-9085 / Right Angle Double, Triple / Parallel Double / Horizontal, Vertical, Upright

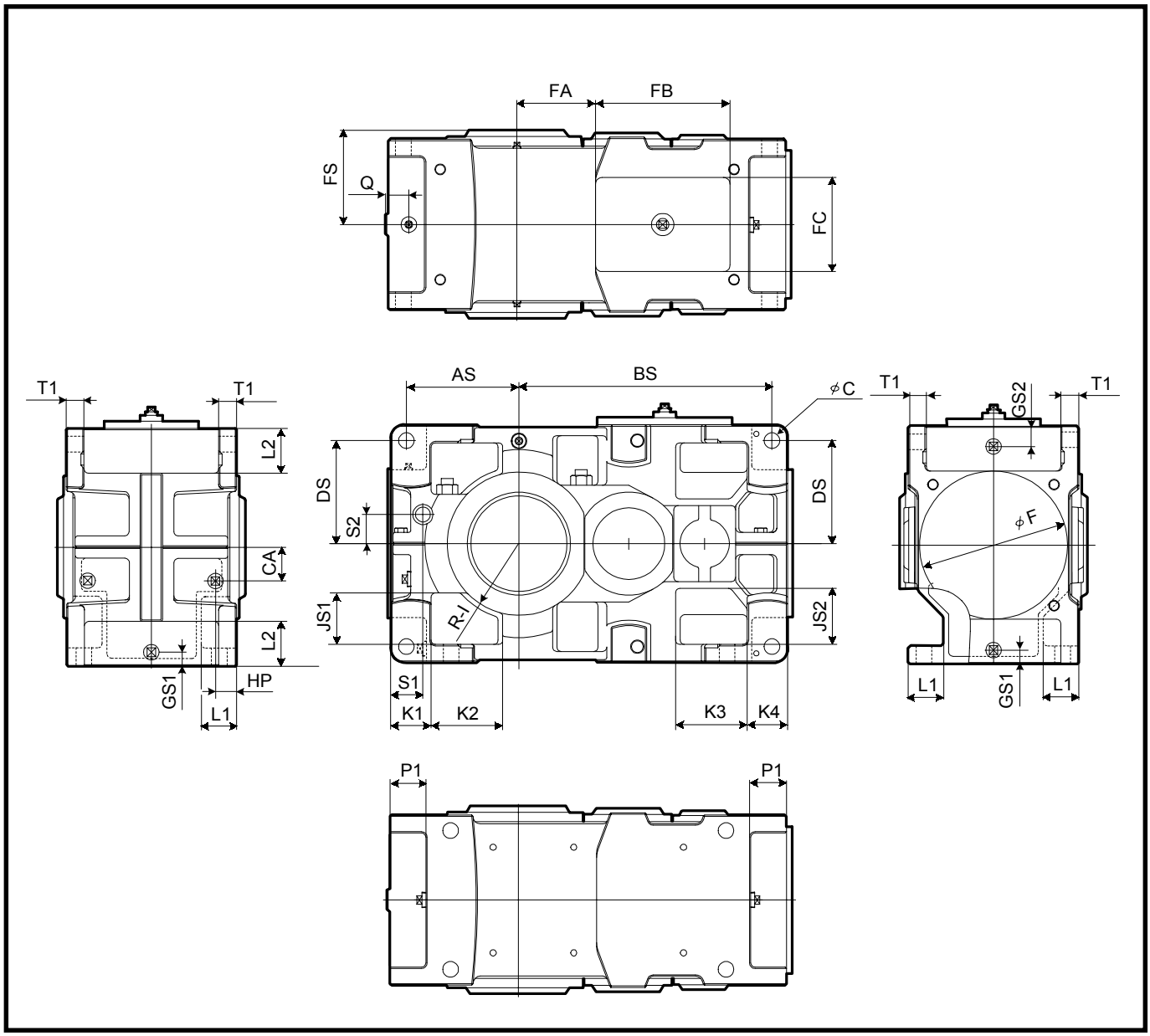

Size	FS	FA	FB	FC	AS	BS	C	CA	HP	DS	GS1	GS2	JS1	JS2	K1	K2	K3	K4
9060	210	175	300	210	251	564	35	75	47	230	31	45	105	120	90	160	160	90
9070	235	185	370	270	283	657	42	85	47	260	33	45	125	135	105	190	190	105
9075	235	238	370	270	330	710	42	85	47	295	33	45	148	158	105	190	190	105
9080	255	275	370	270	325	750	42	100	47	295	34	45	138	148	105	190	190	105
9085	265	331	370	270	369	806	42	100	47	335	34	45	168	188	105	190	190	105

Size	L1	L2	P1	Q	T1	S1	S2	I	F
9060	79	100	80	40	35	72	65	160	330
9070	94	110	95	40	40	72	75	175	380
9075	94	145	95	40	52	72	75	190	380
9080	96	120	95	45	52	82	85	190	420
9085	96	160	95	45	52	82	85	215	420

9060−9085/ Right Angle Quadruple / Parallel Triple, Quadruple /Horizontal, Vertical, Upright

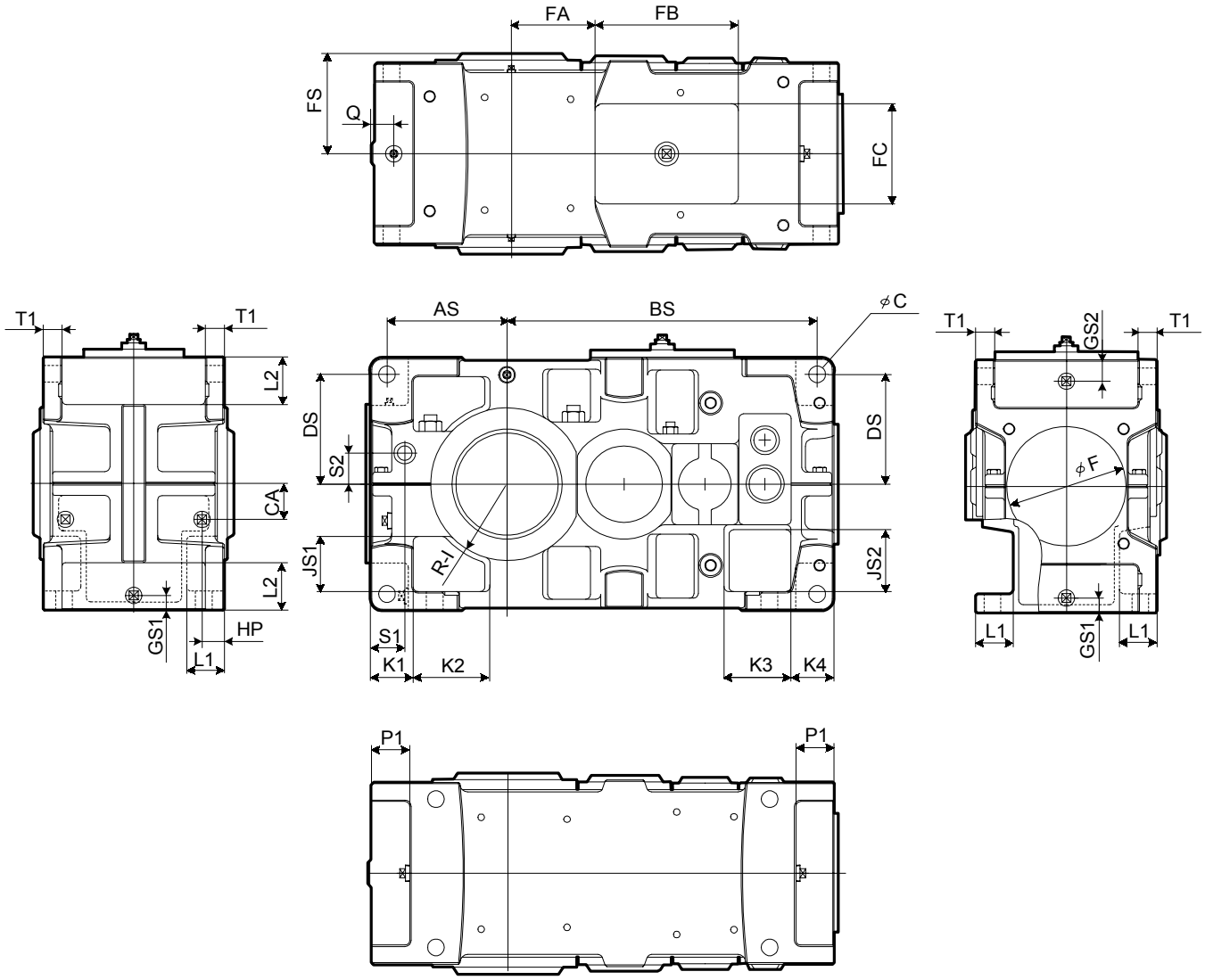

Size	FS	FA	FB	FC	AS	BS	C	CA	HP	DS	GS1	GS2	JS1	JS2	K1	K2	K3	K4
9060	210	175	300	210	251	649	35	75	47	230	31	45	105	145	90	160	140	90
9070	235	185	370	270	283	752	42	85	47	260	33	45	125	165	105	190	165	105
9075	235	238	370	270	330	805	42	85	47	295	33	45	148	188	105	190	165	105
9080	255	275	370	270	325	870	42	100	47	295	34	45	138	173	105	190	190	105
9085	265	331	370	270	369	926	42	100	47	335	34	45	168	213	105	190	190	105

Size	L1	L2	P1	Q	T1	S1	S2	I	F
9060	79	100	80	40	35	72	65	160	250
9070	94	110	95	40	40	72	75	175	280
9075	94	145	95	40	52	72	75	190	280
9080	96	120	95	45	52	82	85	190	330
9085	96	160	95	45	52	82	85	215	330

9090-9115 / Right Angle Double,Triple,Quadruple / Parallel Double,Triple,Quadruple /Horizontal, Vertical

Horizontal

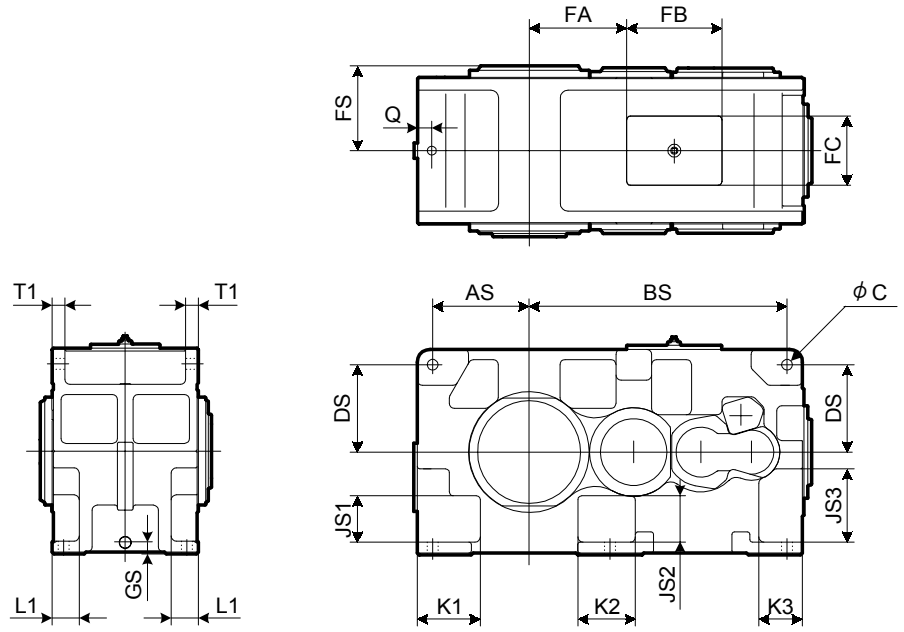

Size	FS	FA	FB	FC	AS	BS	C	DS	GS	JS1	JS2	JS3	K1	K2	K3	L1	Q	T1
9090	330	350	370	270	345	975	42	315	45	155	152	260	230	240	170	96	45	50
9095	330	380	370	270	375	1005	42	340	45	180	177	285	245	225	170	106	45	50
9100	375	435	370	270	375	1095	48	355	46	185	170	305	265	290	190	110	45	55
9105	375	470	370	270	410	1130	48	380	46	210	195	330	270	260	190	120	45	55
9110	407	525	370	270	420	1240	56	400	48	230	202	350	285	325	310	119	45	60
9115	407	575	370	270	470	1290	56	425	48	255	227	375	315	305	310	129	45	60

Vertical

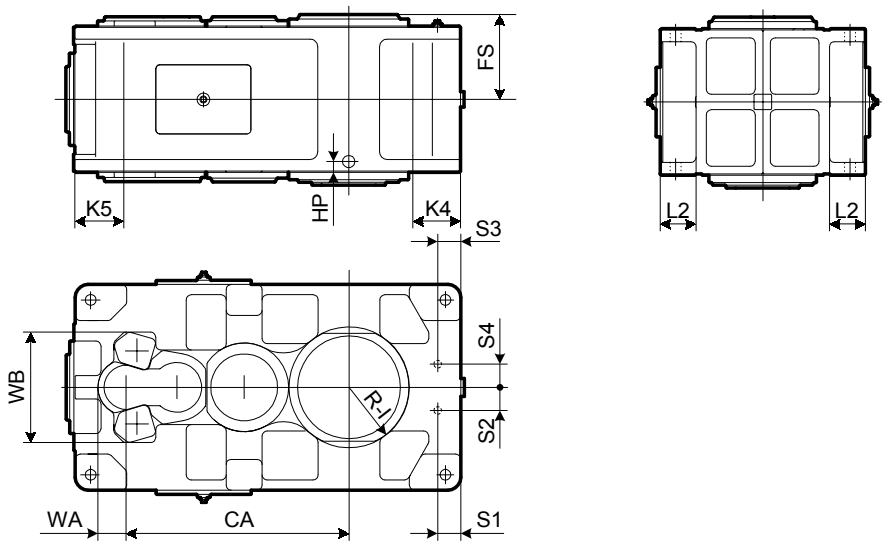

Size	FS	CA	HP	K4	K5	L2	I	S1	S2	S3	S4	WA	WB
9090	330	837	42	170	190	130	215	90	130	90	90	110	430
9095	330	867	42	185	215	140	235	80	140	90	90	110	430
9100	375	950	43	190	220	150	235	85	145	90	100	125	500
9105	375	984	43	215	240	160	260	80	155	90	100	125	500
9110	407	1050	44	210	240	170	265	90	150	105	100	125	500
9115	407	1099	44	235	270	180	280	85	150	105	100	125	500

Feature and Benefits

PARAMAX DRIVE units have a number of outstanding features compared to conventional solid shaft speed reducers.

1. There is no necessity for a large sized coupling, permitting substantial cost reduction.
2. It can be directly mounted onto the driven shaft, eliminating the necessity for foundation working for speed reducer installation and alignment operation.
3. Any unit is designed for compactness and ease of operation.

How to Install Unit

a. Torque Arm (Option)

The hollow shaft type PARAMAX DRIVE is secured with the torque arm to prevent it from being turned by the counterforce.
A torque arm is subjected to a compression or tensile load depending upon the direction of rotation of the slow speed shaft, and it must have a sufficient strength against shock loading at the start and during operation.
Being prepared as a optional accessory, the torque arm is designed in consideration of such loading conditions.
Please order us, if it is necessary.
The construction and strength of the torque arm mounting legs must be determined in consideration of impact load.

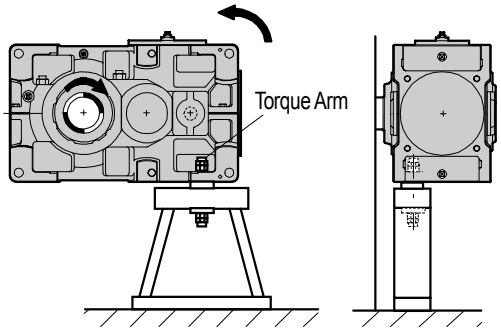

(DRG D1701)

b. How to Use Torque Arm

(1) When the torque arm is used with the speed reducer housing
The torque arm must be mounted in an installation hole closer to the application machine. (For torque arm mounting dimensions, refer to the dimension drawing.)

(2) When the torque arm is used with the common base plate
The torque arm must be mounted in a position as far from the low speed shaft as possible.

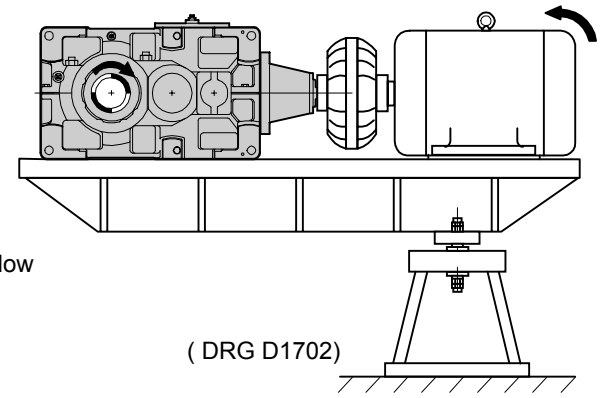

(DRG D1702)

Torque Arm Dimensions

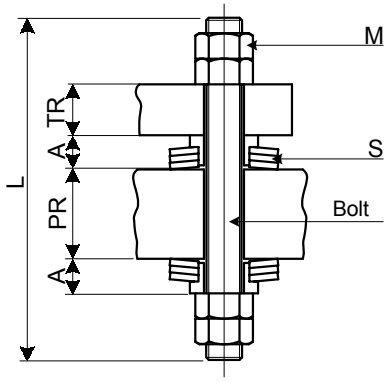

(DRG D1702)

Size	A	L	M (nut)	PR max	TR	S (bellevile spring)	
						DIN2093(nom.)	Qty
9015	13.1	140	M12	35	22	A50	2X2
9025	16.1	170	M16	40	25	A50	2X3
9030	18.9	200	M20	50	28	A63	2X3
9035	18.9	200	M20	50	28	A63	2X3
9040	21.7	240	M24	60	32	A80	2X2
9050	21.7	240	M24	60	32	A80	2X2
9055	21.7	240	M24	60	32	A80	2X2
9060	32.2	310	M30	85	35	A100	2X3
9070	38.2	370	M36	95	40	A100	2X4
9075	38.2	370	M36	95	52	A100	2X4
9080	38.2	370	M36	95	52	A100	2X4
9085	38.2	370	M36	95	52	A100	2X4
9090	38.6	370	M36	95	50	A125	2X3
9095	38.6	370	M36	95	50	A125	2X3
9100	47.6	420	M42	100	55	A125	2X4
9105	47.6	420	M42	100	55	A125	2X4
9110	48.5	460	M48	110	60	A160	2X3
9115	48.5	460	M48	110	60	A160	2X3

1. Hollow Shaft Dimensions

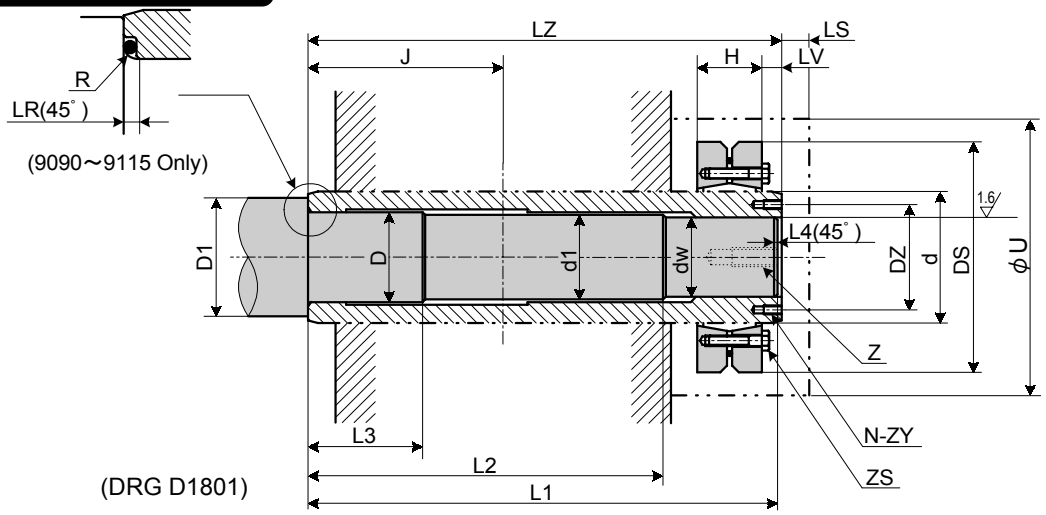

(DRG D1801)

Unit : mm

Size	Shrink Disk				Clamping Bolt		Hollow Shaft						Safety Cover		Driven Shaft									
	MODEL (note:1)	d	Ds	H	ZS	TA N・m	J	LZ	LR	LV	N - ZY	DZ	LS	U	dw	d1	D h7	D1 min	L1	L2	L3	L4	R	Z (Deep)
9015	TAS3091.4-080	80	145	38	M8	35	135	328	-	14	4 - M6	70	15	161	60h6	61	63	78	325	240	80	3	-	M20 (30)
9025	TAS3081. -090	90	155	39	M8	35	145	358	-	14	4 - M6	80	17	176	70h6	71	73	88	355	270	80	3	-	M20 (30)
9030	TAS3091.1-100	100	170	54	M10	59	160	393	-	14	4 - M6	90	20	209	80h6	81	83	98	390	295	90	3	-	M20 (30)
9035	TAS3091. -110	110	185	60	M10	68	160	403	-	14	4 - M6	97	20	244	85h6	86	88	103	390	295	90	3	-	M24 (35)
9040	TAS3081. -125	125	215	54	M10	70	180	448	-	20	4 - M8	110	17	244	95h6	96	98	113	445	335	110	3	-	M24 (35)
9050	TAS3093. -140	140	230	74	M12	120	200	503	-	22	4 - M10	124	17	284	105h6	106	108	123	500	380	110	3	-	M24 (35)
9055	TAS3091. -165	165	290	88	M16	245	205	528	-	27	4 - M12	146	17	314	120h6	121	123	138	525	385	120	3	-	M24 (35)
9060	TAS3091. -165	165	290	88	M16	250	230	583	-	27	4 - M12	146	12	322	125h6	126	128	143	580	435	130	3	-	M24 (35)
9070	TAS3081. -185	185	330	86	M16	290	260	644	-	26	4 - M12	167	21	371	145h6	146	148	163	640	475	160	5	-	M30 (45)
9075	TAS3071. -200	200	350	86	M16	284	265	651	-	26	4 - M12	177	21	406	155h6	156	158	173	646	475	160	5	-	M30 (45)
9080	TAS3081. -220	220	370	104	M16	290	285	714	-	26	4 - M12	195	21	401	170g6	171	173	188	709	520	190	5	-	M30 (45)
9085	TAS3071. -240	240	405	109	M20	559	285	714	-	27	4 - M12	210	21	456	180g6	181	183	198	709	520	190	5	-	M30 (45)
9090	TAS3081. -240	240	405	109	M20	570	350	844	6	27	6 - M12	215	21	451	190g6	191	193	212	840	635	200	5	4.5	M36 (55)
9095	TAS3081.1-260	260	440	120	M20	535	350	859	6	27	6 - M12	230	14	450	200g6	201	203	222	855	640	205	5	4.5	M36 (55)
9100	TAS3081.1-260	260	440	120	M20	535	390	934	6	27	6 - M12	235	21	491	210g6	211	213	234	930	705	215	5	4.5	M36 (55)
9105	TAS3081.1-280	280	460	134	M20	535	390	949	6	27	6 - M12	250	19	480	220g6	221	223	244	945	715	225	5	4.5	M36 (55)
9110	TAS3081.1-300	300	485	142	M20	535	420	1030	6	32	6 - M16	270	15	551	240g6	241	243	263	1025	770	245	5	4.5	M36 (55)
9115	TAS3091. -320	320	520	184	M20	490	420	1065	6	32	6 - M16	285	15	550	250g6	251	253	273	1060	785	245	5	4.5	M36 (55)

note : 1 Shrink disk (made by SCHAFER) type No.
2 For a vertical type unit, the thrust washer B must be provided to provided to prevant the reducer from being moved when the locking bolt Zs is loosened.

2.Mounting Procedure

(1) Clean and degrease contact surface (a) and (c).
(2) Smear surface (c) with “Molykote 321” or its equivalent. However, keep surface (a) as clean as possible (no grease).
(3) Slide O-ring (b) onto the shaft.(Size 9090 to 9115)
(4) Mount the reducer on the driven shaft and screw nuts (e) until fases (g) and (h) make contact.
(5) Set the shrink disk (k) at dimensions (LV). Thighten locking bolt (ZS) at specified torque (TA)(using a torque wrench).

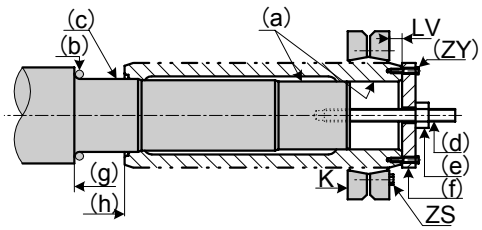

(DRG D1802)

3.Removal Procedure

(1) Loosen locking bolt (ZS) and remove shrink disk (k).
(2) Set thrust washer (f) and hexagon head bolt (n).
Remove the reducer from the driven shaft using bolt (m).

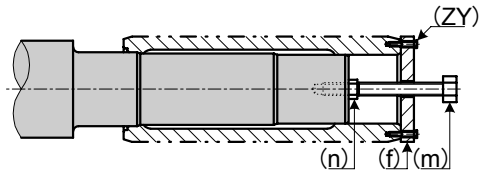

(DRG D1803)

note : Parts (d),(e),(f),(ZY),(m) and (n) are optional.
Order these as required.

1. Hollow Shaft Dimensions

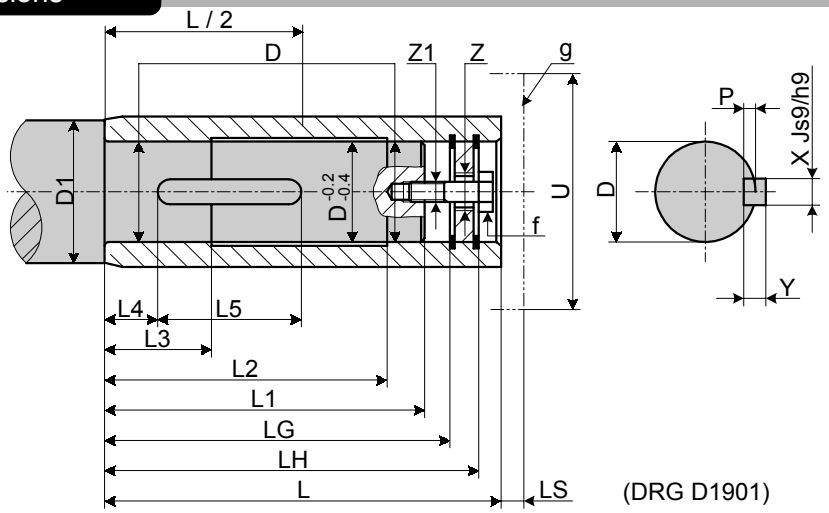

(DRG D1901)

Unit : mm

Size	Hollow shaft						Driven Shaft											Locking Screw Thread Size X Body Length	Locking Distance Ring O.D. X W DRG D1905(h)
					Safety Cover														
	L	LG	LH	Z	LS	U	D	D1 min	L1	L2	L3	L4	L5	X	Y	P	Z1 (Deep)		
9015	270	240	258	M24	8	161	55j6	70	235	200	70	30	115	16	10	6	M20(30)	M20X50	φ55X5
9025	300	265	286	M24	10	176	65j6	80	260	220	80	35	125	18	11	7	M20(30)	M20X50	φ65X5
9030	330	290	314	M24	10	230	75j6	90	285	240	90	35	145	22	14	9	M20(30)	M20X55	φ75X5
9035	330	290	315	M24	10	260	85j6	100	285	240	90	35	145	22	14	9	M20(30)	M20X55	φ85X5
9040	360	314	340	M30	10	260	90j6	105	310	260	100	40	180	25	14	9	M24(35)	M24X60	φ90X4
9050	410	356	388	M30	10	300	105j6	120	310	300	110	45	220	28	16	10	M24(35)	M24X65	φ105X6
9055	410	356	388	M30	10	330	115j6	130	350	300	110	45	220	32	18	11	M24(35)	M24X65	φ115X6
9060	470	415	447	M30	10	340	125j6	140	410	345	125	50	260	32	18	11	M24(35)	M24X65	φ125X5
9070	530	470	504	M36	10	370	145j6	160	465	390	140	55	290	36	20	12	M30(45)	M30X70	φ145X5
9075	530	470	504	M36	10	400	150j6	165	465	390	140	55	290	40	22	13	M30(45)	M30X70	φ150X5
9080	570	510	544	M36	10	400	165j6	180	505	415	155	60	320	40	22	13	M30(45)	M30X70	φ165X5
9085	570	510	544	M36	10	450	175j6	190	505	415	155	60	320	40	22	13	M30(45)	M30X70	φ175X5

note : 1 The key and keyway comform to JIS B 1301-1976(ISO)"Sunk keys and keyways" parallel keys(regular class)
2 The locking screw and distance ring will not be supplied. Please prepare, if they are necessary.
3 Dimension from center of housing to shaft end is L/2.

2. Mounting Procedure

The Hollow shaft bore is provided with retaining ring (d).
Ring (d) is the essential component for mounting, securing, and removing the unit.
(1) Smear surface of the shaft (e) with molybdenum disulfide grease.
(2) Turn nut (b) and slide the reducer over the driven shaft.

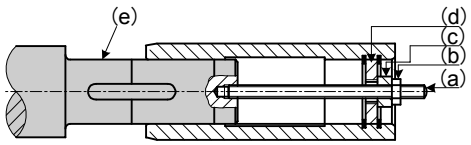

(DRG D1902)

3.Securing

(1) After mounting the reducer on the driven shaft, fix bolt (f).(Bolt (f) is not supplied with the unit.)
(2) The bore should be protected by cover (g).

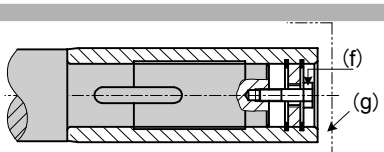

(DRG D1903)

4.Removal Procedure

(1) Remove ring (d), mount bolt (n9, and reset ring (d).
Attach bolt (J) to ring (d), and turn bolt (J) to disconnect the hollow shaft from the driven shaft.

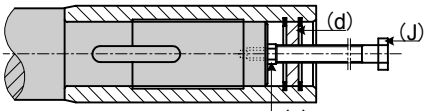

(DRG D1904)

5.Special Cases

(1) If the driven shaft has no shoulder (DRG D1905) when mounting, provide a distance ring (h) for fixing in place.(Ring (h) is not supplied with the unit.)

note : Parts (a),(b),(c),(n) and (J) are optional. Order these as required.

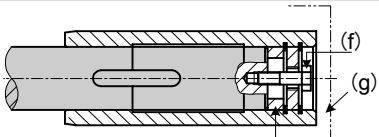

(DRG D1905)

9015-9085

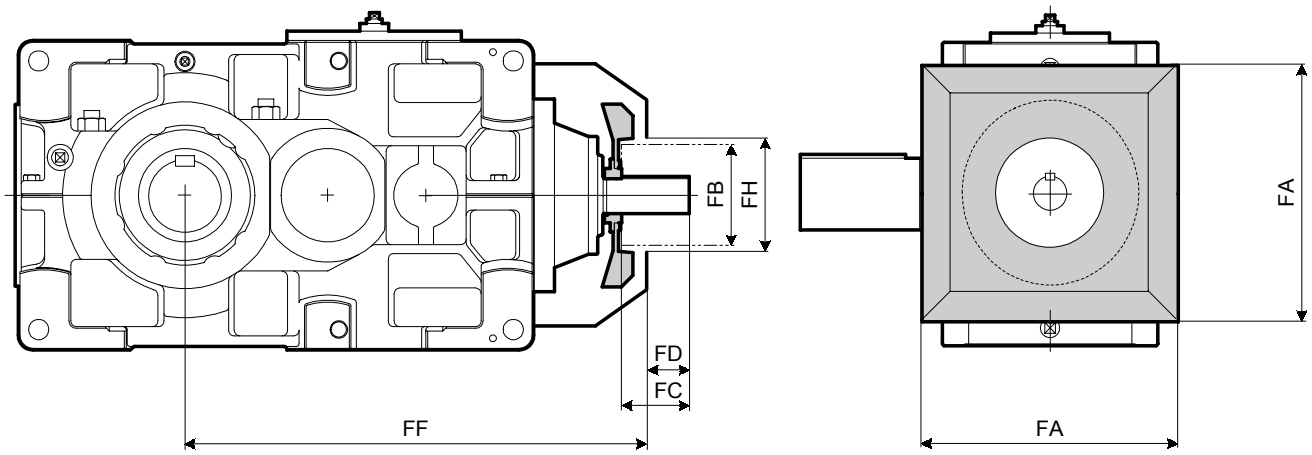

9090- 9115

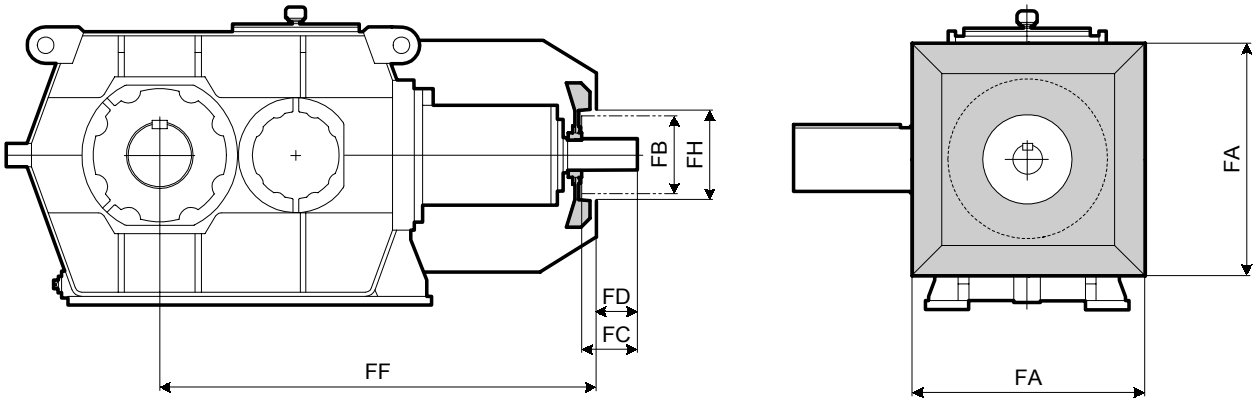

Size	FA	FB	FC	FD	FF	FH
9015	250	125	50	30	477	145
9025	270	140	50	30	515	160
9030	300	140	80	52	593	160
9035	300	140	80	52	624	160
9040	340	160	80	52	653	180
9050	380	160	80	52	703	180
9055	380	160	80	52	742	180
9060	440	160	105	65	800	180
9070	490	200	105	65	900	220
9075	490	200	105	65	953	220
9080	540	225	105	60	1020	245
9085	540	225	105	60	1076	245

Size	FA	FB	FC	FD	FF	FH
9095	680	250	135	90	1303	270
9105	760	250	175	130	1459	270
9115	820	250	175	130	1672	270

9015-9085

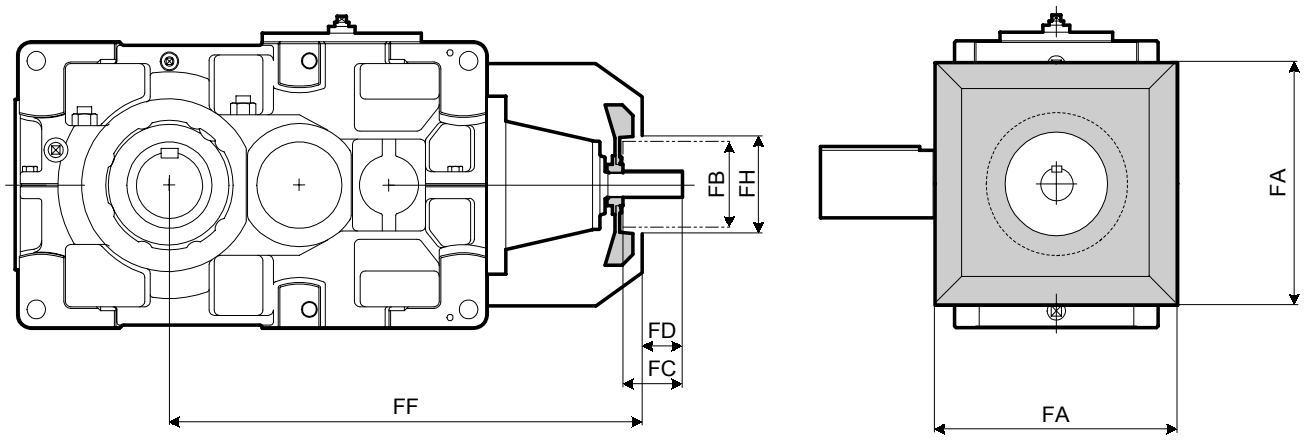

9090-9115

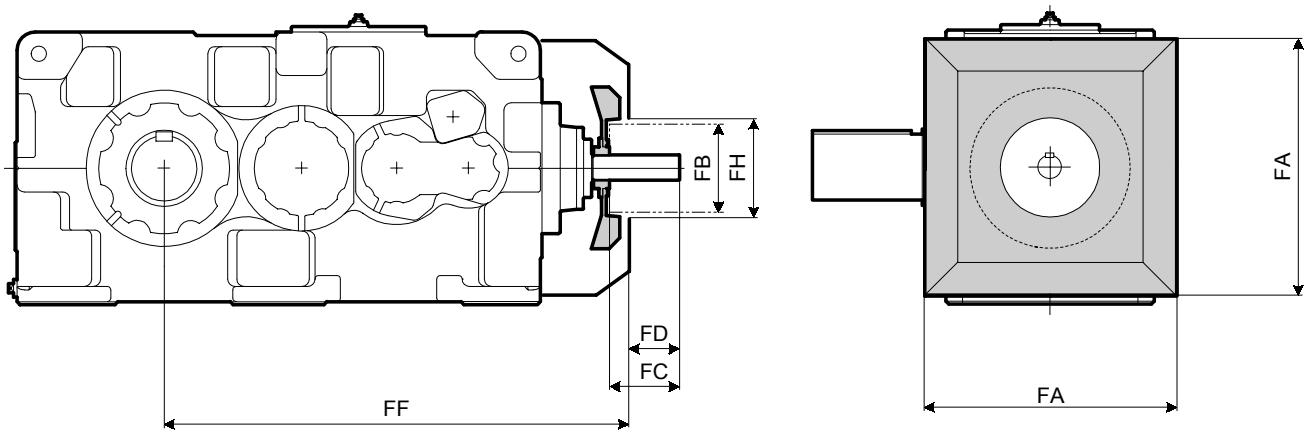

Size	FA	FB	FC	FD	FF	FH
9030	300	125	50	30	626	145
9035	300	125	50	30	657	145
9040	340	125	50	30	686	145
9050	380	140	50	22	786	160
9055	380	140	50	22	825	160
9060	440	160	80	52	887	180
9070	490	160	80	52	975	180
9075	490	160	80	52	1028	180
9080	540	160	105	65	1111	180
9085	540	160	105	65	1167	180

Size	FA	FB	FC	FD	FF	FH
9090	680	200	105	65	1255	220
9095	680	200	105	65	1285	220
9100	760	225	105	60	1414	245
9105	760	225	105	60	1448	245
9110	820	225	135	90	1594	245
9115	820	225	135	90	1643	245

note) Consult us for cooling fan dimension of size 9118 and 9136.

9015-9115 / Parallel / Double Reduction / Horizontal, Upright

9015-9085

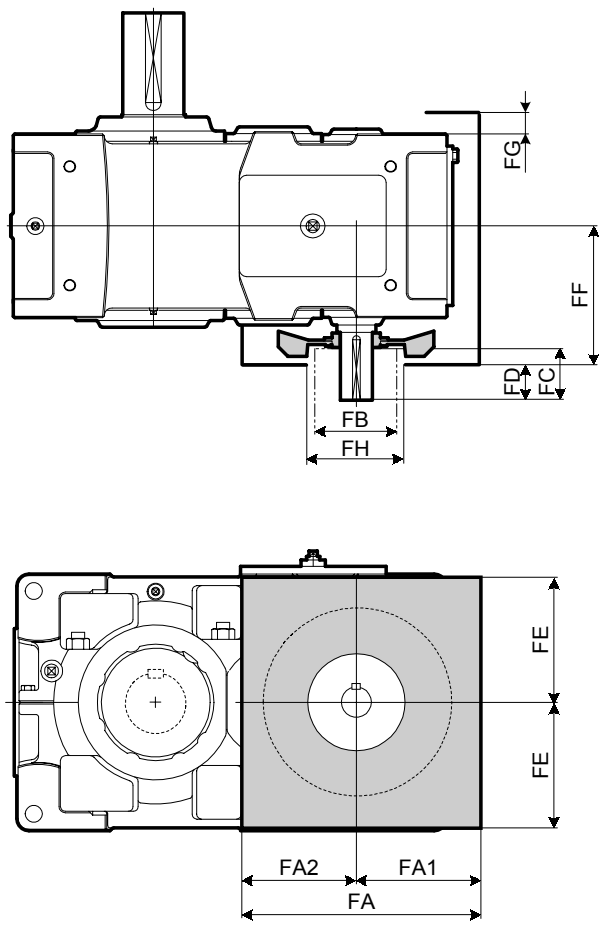

9090-9115

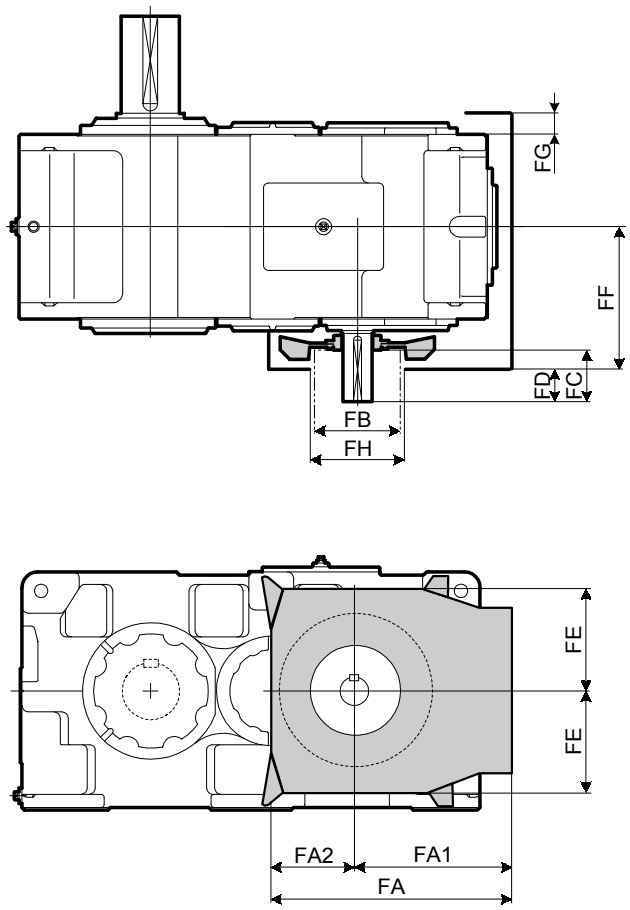

Size	FA1	FA2	FA	FB	FC	FD	FE	FF	FG	FH
9015	129	129	258	125	50	30	130	181	32.5	145
9025	143	143	286	140	50	30	150	196	27.5	160
9030	169	169	338	140	80	52	155	217	27.5	160
9035	169	169	338	140	80	52	180	217	27.5	160
9040	188	188	376	160	80	52	195	232	21.5	180
9050	208	208	416	160	80	52	205	251	28.5	180
9055	208	208	416	160	80	52	240	251	28.5	180
9060	240	240	480	200	105	65	260	295	40	220
9070	274	274	548	225	105	65	295	320	44	245
9075	274	274	548	225	105	65	330	320	44	245
9080	296	296	592	225	135	95	330	339	52	245
9085	296	296	592	225	135	95	370	339	52	245

Size	FA1	FA2	FA	FB	FC	FD	FE	FF	FG	FH
9090	465	277	742	250	135	90	345	410	65	270
9095	465	277	742	250	135	90	345	410	65	270
9100	515	314	829	250	175	130	395	455	65	270
9105	515	314	829	250	175	130	395	455	65	270
9110	565	356	921	250	175	130	445	485	65	270
9115	565	356	921	250	175	130	445	485	65	270

9015−9115 / Parallel / Triple Reduction / Horizontal, Upright

9015-9085

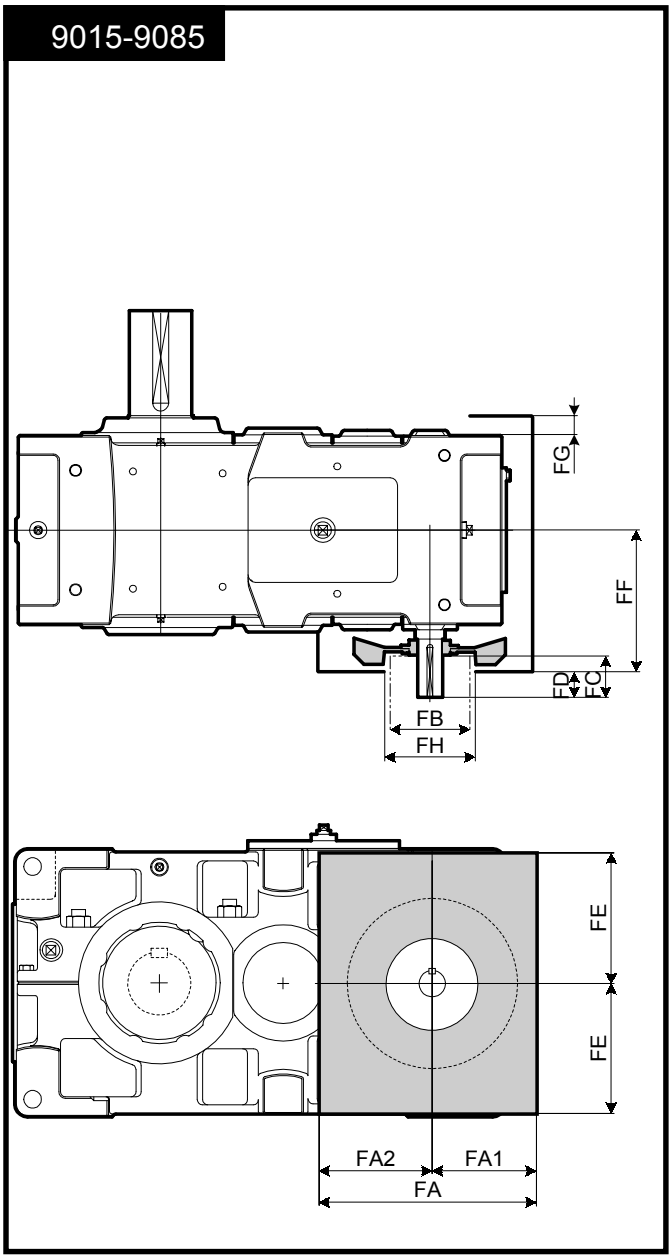

9090-9115

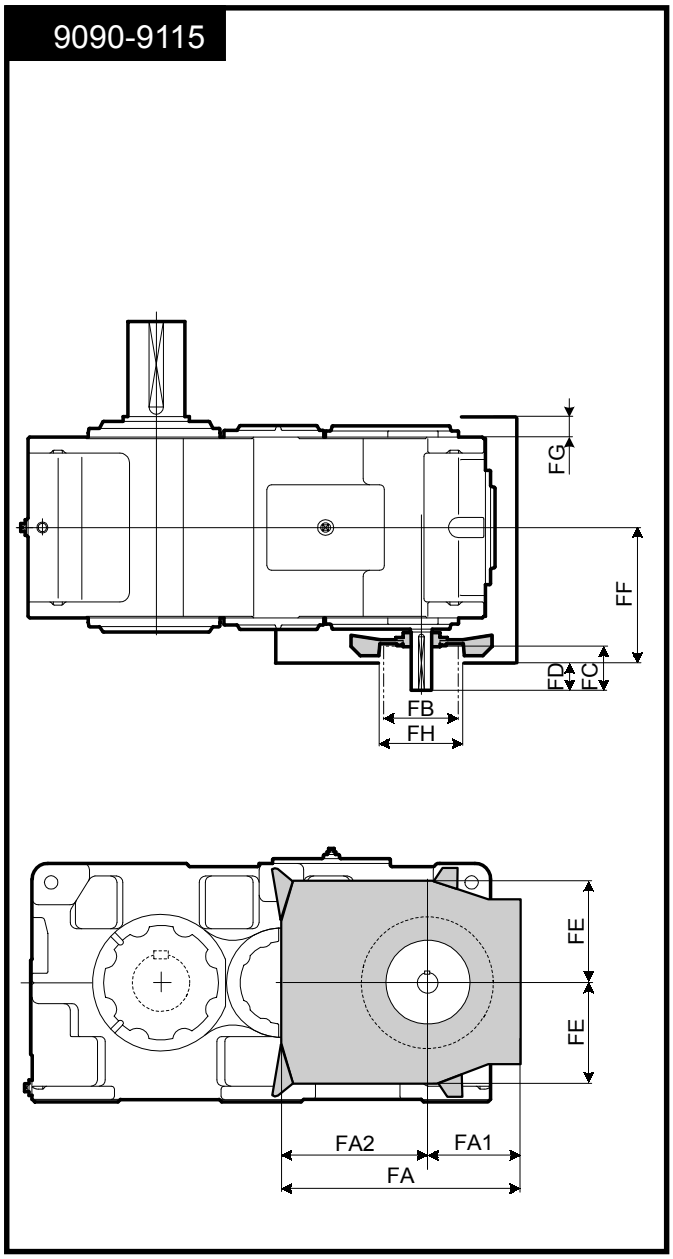

Size	FA1	FA2	FA	FB	FC	FD	FE	FF	FG	FH
9015	111	111	222	125	30	10	130	180	32.5	145
9025	129	129	258	125	30	10	150	194	27.5	145
9030	140	140	280	125	50	30	155	211	27.5	145
9035	150	150	300	140	50	22	180	219	27.5	160
9040	170	170	340	140	50	22	195	234	21.5	160
9050	172	172	344	140	80	52	205	252	28.5	160
9055	172	172	344	140	80	52	240	252	28.5	160
9060	199	199	398	160	80	52	260	277	40	180
9070	221	221	442	160	80	52	295	302	44	180
9075	221	221	442	160	80	52	330	302	44	180
9080	247	247	494	200	105	65	330	340	52	220
9085	247	247	494	200	105	65	370	340	52	220

Size	FA1	FA2	FA	FB	FC	FD	FE	FF	FG	FH
9090	268	474	742	200	105	65	345	405	65	220
9095	268	474	742	200	105	65	345	405	65	220
9100	289	540	829	225	105	65	395	450	65	245
9105	289	540	829	225	105	65	395	450	65	245
9110	339	582	921	225	135	95	445	480	65	245
9115	339	582	921	225	135	95	445	480	65	245

note) Consult us for cooling fan dimension of size 9118 and 9136.

9015-9055 / Horizontal

Air Breather

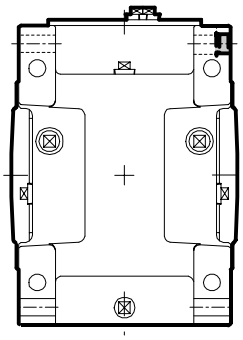

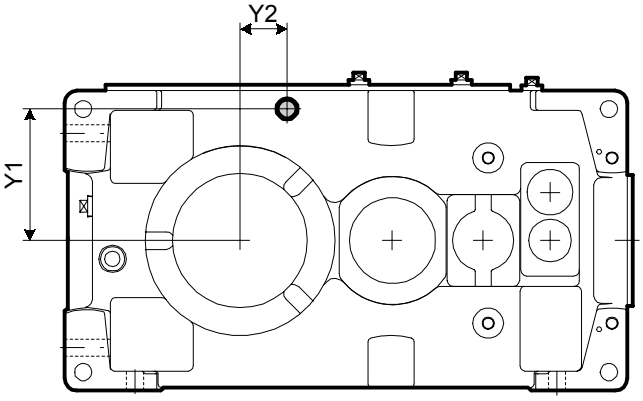

Size	Y1	Y2
9015	110	35
9025	130	25
9030	135	0
9035	160	0
9040	175	30
9050	180	25
9055	215	0

Drain Valve

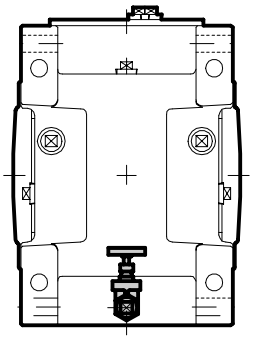

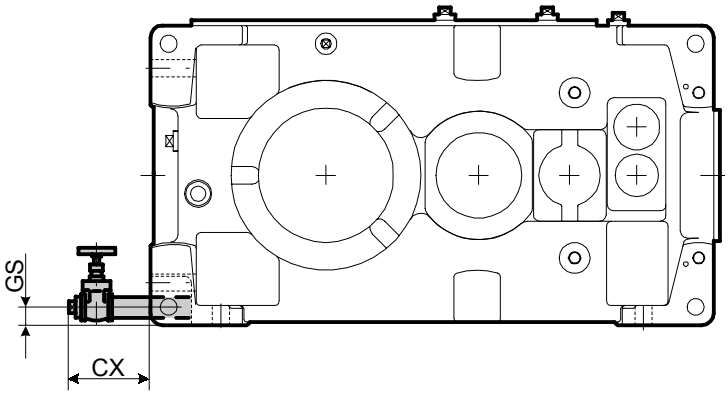

Size	CX	GS
9015	126	23
9025	126	24
9030	123	24
9035	123	24
9040	133	28
9050	133	29
9055	133	29

9015–9055 / Vertical

Air Breather

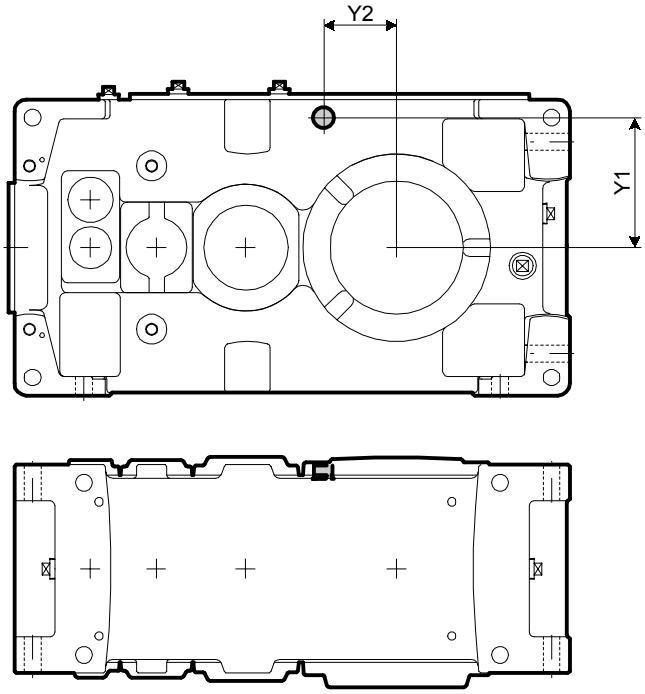

Size	Y1	Y2
9015	110	35
9025	130	25
9030	135	0
9035	160	0
9040	175	30
9050	180	25
9055	215	0

Drain Valve

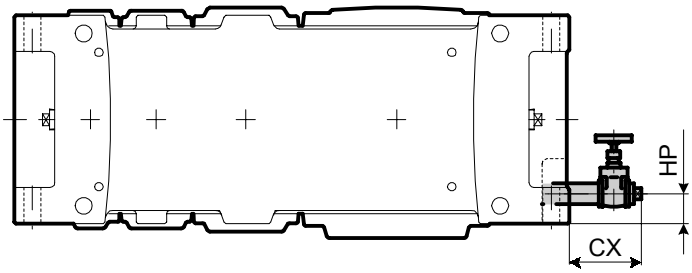

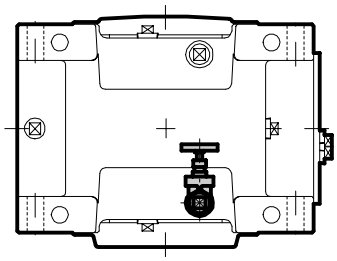

Parallel Triple, Quadruple
Right Angle Quadruple

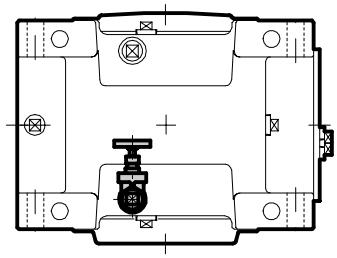

Parallel Double
Right Angle Double, Triple

Size	CX	HP
9015	126	38
9025	121	41
9030	113	43
9035	113	43
9040	127	55
9050	119	50
9055	119	50

9015-9055 Upright

Air Breather

Size	Y1
9015	112
9025	131
9030	136
9035	161
9040	172
9050	181
9055	216

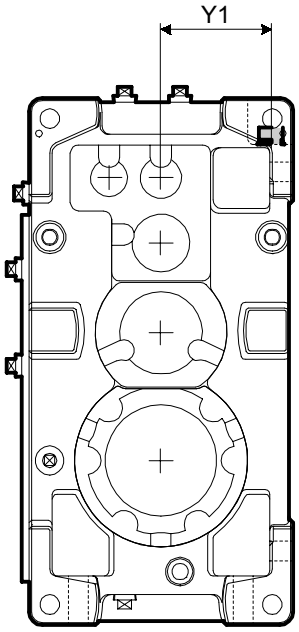

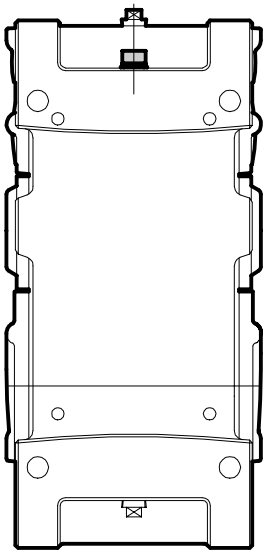

Drain Valve

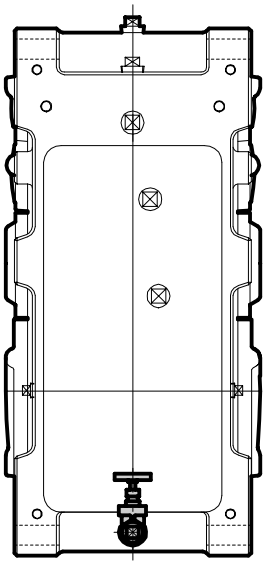

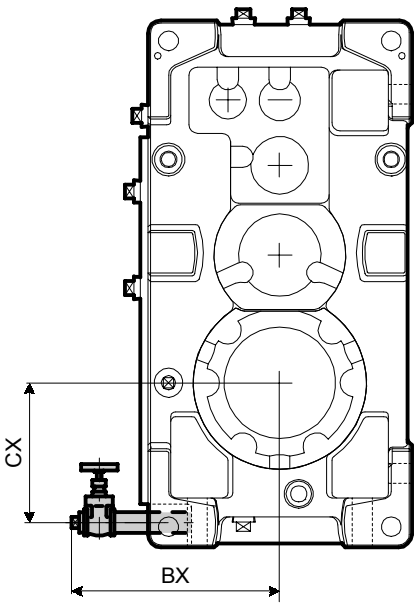

Size	BX	CX
9015	264	135
9025	281	149
9030	283	173
9035	301	192
9040	333	205
9050	343	224
9055	365	255

9060-9085 Horizontal

Air Breather

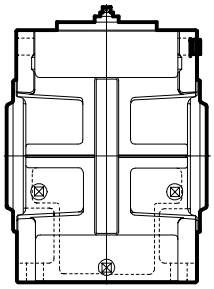

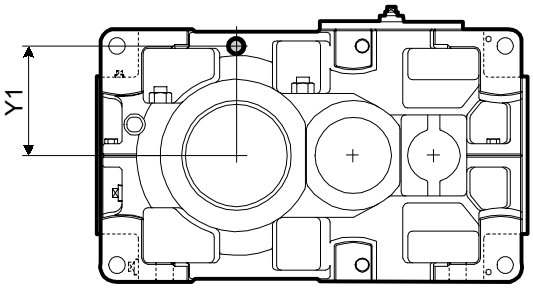

Size	Y1
9060	229
9070	263
9075	298
9080	298
9085	338

Oil Level Gauge

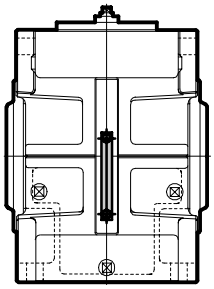

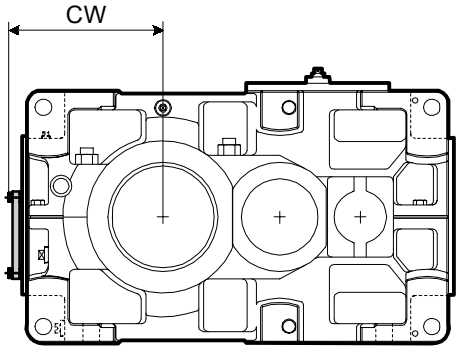

Size	CW
9060	318
9070	355
9075	402
9080	397
9085	441

Drain Valve

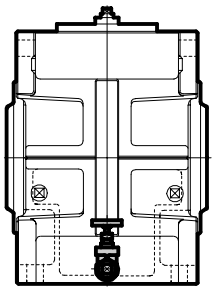

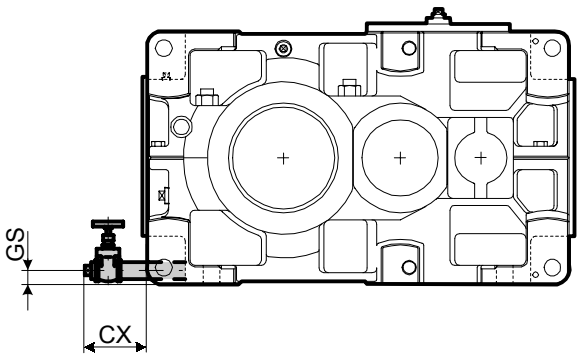

Size	CX	GS
9060	170	31
9070	155	33
9075	155	33
9080	155	34
9085	157	34

9060-9085 Vertical

Air Breather

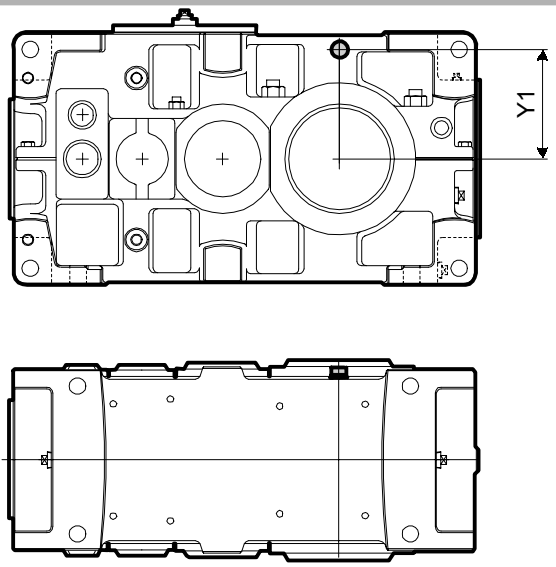

Size	Y1
9060	229
9070	263
9075	298
9080	298
9085	338

Oil Level Gauge

note) Oil level guage is not max dimension.

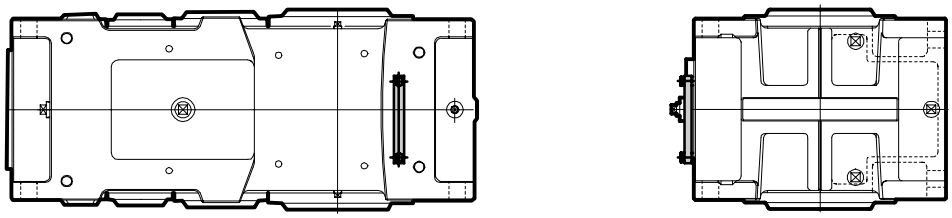

Drain Valve

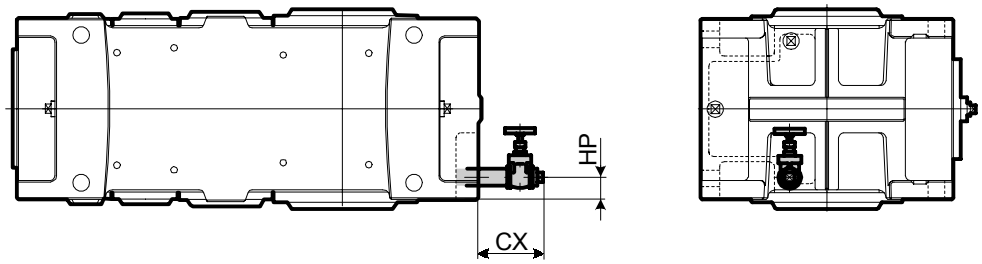

Size	CX	HP
9060	120	47
9070	120	47
9075	120	47
9080	110	47
9085	110	47

9060-9085 Upright

Air Breather

Size	Y1
9060	234
9070	267
9075	302
9080	301
9085	341

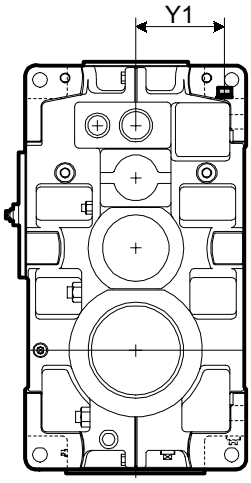

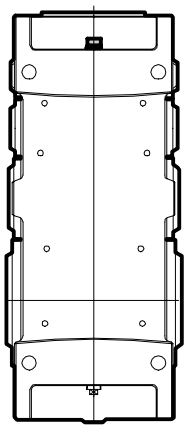

Oil Level Gauge

note) Oil level guage is not max dimension.

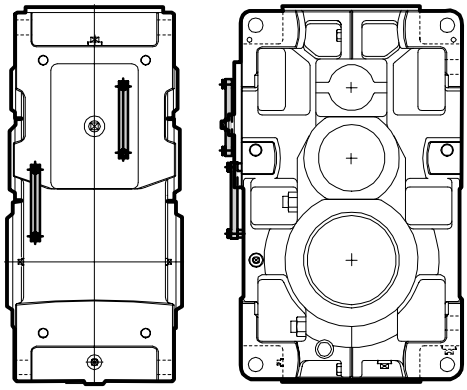

Right Angle Double, Triple / Parallel Double

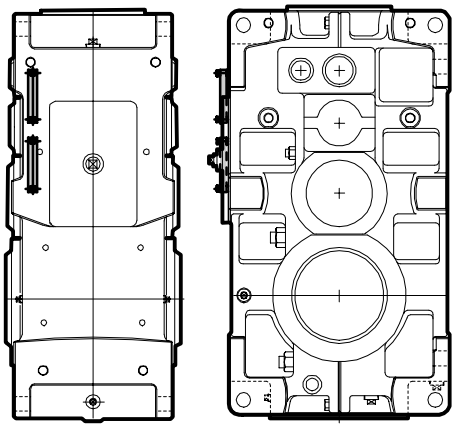

Right Angle Quadruple / Parallel Triple, Quadruple

Drain Valve

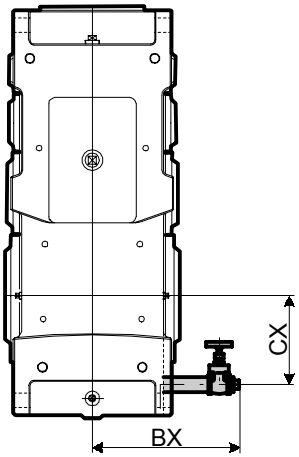

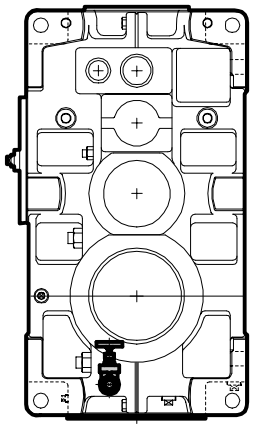

Size	BX	CX
9060	335	214
9070	360	251
9075	360	298
9080	380	283
9085	380	327

9090-9115 Horizontal

Air Breather

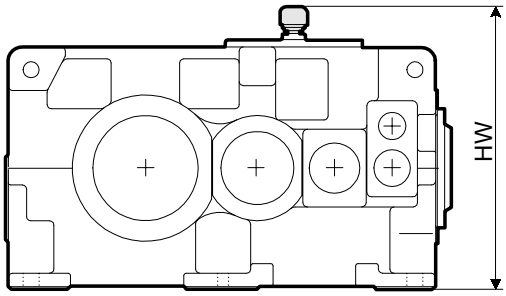

Size	HW
9090	839
9095	889
9100	939
9105	989
9110	1039
9115	1089

Oil Level Gauge

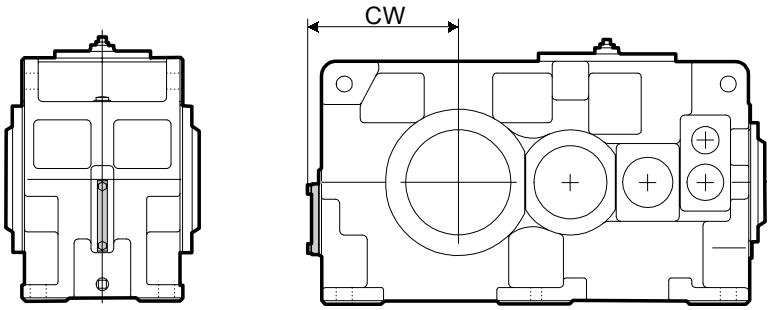

Size	CW
9090	435
9095	465
9100	475
9105	510
9110	525
9115	575

Drain Valve

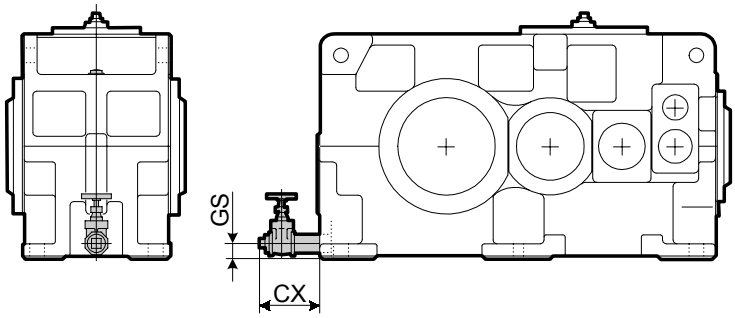

Size	CX	GS
9090	162	45
9095	162	45
9100	162	46
9105	162	46
9110	162	48
9115	162	48

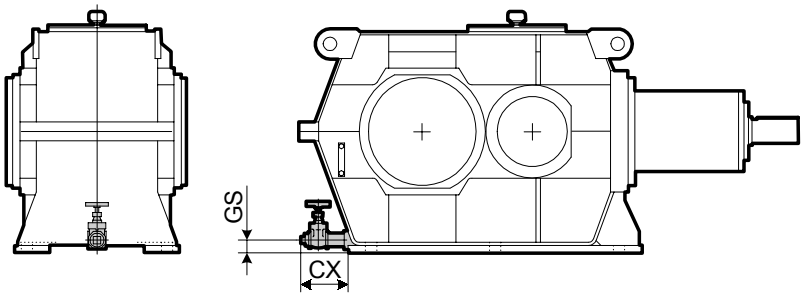

Size	CX	GS
9095R2	172	62
9105R2	172	62
9115R2	172	69

9090-9115 Vertical

Air Breather

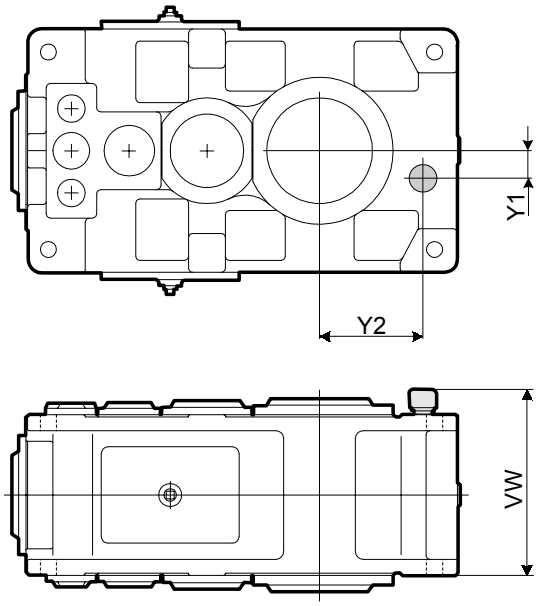

Size	VW	Y1	Y2
9090	626	90	315
9095	626	90	345
9100	706	100	355
9105	706	100	390
9110	766	100	405
9115	766	100	440

Oil Level Gauge

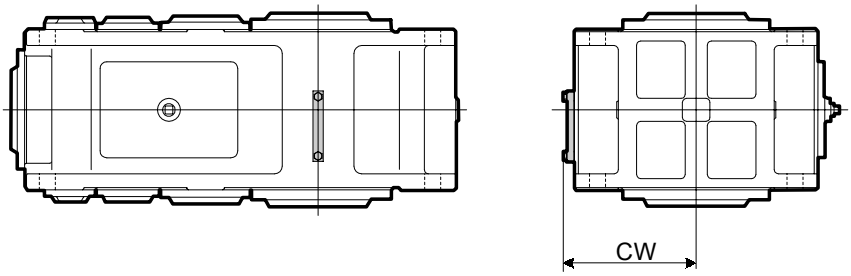

Size	CW
9090	405
9095	430
9100	455
9105	480
9110	505
9115	530

Drain Valve

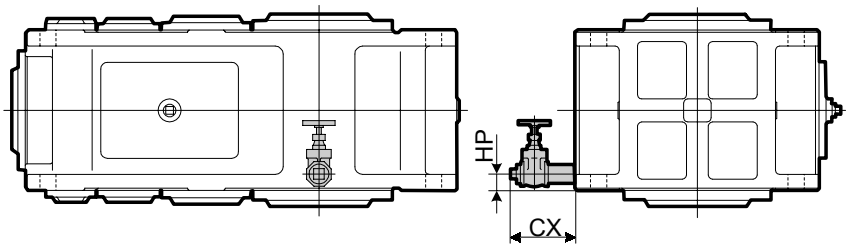

Size	CX	HP
9090	162	42
9095	162	42
9100	162	43
9105	162	43
9110	162	44
9115	162	44

Right Angle Shaft Horizontal Mounting

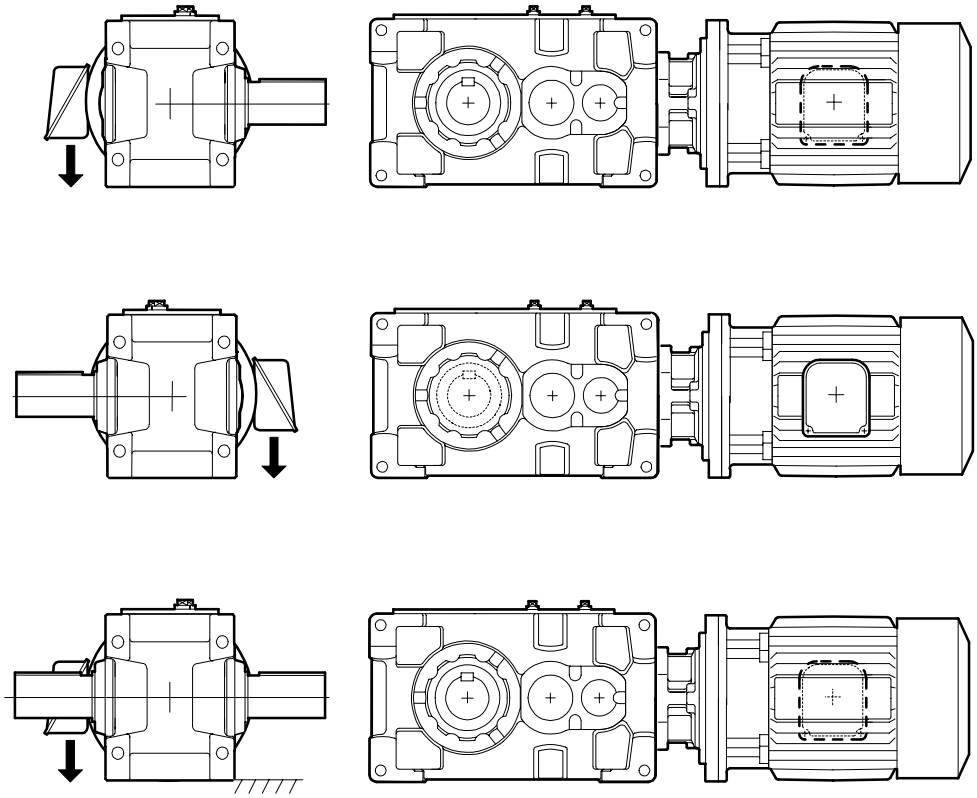

Right Angle Shaft Vertical Mounting

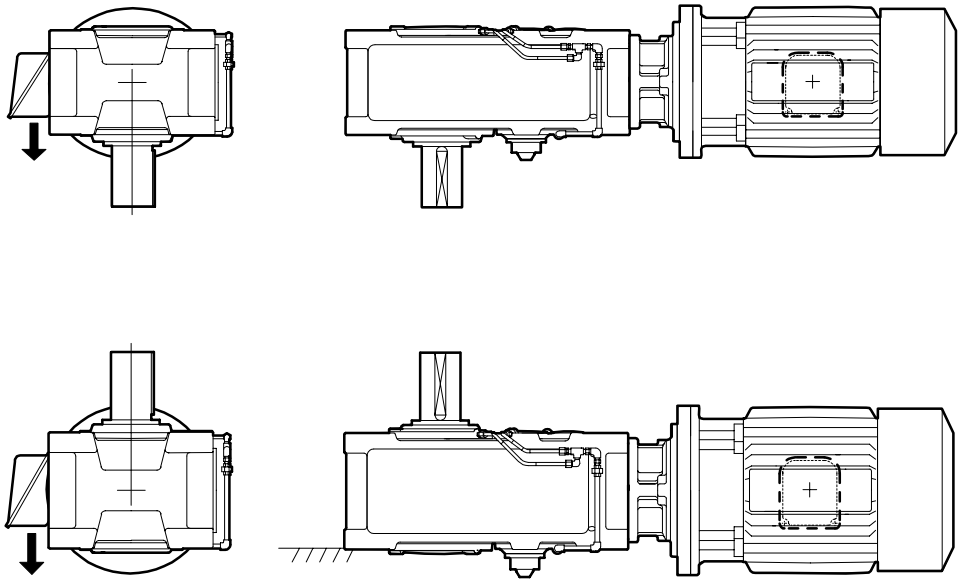

1.Direction shows lead wire outside of terminal box.
2.The terminal box mounting direction can be changed in units of 90 degin our factory.
Please specify the direction when placing an order.

Right Angle Shaft Upright Mounting

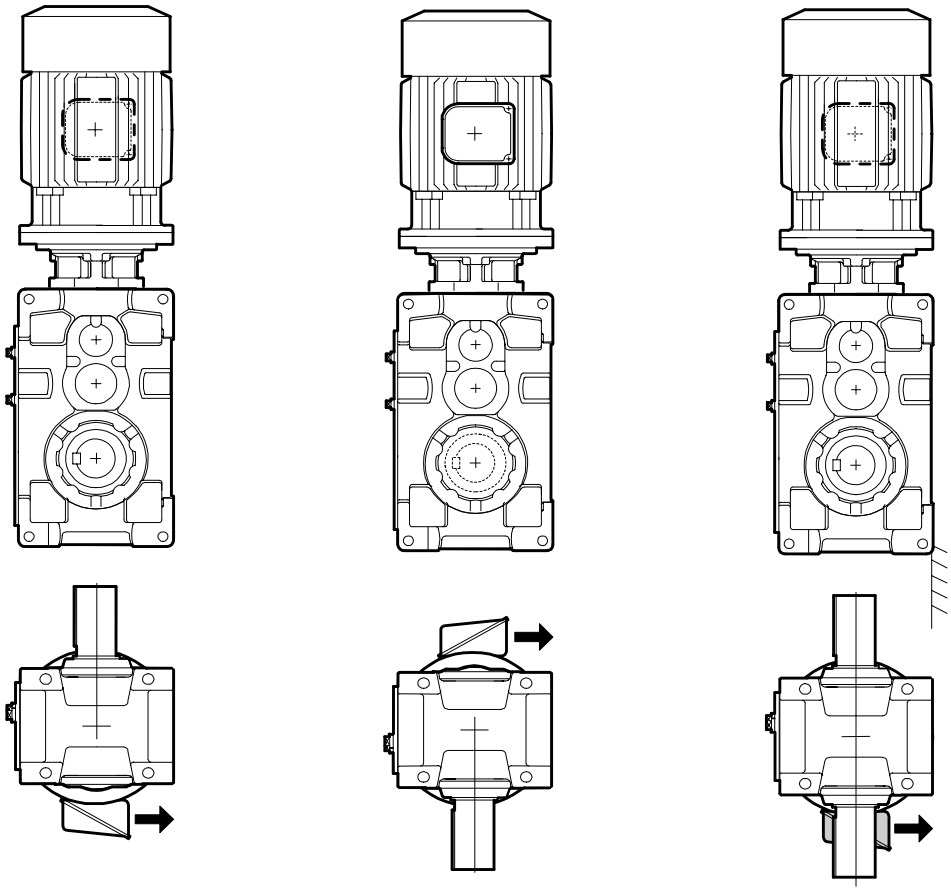

Parallel Shaft Vertical Mounting

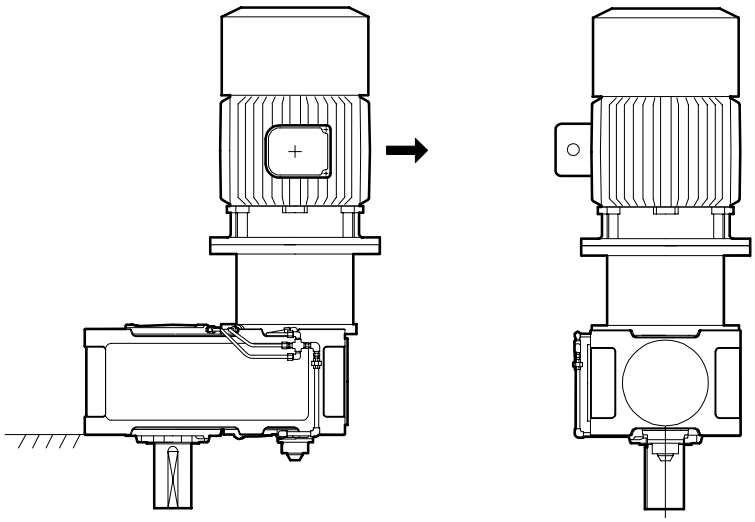

1.Direction shows lead wire outside of terminal box.
2.The terminal box mounting direction can be changed in units of 90 degin our factory.
Please specify the direction when placing an order.

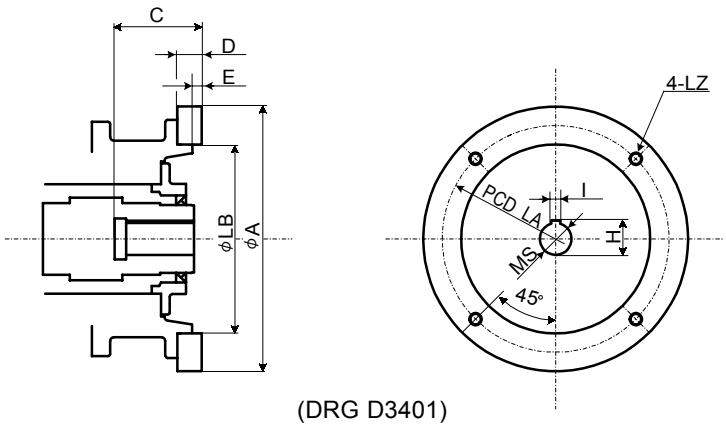

(DRG D3401)

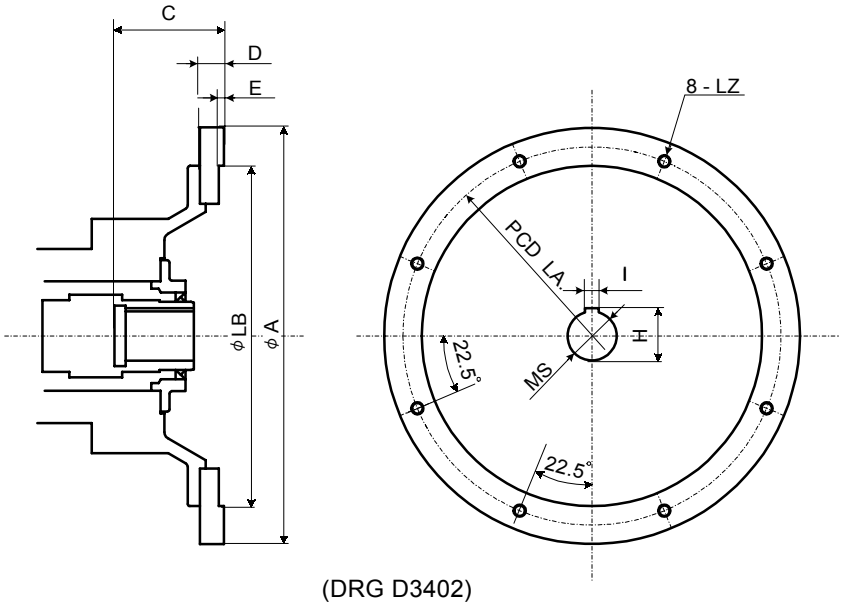

(DRG D3402)

(JEM Standard)

Kw × P	Motor Flame	A	LB	C	D	E	φMS	H	I	LA	LZ	Thread Length	Fig.
5.5 × 4P	132S	315	230	84	48	7	38	41.3	10	265	4-M12	22	D3401
7.5 × 4P	132M	315	230	84	48	7	38	41.3	10	265	4-M12	22	D3401
11 × 4P	160M	350	250	114	32	7	42	45.3	12	300	4-M16	32	D3401
15 × 4P	160L	350	250	114	32	7	42	45.3	12	300	4-M16	32	D3401
18.5 × 4P	180M	400	300	114	32	7	48	51.8	14	350	4-M16	32	D3401
22 × 4P	180M	400	300	114	32	7	48	51.8	14	350	4-M16	32	D3401
30 × 4P	180L	400	300	114	32	7	55	59.3	16	350	4-M16	32	D3401
37 × 4P	200L	450	350	144	48	7	60	64.4	18	400	8-M16	32	D3402
45 × 4P	200L	450	350	144	48	7	60	64.4	18	400	8-M16	32	D3402
55 × 4P	225S	550	450	144	32	7	65	69.4	18	500	8-M16	32	D3402

(IEC Standard)

Kw × P	Motor Flame	A	LB	C	D	E	φMS	H	I	LA	LZ	Thread Length	Fig.
5.5 × 4P	132S	315	230	84	48	7	38	41.3	10	265	4-M12	22	D3401
7.5 × 4P	132M	315	230	84	48	7	38	41.3	10	265	4-M12	22	D3401
11 × 4P	160M	350	250	114	32	7	42	45.3	12	300	4-M16	32	D3401
15 × 4P	160L	350	250	114	32	7	42	45.3	12	300	4-M16	32	D3401
18.5 × 4P	180M	350	250	114	32	7	48	51.8	14	300	4-M16	32	D3401
22 × 4P	180L	350	250	114	32	7	48	51.8	14	300	4-M16	32	D3401
30 × 4P	200L	400	300	114	32	7	55	59.3	16	350	4-M16	32	D3401
37 × 4P	225S	450	350	144	48	7	60	64.4	18	400	8-M16	32	D3402
45 × 4P	225M	450	350	144	48	7	60	64.4	18	400	8-M16	32	D3402
55 × 4P	250M	550	450	144	32	7	65	69.4	18	500	8-M16	32	D3402

1. Revolving Speed N(r/min), Velocity V(m/s)

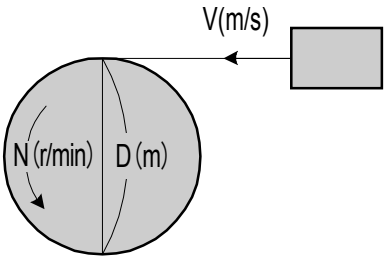

$$V = \pi \cdot D \cdot \frac{N}{60} \text{ (m/s)}$$

D : Wheel Diameter (m)

($\pi = 3.14$)

2. Torque T (Nm)

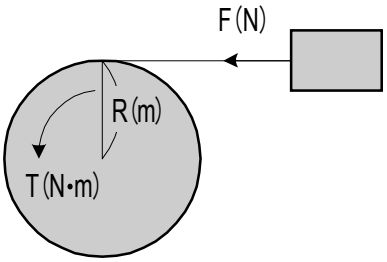

$$T = F \cdot R \text{ (N} \cdot \text{m)}$$

F : Load (N)

R : Wheel Radius (m)

3. Power P(kW)

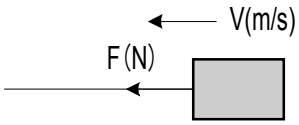

$$P = \frac{F \cdot V}{1000} \text{ (kW)}$$

F : Load (N)

V : Velocity (m/s)

4. Power P(kW), Torque T(Nm), Revolving Speed N(r/min)

$$P = \frac{N \cdot T}{9550} \text{ (kW)}, \qquad T = \frac{9550 \cdot P}{N} \text{ (N} \cdot \text{m)}$$

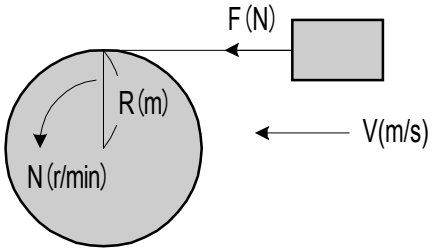

$$P = \frac{F \cdot V}{1000} \text{ (kW)} \qquad V = \pi \cdot 2 \cdot R \cdot \frac{N}{60} \text{ (m/s)}$$

$$\therefore P = \frac{F \cdot \pi \cdot 2 \cdot R \cdot \frac{N}{60}}{1000} = \frac{2 \cdot \pi}{1000 \times 60} \cdot N \cdot F \cdot R \text{ (kW)}$$

Since $T = F \cdot R$

$$P = \frac{2 \cdot \pi}{1000 \times 60} \cdot N \cdot T = \frac{N \cdot T}{9550} \text{ (kW)}$$

5. Acceleration Force F_A (N)

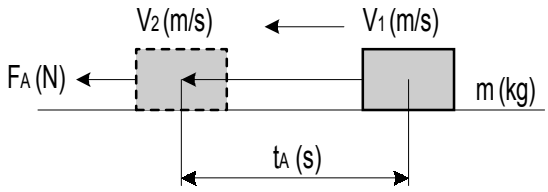

$$F_A = m \cdot \alpha = m \cdot \frac{V_2 - V_1}{t_A} \text{ (N)}$$

$$\alpha = m \cdot \frac{V_2 - V_1}{t_A}$$

m : Weight (kg)

α : Acceleration (m/s^2)

t_A : Acceleration Time (s)

6. Acceleration Torque T_A(Nm)

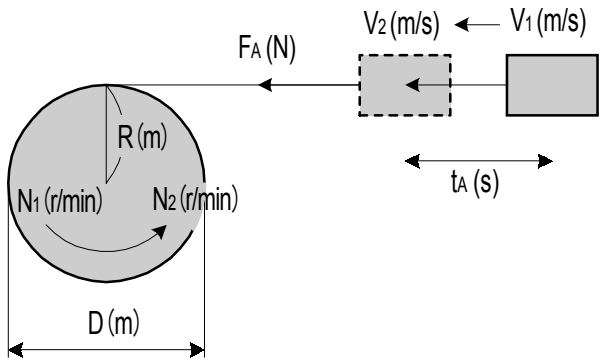

$$T_A = F_A \cdot R \ , \qquad F_A = m \cdot \frac{V_2 - V_1}{t_A}$$

$$V_2 = \pi \cdot D \cdot \frac{N_2}{60} \ , \qquad V_1 = \pi \cdot D \cdot \frac{N_1}{60} \ ,$$

$$D = 2 \cdot R$$

$$\therefore T_A = m \cdot \frac{\frac{\pi \cdot 2 \cdot R}{60}(N_2 - N_1)}{t_A} \cdot R$$

$$= \frac{2 \cdot \pi \cdot m \cdot R}{60} \cdot \frac{N_2 - N_1}{t_A} \cdot R$$

$$= \frac{m \cdot R^2}{9.55} \cdot \frac{N_2 - N_1}{t_A} \text{ (N} \cdot \text{m)}$$

Since $m \cdot R^2$ is J (Moment of Inertia : $kg \cdot m^2$)

$$T_A = \frac{J}{9.55} \cdot \frac{N_2 - N_1}{t_A} \text{ (N} \cdot \text{m)}$$

7. Synchronized Revolving Speed of AC Motor N_0(r/min)

$$N_0 = \frac{120 \cdot f}{P} \text{ (r/min)}$$

f : Power Supply Frequency (Hz)

P : No. of motor Poles

8. Rated Revolving Speed of AC Motor N(r/min)

$$N = N_0(1 - S) \text{ (r/min)}$$

N_0: Synchronized Revolving Speed (r/min)

S : Slippage

Warranty

Warranty Period	The warranty period for the Products shall be 18 months after the commencement of delivery or 18 months after the shipment of the Products from the seller's works or 12 months from the Products coming into operation, whether comes first.
Warranty Condition	In Case that any problems, troubles or damages on the Products arise due to the defects in the Products during the above "Warranty Period" , although the Products are appropriately and properly installed in, connected or combined to the equipment or machines, or maintained in accordance with the maintenance manual and are properly operated under the conditions as described in the catalogue or otherwise as agreed upon in writing between the Seller and the Buyer or its customers, the Seller will Provide, at its sole discretion, appropriate repair or replacement on the Products free of charge, except as stipulated in the "Exception for Warranty" as described below. However, in the event that the Products is installed in, connected or combined to or integrated into the equipment or machines, the Seller shall not reimburse the costs for removal or re-installation of the Products or other incidental costs related thereto and any lost opportunity, loss of profit or any other incidental or consequential losses or damages incurred by the Buyer or its customers.
Exception for Warranty	Notwithstanding the above warranty, the warranty as set forth herein shall not be applied to the problems, troubles or damages on the Products which are caused by: 1. installations, connections, combinations or integration of the Products in or to the other equipment or machines, which are rendered by any person or entity other than the Seller, 2. the insufficient maintenance or improper operation by the Buyer or its customers, such that the Product is not appropriately maintained in accordance with the maintenance manual provided or designated by the Seller, 3. the improper use or operation of the Products by the Buyer or its customers which are not informed to the Seller, including, without limitation, the Buyer's or its customers' operation of the Products not in conformity with the specifications, or use of the lubrication oil in the Products which is not recommended by the Seller, 4. troubles, problems or damages on any equipment or machines in or to which the Products are installed, connected or combined or installed, or any specifications particular to the Buyer or its customers, or 5. any changes, modifications, improvements or alterations on the Products or those functions which are rendered on the Products by any person or entity other than the Seller, 6. any parts in the Products which are supplied or designated by the Buyer or its customers, 7. earthquake, fire, flood, sea-breeze, gas, thunder, acts of God or any other reasons beyond the control of the Seller, 8. waste, exhaustion, normal tear or ware, or deterioration on the parts of the Products, such as bearing, oil-seal. 9. any other troubles, problems or damages on the Products which are not attributable to the Seller.